Service Guide

020-102263-02

CP2208-LP

CHRISTIE®

NOTICES

COPYRIGHT AND TRADEMARKS

GENERAL

Every effort has been made to ensure accuracy, however in some cases changes in the products or availability could occur which may not be reflected in this document. Christie reserves the right to make changes to specifications at any time without notice. Performance specifications are typical, but may vary depending on conditions beyond Christie's control such as maintenance of the product in proper working conditions. Performance specifications are based on information available at the time of printing. Christie makes no warranty of any kind with regard to this material, including, but not limited to, implied warranties of fitness for a particular purpose. Christie will not be liable for errors contained herein or for incidental or consequential damages in connection with the performance or use of this material. Canadian manufacturing facility is ISO 9001 and 14001 certified.

WARRANTY

Products are warranted under Christie's standard limited warranty, the complete details of which are available by contacting your Christie dealer or Christie. In addition to the other limitations that may be specified in Christie's standard limited warranty and, to the extent relevant or applicable to your product, the warranty does not cover:

a. Problems or damage occurring during shipment, in either direction.

b. Problems or damage caused by combination of a product with non-Christie equipment, such as distribution systems, cameras, DVD players, etc., or use of a product with any non-Christie interface device.

c. Problems or damage caused by misuse, improper power source, accident, fire, flood, lightning, earthquake, or other natural disaster.

d. Problems or damage caused by improper installation/alignment, or by equipment modification, if by other than Christie service personnel or a Christie authorized repair service provider.

e. Use of third party product enclosures for environmental protection during outside use must be approved by Christie.

f. Problems or damage caused by use of a product on a motion platform or other movable device where such product has not been designed, modified or approved by Christie for such use.

g. Except where the product is designed for outdoor use, problems or damage caused by use of the product outdoors unless such product is protected from precipitation or other adverse weather or environmental conditions and the ambient temperature is within the recommended ambient temperature set forth in the specifications for such product.

h. Defects caused by normal wear and tear or otherwise due to normal aging of a product.

The warranty does not apply to any product where the serial number has been removed or obliterated. The warranty also does not apply to any product sold by a reseller to an end user outside of the country where the reseller is located unless (i) Christie has an office in the country where the end user is located or (ii) the required international warranty fee has been paid.

The warranty does not obligate Christie to provide any on site warranty service at the product site location.

PREVENTATIVE MAINTENANCE

Preventative maintenance is an important part of the continued and proper operation of your product. Failure to perform maintenance as required, and in accordance with the maintenance schedule specified by Christie, will void the warranty. For preventative maintenance schedules, refer to *www.christiedigital.com*.

REGULATORY

The product has been tested and found to comply with the limits for a Class A digital device, pursuant to Part 15 of the FCC Rules. These limits are designed to provide reasonable protection against harmful interference when the product is operated in a commercial environment. The product generates, uses, and can radiate radio frequency energy and, if not installed and used in accordance with the instruction manual, may cause harmful interference to radio communications. Operation of the product in a residential area is likely to cause harmful interference in which case the user will be required to correct the interference at the user's own expense.

CAN ICES-3 (A) / NMB-3 (A)

이 기기는 업무용(A급)으로 전자파적합등록을 한 기기이오니 판매자 또는 사용자는 이점을 주의하시기 바라며, 가정 외의 지역에서 사용하는 것을 목적으로 합니다.

ENVIRONMENTAL

The product is designed and manufactured with high-quality materials and components that can be recycled and reused. This symbol means that electrical and electronic equipment, at their end-of-life, should be disposed of separately from regular waste. Please dispose of the product appropriately and according to local regulations. In the European Union, there are separate collection systems for used electrical and electronic products. Please help us to conserve the environment we live in!

Content

Introduction

This document provides technical information for assisting Christie qualified technicians in the servicing of the CP2208-LP projector.

Every effort has been made to make sure the information in this document is accurate and complete. However, due to continuing research all information is subject to change without notice. Christie assumes no responsibility for omissions or inaccuracies.

Projector components (front)

Learn about the components on the front of the projector.

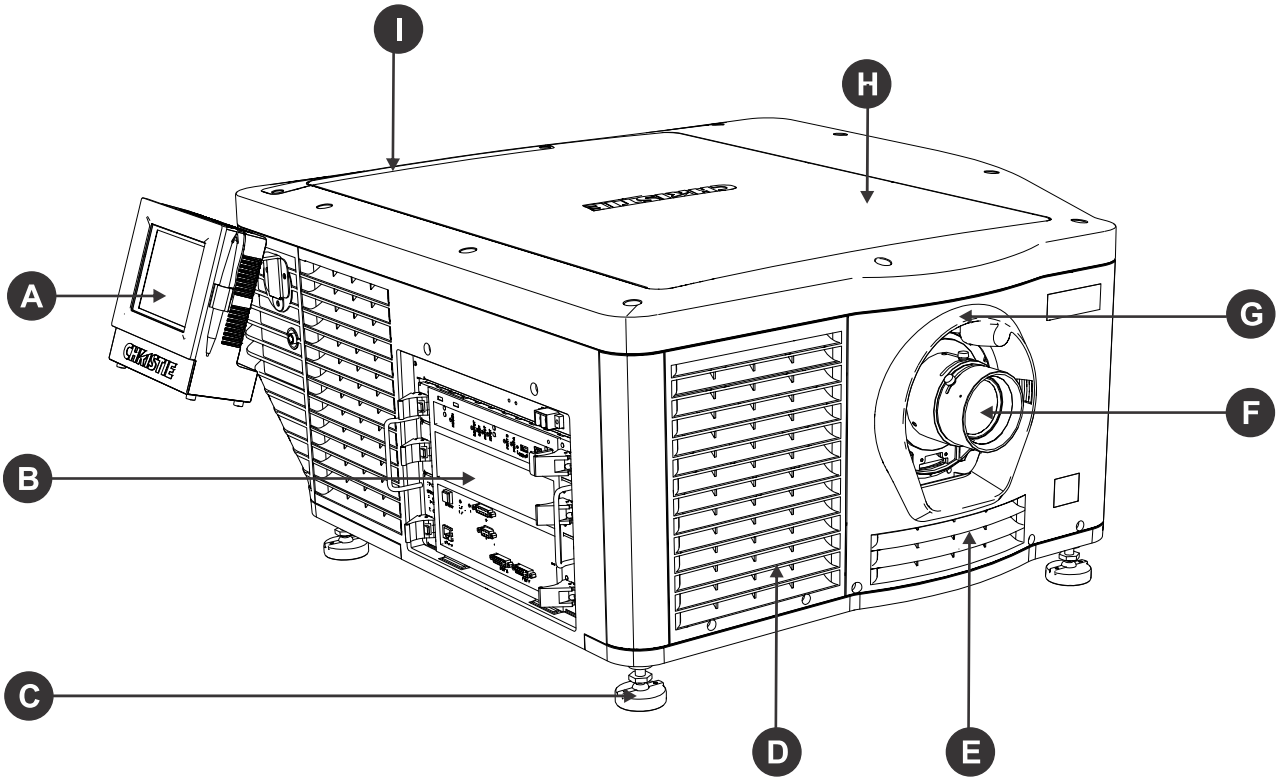

A	Touch panel controller (TPC) A touch-sensitive screen used to control the projector.
B	Communications panel External devices are *connected* (on page 28) here.
C	Adjustable feet Turn the adjustable feet to increase or decrease the projector height.

D	Air filter
E	Air intake with air filter behind it.
F	Projector lens A list of available lenses is available in the *projector specifications* (on page 88).
G	Lens surround
H	Top skin
I	Air filter

Projector components (rear)

Learn about the components on the back of the projector.

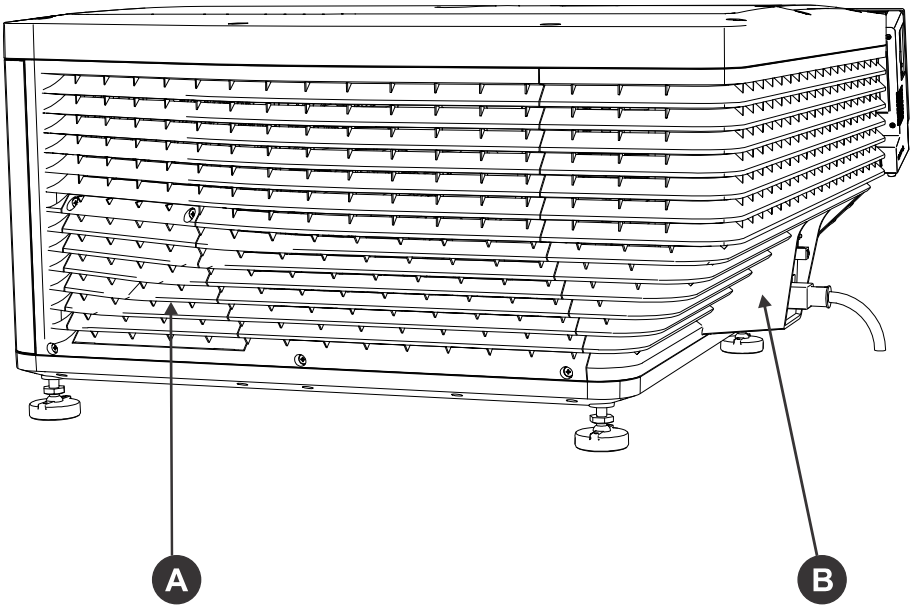

A	Service access door
B	Power cord and AC receptacle

Service guidelines

Review safety guidelines and information required for replacing modules.

Ordering parts

When ordering replacement parts, quote the part numbers of the items required. Quote the projector model number, serial number, and date of manufacture, as indicated on the license label.

Not all parts are available separately. In addition, some parts stocked as inventory are available only until the current supply lasts.

All part numbers are subject-to-change.

Replacing modules

To ensure you have the correct module and the projector module is replaced correctly, check module markings, parts lists, and the relevant disassembly and replacement procedures.

Components must be replaced with exact equivalents or Christie approved replacement parts. Failure to do so may result in unsafe operation.

Interconnections and line drawings

The interconnect diagram illustrates the path of electrical connections between modules. Manufacturer's part numbers are included. Part numbers are subject to change.

Line drawings provide projector dimensions and sizes for installation.

To download the latest interconnect diagram or line drawings, visit *www.christiedigital.com*.

Servicing live equipment

Only Christie accredited technicians who are knowledgeable about the hazards associated with hazardous voltage, ultraviolet exposure, and high temperatures are authorized to assemble, install, and service Christie equipment.

To make sure you remain safe when servicing energized (live) Christie equipment:

- Locate the main AC power shut off prior to servicing the equipment. This will allow you to turn the power off quickly in an emergency.
- Disconnect the projector from the communication and management network so it cannot receive commands to turn the light source on, open the shutter, and move the lens.
- Familiarize yourself with all potential safety hazards prior to servicing the equipment. This includes, but is not limited to, the location and accessibility of hazardous voltages.

- Read and understand all written procedures prior to commencing a service procedure.
- Understand and follow all local safety codes and requirements when servicing energized (live) equipment.
- Perform equipment service in a location free of obstructions and other hazards. For example, you must have an unobstructed view of the area being serviced.

Wear personal protective equipment (PPE) clothing appropriate to the service you are performing. This includes, but is not limited to, protective (electrically insulated) footwear, safety glasses, and gloves rated for the working voltage of the equipment you are servicing.

Important safeguards

To prevent personal injury and to protect the device from damage, read and follow these safety precautions.

General safety precautions

Read all safety and warning guidelines before servicing the projector.

Warning! If not avoided, the following could result in death or serious injury.

- TRIP OR FIRE HAZARD! Position all cables where they cannot contact hot surfaces, be pulled, be tripped over, or damaged by persons walking on or objects rolling over the cables.
- This product must be installed within a restricted access location not accessible by the general public.
- Only personnel who are trained on the precautions for the restricted access location can be granted entry to the area.
- Install the product so users and the audience cannot enter the restricted area at eye level.
- ELECTRICAL and BURN HAZARD! Use caution when accessing internal components.
- High leakage current present when connected to IT power systems.
- PERMANENT/TEMPORARY BLINDNESS HAZARD! No direct exposure to the beam must be permitted. RG3 IEC 62471:2006.
- PERMANENT/TEMPORARY BLINDNESS HAZARD! Operators must control access to the beam within the hazard distance or install the product at the height that prevents exposure of spectators' eyes within the hazard distance. The hazard zone must be no lower than 2.5 meters (US installations) or 2.0 meters (global installations) above any surface upon which any persons are permitted to stand and the horizontal clearance to the hazard zone must be a minimum 1.0 meters.
- Possible hazardous optical radiation emitted from this product. (Risk group 3 under IEC 62471)
- For protection from ultraviolet radiation, keep all product housings intact during operation.
- FIRE AND SHOCK HAZARD! Use only the attachments, accessories, tools, and replacement parts specified by Christie.
- A minimum of four people or appropriately rated lift equipment is required to safely lift, install, or move the product.
- Always install safety straps when the frame and projector are installed overhead.
- Christie products must be installed and serviced by Christie qualified technicians.
- Only Christie qualified technicians who are knowledgeable about the hazards associated with laser use, high-voltage, and high temperatures generated by the product are authorized to assemble, install, and service the Christie Laser Projection System.
- Do not operate the cinema projector without all of its covers in place.

AC/power precautions

Read all safety and warning guidelines before connecting to AC power.

Warning! If not avoided, the following could result in death or serious injury.

- SHOCK HAZARD! Only use the AC power cord provided with the product or recommended by Christie.
- FIRE AND SHOCK HAZARD! Do not attempt operation unless the power cord, power socket, and power plug meet the appropriate local rating standards.
- SHOCK HAZARD! Do not attempt operation if the AC supply is not within the specified voltage and current, as specified on the license label.
- SHOCK HAZARD! The AC power cord must be inserted into an outlet with grounding.
- SHOCK HAZARD! A dedicated, protected ground or earth wire must be installed on the product by Christie qualified technicians or electricians before it can be connected to power.
- SHOCK HAZARD! Disconnect the product from AC before installing, moving, servicing, cleaning, removing components, or opening any enclosure. Inputs A and B must be removed prior to servicing.
- Install the product near an easily accessible AC receptacle.

Caution! If not avoided, the following could result in minor or moderate injury.

- FIRE HAZARD! Do not use a power cord, harness, or cable that appears damaged.
- FIRE OR SHOCK HAZARD! Do not overload power outlets and extension cords.
- SHOCK HAZARD! Power supply uses double pole/neutral fusing. Disconnect all power sources before opening the product.
- Only Christie qualified technicians are permitted to open product enclosures.

Light intensity hazard distance

This projector has been classified as Risk Group 3 as per the IEC 62471:2006 standard due to possible hazardous optical and thermal radiation being emitted.

Warning! If not avoided, the following could result in serious injury.

- PERMANENT/TEMPORARY BLINDNESS HAZARD! No direct exposure to the beam must be permitted. RG3 IEC 62471:2006.
- PERMANENT/TEMPORARY BLINDNESS HAZARD! Operators must control access to the beam within the hazard distance or install the product at the height that prevents exposure of spectators' eyes within the hazard distance. The hazard zone must be no lower than 2.5 meters (US installations) or 2.0 meters (global installations) above any surface upon which any persons are permitted to stand and the horizontal clearance to the hazard zone must be a minimum 1.0 meters.
- EXTREME BRIGHTNESS! Do not place reflective objects in the product light path.

The following diagram and table show the zones for ocular and skin hazard distances:

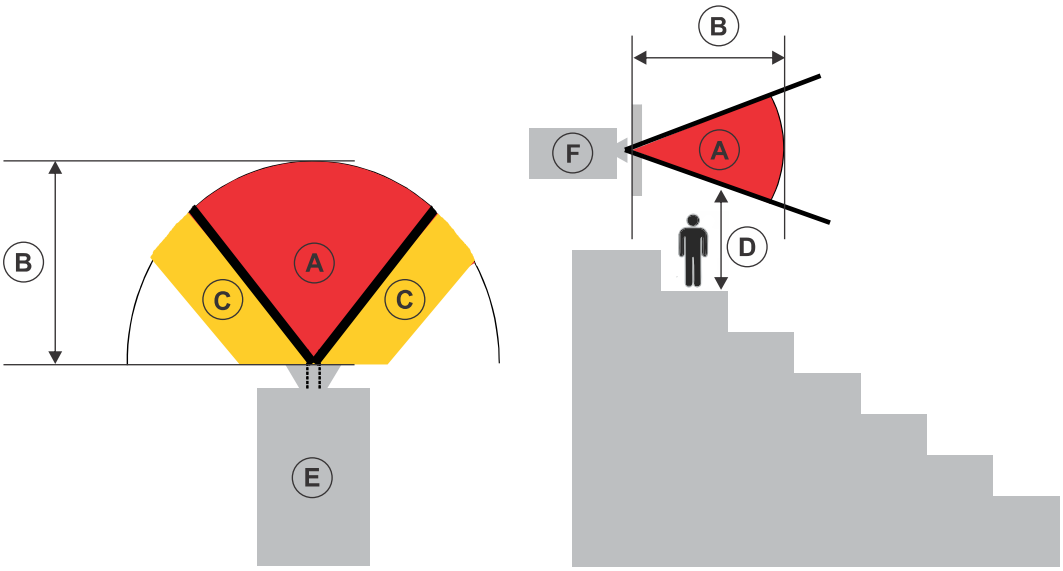

- A—Hazard zone. The region of space where the projection light from the laser-illuminated projector is above emission limits for Risk Group 2. The light intensity may cause eye damage after a momentary or brief exposure (before a person can avert his or her eyes away from the light source). The light may cause skin burns to occur.
- B—Hazard distance. Operators must control access to the beam within the hazard distance or install the product preventing potential exposure of the spectators' eyes from being in the hazard distance.
- C—No access zone. Horizontal clearance of the no access zone must be a minimum of 1.0 meters.
- D—Vertical distance to hazard zone. The hazard zone must be no lower than 2.5 meters (US installations) or 2.0 meters (global installations) above any surface upon which any persons are permitted to stand.
- E—Represents the top view of the projector.
- F—Represents the side view of the projector.

For US market only, hazard distances based upon FDA guidance document 1400056, *Classification and Requirements for Laser Illuminated Projectors (LIPs)*, dated February 18, 2015:

Projection lens	Part number	Hazard distance (m)
1.2-1.72:1, 0.69" DLPCine zoom lens	108-494108-XX	1.6
1.33-2.1:1, 0.69" DLPCine zoom lens	108-495109-XX	2.2
1.62-2.7:1, 0.69" DLPCine zoom lens	108-496100-XX	3.0
2.09-3.9:1, 0.69" DLPCine zoom lens	108-497101-XX	4.4

For all other markets, hazard distances based upon IEC 62471-5:2015, *Photobiological safety of lamps and lamp systems – Part 5: Image projectors*:

Projection lens	Part number	Hazard distance (m)
1.2-1.72:1, 0.69" DLPCine zoom lens	108-494108-XX	0.8
1.33-2.1:1, 0.69" DLPCine zoom lens	108-495109-XX	1.0
1.62-2.7:1, 0.69" DLPCine zoom lens	108-496100-XX	1.3
2.09-3.9:1, 0.69" DLPCine zoom lens	108-497101-XX	1.9

For Installations in the United States

The following must be in place for laser-illuminated projector installations in the United States:

- The projection room shall be clearly identified by the posting of laser warning and restricted access signs. The projection room sign must display the warning "No direct exposure to beam shall be permitted".
- The Christie Laser Projection System Installation Checklist must be fully completed after the installation and sent to *lasercompliance@christiedigital.com*. A copy can remain on-site. This checklist can be found as a separate document in the accessory box with the manual.
- If installing in the US states of Arizona, Florida, Georgia, Illinois and Massachusetts, go to *www.christiedigital.com* for additional regulatory requirements.

Product labels

Learn about the labels that may be used on the product. Labels on your product may be yellow or black and white.

General hazards

Hazard warnings also apply to accessories once they are installed in a Christie product that is connected to power.

Fire and Shock Hazard	
	To prevent fire or shock hazards, do not expose this product to rain or moisture. Do not alter the power plug, overload the power outlet, or use it with extension cords. Do not remove the product enclosure. Only Christie qualified technicians are authorized to service the product.

Electrical Hazard	
	Risk of electric shock. Do not remove the product enclosure. Only Christie qualified technicians are authorized to service the product.

General hazard.

Electric shock hazard. To avoid personal injury, disconnect all power sources before performing maintenance or service.

Electrocution hazard. To avoid personal injury, always disconnect all power sources before performing maintenance or service procedures.

Hot surface hazard. To avoid personal injury, allow the product to cool for the recommended cool down time before performing maintenance or service.

Pinch hazard. To avoid personal injury, keep hands clear and loose clothing tied back.

Fan hazard. To avoid personal injury, keep hands clear and loose clothing tied back. Always disconnect all power sources before performing maintenance or service procedures.

Voltage hazard. To avoid personal injury, always disconnect all power sources before performing maintenance or service procedures.

Not for household use.

Mandatory action

Disconnect all power sources before performing maintenance or service procedures.

Consult the user manual.

Consult the service manual.

Electrical labels

Indicates the presence of a protective earth ground.

Indicates the presence of an earth ground.

Additional hazard labels

Indicates a light hazard. Do not look directly into the lens. The extreme high brightness can cause permanent eye damage. RG3 IEC 62471-5:2015

Laser labels

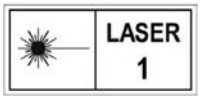

CLASS 1 LASER PRODUCT IEC 60825-1

Service setups

Understand the special internal hardware and software adjustments and related details that may require the attention of a qualified service technician, whether done periodically or after a specific module replacement.

Turning the projector on

The projector is turned on using the touch panel controller (TPC).

Warning! If not avoided, the following could result in death or serious injury.

- SHOCK HAZARD! Do not attempt operation if the AC supply is not within the specified voltage and current, as specified on the license label.

1. Ensure that the circuit breaker for the projector is on.
2. On the TPC, tap and hold **Power On**.

Turning the projector off

Complete the following procedure to turn off the projector.

1. On the touch panel controller (TPC), to turn off the light source, tap and hold **Light Off**.
2. Tap and hold **Power Off**.
   The projector enters a cool down mode and the fans and electronics stay on for 5 minutes. After this cool down period, the projector enters standby mode.
3. If you are servicing the projector or removing the protective cover, disconnect the AC power and turn the breaker off.

Adjusting the fold mirror

Learn how to align the fold mirror with the optical system to correct an image with missing or shadowy corners or edges.

1. *Remove the top skin.* (on page 33)
2. *Display the RGB-12bit-Full Screen White test pattern.* (on page 87)
3. Note the location of the following screws:

Screw	Description	Location
A	First set screw	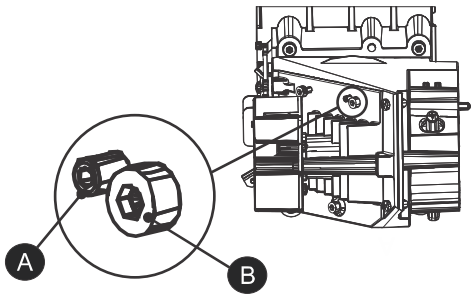
B	First cap screw	
C	Second set screw	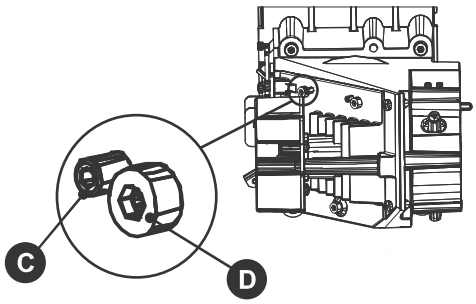
D	Second cap screw	

4. Using a hex driver, loosen screws A and C.
5. Using a hex driver, adjust screws B and D until the black corners on the image are removed.
6. Tighten screws A and C.
7. Replace the top skin.

Calibrating the yellow notch filter color

Complete this procedure whenever the yellow notch filter is moved or replaced, or when a new illumination optics system (IOS) is installed.

1. Set up a colorimeter in front of the viewing screen and aim it at the center of the screen.
2. *Remove the top skin* (on page 33).
3. Remove the screw holding the yellow notch filter cover.
4. Loosen the lock screw and move the yellow notch filter backward or forward.
5. Create a measured color gamut data (MCGD) file.
   a) Turn on the light source and allow it to operate for 20 minutes.
   b) On the touch panel controller (TPC), tap **Menu** > **Advanced Setup** > **MCGD File Setup**.
   c) Tap **Save As**.
   d) In the **Filename** field type a name for the MCGD file.
   e) Tap **OK**.
   f) To display the red test pattern, in the red area of the chromaticity image tap the option button.
   g) Measure the red chromaticity with the colorimeter.
   h) Record the red chromaticity value.

i) Repeat steps f to h for the green, blue, white, and black chromaticity measurements. Select the test pattern that matches the color you are measuring.

j) Enter the chromaticity measurements you recorded in step 7 in the red, green, blue, white, and black **x** and **y** fields.

k) If the MCGD file will be associated with a 3D channel, tap **Enable 3D** and select a frame rate.

l) Tap **Save**.

6. Create a channel that includes the new MCGD file.

a) Tap **Menu** > **Channel Setup**.

b) From the Channel Name list, select a channel.

c) Tap the **Launch Dialog** ( ) icon.

a) Enter a name for the channel and tap **Enter**.

b) On the Config 1 screen, complete the following fields:

Field	Description
Icon	The icon associated with the channel.
Input	The location or connection for the current input.
Data Format	The source color depth (8-10-12 bit) for the channel.
Source File	The resolution and aspect ratio for the channel.
Screen File	The screen type, masking, cropping, and lens settings for the channel.
Use PCF	Associates the channel with a projector configuration file (PCF) and prevents channel adjustments.
PCF	The PCF file associated with the channel.
Light File	The light file associated with the channel. To edit the light file settings, tap the **Launch Dialog** icon. Any changes made to the light file settings are applied to all channels that use this light file.
ILS File	The intelligent lens system (ILS) file associated with the channel. The ILS file automatically adjusts the lens position so the content displays correctly. To edit ILS file settings, tap the **Launch Dialog** icon. Any changes made to the ILS file settings are applied to all channels that use this ILS file.

c) In the left pane, tap **Config 2**.

d) Complete the following fields:

Field	Description
Measured Color	The measured color gamut data (MCGD) file you created in step 5..

Field	Description
Target Color	The target color gamut data (TCGD) value. Select **Color Verification**.
Color Space	The method of color decoding for the current source. The default is YCbCr for all DVI sources. The default for all cinema sources is Unity RGB. This option is not available when Use PCF is selected in the Config 1 screen.
Gamma	The gamma correction required for the proper tonal range of the source material. This option is not available when Use PCF is selected in the Config 1 screen.
LUT_CLUT	Applies a 3D color cube for increased color accuracy. This option is not available when Use PCF is selected in the Config 1 screen.
Scan Type	The video scan type. The default is **Progressive**.
Automatic Scan Type Detection	Automatically performs scan type detection. This feature is supported for PIBS1 inputs only.
Use PCT	Applies Christie Pureformity Color Technology (PCT) to the channel.
PCT File	Identifies the Christie Pureformity Color Technology (PCT) file associated with the channel.
HDMI EDID Type	Identifies the extended display identification data (EDID) type used by the channel when playing content from a device connected to the HDMI A/LEFT or HDMI B/RIGHT ports.
Enable 3D Dual Measured Color	Enables 3D Dual Measured Color on the channel. Select the color files for the left and right eyes.

e) If the channel is being created to display 3D content, tap **3D Control** in the left pane.

f) Complete the following fields:

Field	Description
Enable 3D	Enables 3D.
3D Test Patterns	Displays 3D test patterns.
3D Sync Input Mode	Specifies whether a specific frame of input data has left eye or right eye data. Select **Use White Line Code (true and inverted)** if you are using a single 3D input signal in which an embedded white line at the bottom of each frame identifies left and right, and an additional separate 3D stereo sync input at the GPIO port is not present. The bottom row of the left-eye sub-field should be pure white for the left-most 25% of the pixel row and pure black for the remainder of the row. The bottom row of the right-eye sub-field should be pure white for the left-most 75% of the pixel row and pure black for the remainder of the row.

Field	Description
	Select **Use Line Interleave for 3D source data only**. When specified, the ICP will de-interleave each line into the left image or right image in memory as specified. Line interleave can be used with PsF 3D data (left and right data for one field, then left and right data for second field).
L/R Display Reference	Specifies which frame of eye data to display during a specific display frame. This signal is referenced to the display frame rate which is specified by the Frame Rate N:M.
Frame Rate N:M	Sets how many frames to display per number of frames that form one complete image. Increase the display frame rate to reduce flicker from your source(s).
L/R Display Sequence	Defines the frame order (L-R or R-L) required for 3D perspective. This option only has meaning when the Frame Rate factor M is equal to 2. For this case, two input frames of data are required to constitute a complete frame of image data. This parameter tells the system which frames go together to make a complete image. When using Line Interleave as the 3D Sync Input Mode, ensure that Left (L1R1 L2R2) is selected.
3D Sync Polarity	Keeps 3D stereo sync output the same as input (true) or reversed (inverted). True: 3D L/R sync output from GPO will match L/R sync input. Inverted: 3D L/R sync output from GPO will be the opposite of sync input (left = right, right = left).
Dark Time	Creates a blank time interval between left and right frames to allow for LCD shutter glasses, Z screen, or rotating 3D wheel to synchronize the output. See Dark Time and Output Delay Notes below. Values between 0 and 65535 are accepted. To enter the dark time value, tap the **Launch Dialog** ( ) icon.
Output Delay	The non-image time in Microseconds (µ). Offset 3D stereo sync output in relation to dark time interval. Acceptable values are between -32768 and 32767 are accepted where a positive offset = delay and negative offset = start early. To enter the output delay value, tap the **Launch Dialog** ( ) icon.
Phase Delay	The degree of reference between the left and right sync output. Values between -180 and 180 are accepted. To enter the phase delay value, tap the **Launch Dialog** ( ) icon.

g) To activate the channel, tap **Activate**.

7. *Display the RGB-12bit-Full Screen White test pattern* (on page 87).

8. Measure the color point of the pattern with the colorimeter and verify the values:

Color	X	Y	Tolerance
Red	0.640	0.320	+/- 0.002
Green	0.280	0.640	
Blue	0.160	0.100	
White	0.314	0.351	

If the values are outside the tolerances, check the MCGD values are correct, the channel was created correctly, or reposition the yellow notch filter. If these corrective measures do not work, replace the yellow notch filter. Repeat the entire procedure for each corrective action you attempt.

9. Repeat steps 7 and 8 for the RBG-12bit-Full Screen Red, Green, and Blue test patterns.
10. Replace the yellow notch filter cover.
11. Replace the top skin.

Adjusting DMD convergence

A convergence problem occurs when one or more projected colors (red, green, blue) appears misaligned.

The projector uses three separate digital micromirror device (DMD) panels to produce three separate red, green, and blue image components. To ensure the most accurate color representation across the whole image, adjust the convergence to perfectly align the three panels so that all pixels line up. Read this entire section before adjusting convergence.

Notice. If not avoided, the following could result in property damage.

- Do not operate the product while performing convergence with the light engine fan pack or cooling duct removed. This causes overheating of the satellite formatter board FPGAs.

Preparing for convergence

Ensure the following tasks are completed before performing a convergence adjustment.

- Reset the red, green, and blue digital micromirror device (DMD) values to their default settings:
  - On the touch panel controller (TPC), tap **Menu** > **Service Setup** > **Digital Convergence** > **Default**.
- Make sure the projected image is centered and focused on the screen. If it is not, *adjust the boresight* (on page 65).
- Make sure a prime lens is installed. Do not use an anamorphic or wide converter lens when adjusting convergence.
- Configure the projector for maximum usable brightness for the installed application:
  - 14 FL for standard 2D
  - ~25-30 FL for single projector 3D with a silver screen
- Operate the projector for 15 minutes or longer.

- Monitor the prism temperature during the convergence adjustment and keep it within a few degrees of the nominal temperature. Lower the light module power to reduce the temperature.
- Set the active screen file to **2048 x 1080 no crop** to prevent any scaling of your reference test pattern.
- Use a 2.5 mm driver with heat-shrink tubing (2.0 inch and 6.5 inch lengths).

Evaluating the convergence

Before completing the convergence adjustment, evaluate the current convergence.

1. *Display the DC2K Framing test pattern* (on page 87).
2. Turn the zoom adjustment ring on the lens until the entire outer edge of the test pattern frame fits the screen.
3. Using the horizontal and vertical white lines, check the convergence issues one color at a a time.
4. Look for twist using the center vertical and horizontal lines—scan from one side of the screen to the other, observing any change in vertical position of the color in question relative to the point where you started.

   In the following example, red is twisted counterclockwise and blue is high and to the left with no apparent twist.

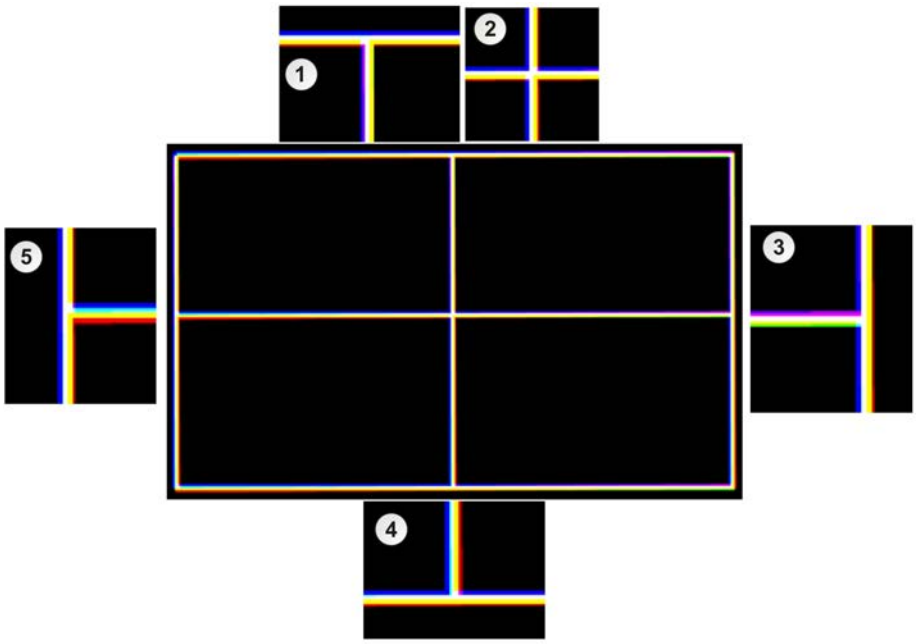

1. **Top Center:** Note Yellow to the right, Magenta/Blue to the left and Yellow in the middle. This shows that Blue is separated from Green to the left. Blue above shows that Blue is higher than both Green and Red.

2. **Center:** Shows that Blue is high and to the left and Red is twisted.

3. **Right Side:** Note Blue to the left, Yellow to the right and White in the middle. This shows that Blue is separated from Green to the left. Compare to Left Side, where Magenta is to the top on the right, Red is on the Bottom to the left. This is evidence of counter-clockwise twist in Red and that Blue is high.

4. **Bottom Center:** Note Blue to left, Yellow/Red to the right, Cyan in the middle. This shows that Blue is separated from Green to the left and upward. Compare to Top Center where Red is to the right on the bottom, to the left on the top. This is evidence of counter-clockwise twist.

5. **Left Side:** Note Blue to the left, Yellow/Red to the right and White in the middle. This shows that Blue is separated from Green to the left. Compare to the Right Side where Red is to the bottom on the left, Magenta is on the top to the right. This is evidence of counter-clockwise twist in Red and that Blue is high.

Adjusting the forematter board convergence

The red and green formatter boards are identical in design and adjuster function, but red cannot be adjusted due to space limitations. The blue formatter board physical design is different, but the adjustment functions are the same. The vertical and twist adjustments work together on the horizontal axis.

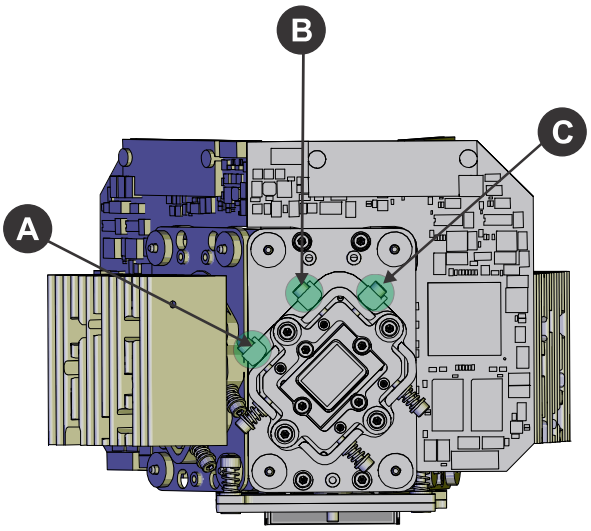

Screen/screw	A	B	C
↻	↺	↻	N/A
↺	↻	↺	N/A
⇧	↺	↺	N/A
⇩	↻	↻	N/A
⇦	N/A	N/A	↻
⇨	N/A	N/A	↺

Do not apply excessive force on the adjustment screws. This might cause the convergence adjustment to become misaligned after you remove the adjustment tool.

The physical layout of the formatter boards determines the behavior of the twist and vertical adjustments:

- The vertical adjustment screw and twist adjustment screw interact with each other such that if one is turned in the opposite direction of the other, the twist is affected.
- If both screws are turned equal amounts in the same direction, the image moves vertically.
- The horizontal adjustment screw is independent of the vertical and twist adjustments.

You do not always have to turn the screws simultaneously. However, if you adjust one screw at a time you will need to complete an equal or equal and opposite turn on the other screw to prevent binding and to achieve the correct adjustment.

Evaluating the convergence adjustments

After completing the convergence adjustments, check the test pattern.

The test pattern should have the following characteristics:

- The center area should be perfectly aligned and display solid white pixels.
- The red color should be evenly spaced one quarter to one half a pixel out all the way around the outer area and display cyan (green+blue) toward the center of the screen.
- The green and blue colors should always be perfectly aligned to each other (to within one quarter of a pixel total in one or a combination of directions.).

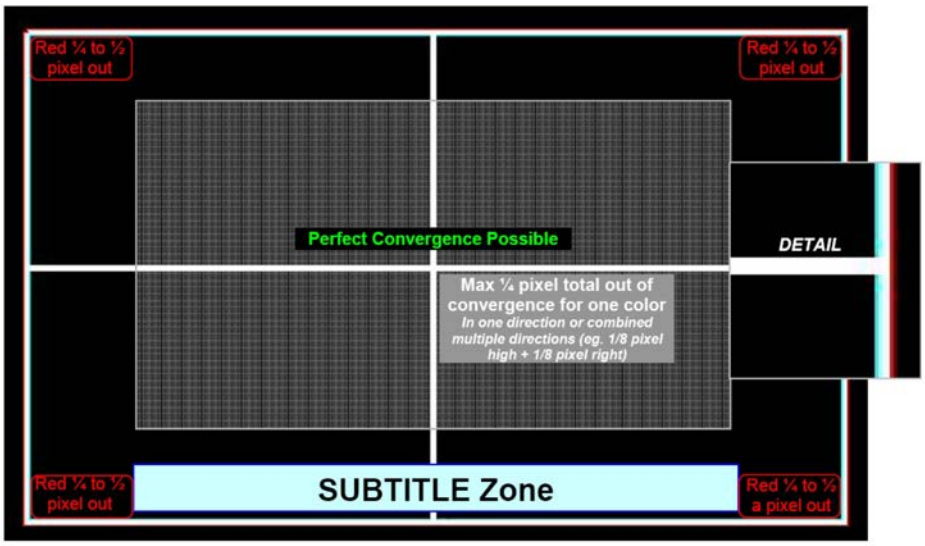

Manually overriding the shutter

Use this procedure to override the shutter when it remains partially open or closed. When time permits, replace the shutter assembly.

1. Turn the light off and allow the projector to cool for 15 minutes.
2. Remove the lens.
3. Reach through the lens opening and move the shutter up and down three times.
4. To determine if the douser is operating, tap the douser open and close icons on the touch panel controller.
5. If the douser is not operating:
   a) Disconnect the projector from AC power.
   b) *Remove the top skin* (on page 33).
   c) *Remove the high security cover* (on page 41).
   d) Disconnect the shutter from the inline connector.
   e) Remove the light dump.
   f) Remove the two screws securing the shutter assembly.
   g) Move the douser to the open or closed position.

h) To reassemble the projector, repeat steps f to a.

6. Replace the lens.

Activating marriage

You must complete marriage to display encrypted content and to comply with Digital Cinema System Specification (the DCI specification).

You cannot complete marriage remotely. In addition, an authorized employee must be physically present to verify that the anti-tamper seal on the card firewall is unbroken, the projector is unaltered, and to tap the marriage button on the card cage faceplate.

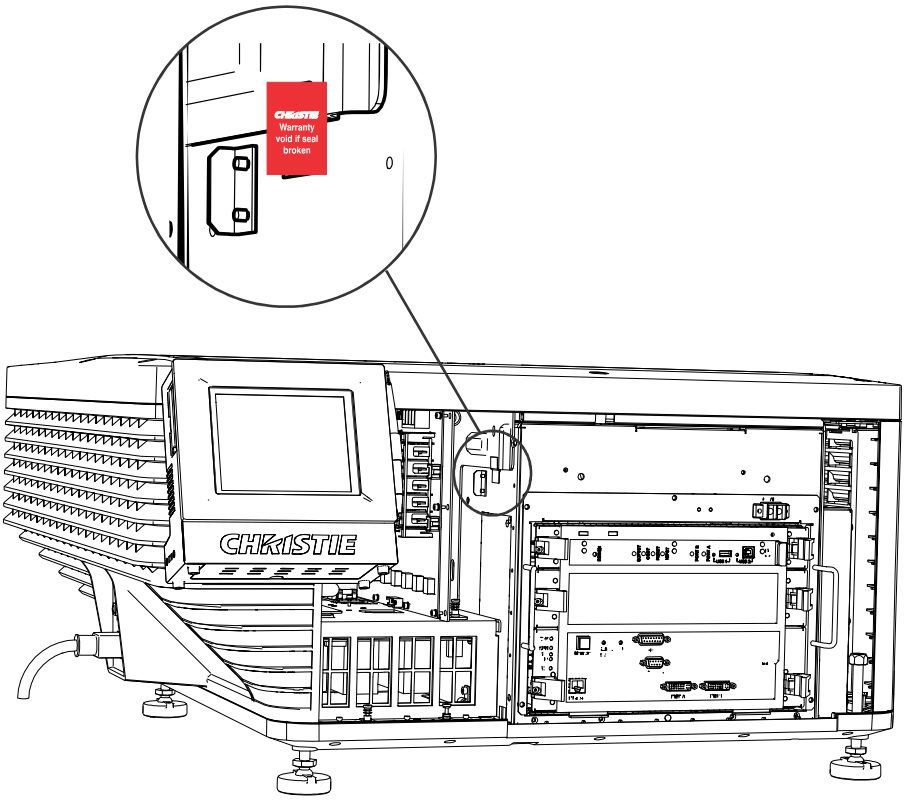

1. On the touch panel controller (TPC), log on to the projector with marriage permissions.
2. Tap **Menu** > **Service Setup** > **IMB Marriage**.
3. Complete the Marriage wizard.
4. Tap **Finish**.
5. Verify that the marriage ring is installed correctly and an anti-tamper alarm does not appear on the TPC.

Projector connections

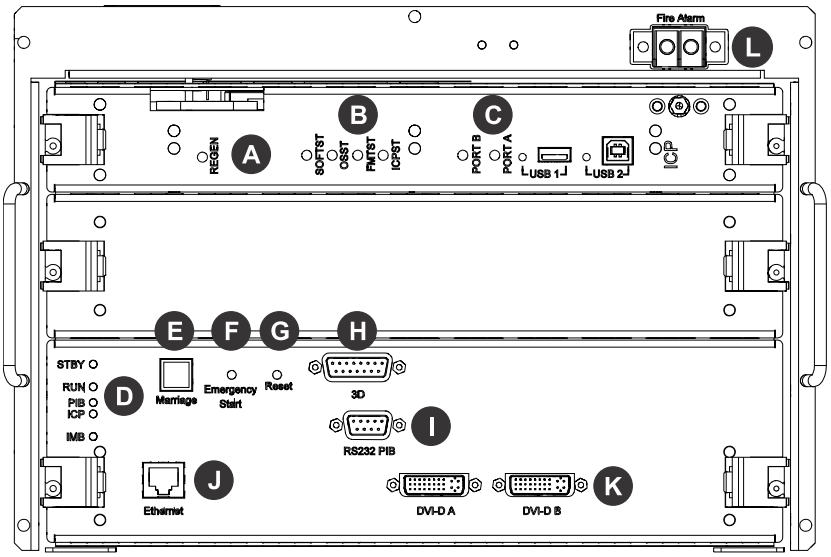

Item	Description
A	Indicates the status of the regulator. A solid blue LED indicates the regulator is enabled. If the LED is not illuminated, the regulator is not enabled.
B	• **SOFTST**—(Software State) Indicates the state of the software application running on the integrated cinema processor (ICP). During normal operation, this LED blinks. During start up, the LED changes from off to blinking. • **OSST**—(Operating System State) Indicates the state of the ICP operating system. During normal operation, the LED is green. During start up, the LED changes from off to green. • **FMTST**—(FMT FPGA State) Indicates the state of the FMT FPGA circuit. During normal operation, the LED is green. When the power is turned on, the LED turns green immediately. • **ICPST**—(ICP FPGA State) Indicates the configured state of the ICP FPGA circuit. During normal operation, the LED is green. When the power is turned on, the LED turns green immediately.
C	• **PORT B**—Indicates the status of the USB port. A green LED indicates the port is active. If the LED is not illuminated, the port is inactive. • **PORT A**— Indicates the status of the USB port. A green LED indicates the port is active. If the LED is not illuminated, the port is inactive.
D	• **STBY**—The LED is green when the standby power supply is active. If the LED is not illuminated, the standby power supply has failed or the projector circuit breaker is off. • **RUN**—The LED flashes green when the projector is operating normally. If the LED is not illuminated or solid green, a communication, software, or hardware error has occurred. If the LED is yellow, the projector cannot communicate with the touch panel controller (TPC). • **PIB**—The LED is green when the projector intelligence board (PIB) is detected and operating correctly. A red LED indicates a communication error. A flashing red LED indicates the PIB is not installed correctly. If the LED is not illuminated, the PIB is inactive.

Item	Description
	• **ICP**—The LED is green when the ICP is operating correctly. A red LED indicates a communication issue. If the LED is not illuminated, the ICP is inactive. • **IMB**—The LED is green when the integrated media block (IMB) is operating correctly. A red LED indicates a communication issue. If the LED is not illuminated, the IMB is inactive.
E	Indicates marriage status. In full power mode, a green LED indicates that the projector is properly married and encrypted content can be displayed. A red LED indicates marriage is broken and encrypted content cannot be displayed.
F	Turns the projector and the lasers on and opens the douser. Press and hold the button to close the douser, turn the lasers off, and keep the power on. We recommend that you use this button only when the TPC is unavailable.
G	Resets the projector electronics. After restarting, the projector returns to its previous power mode. You must turn on the light source manually.
H	Connects the projector to 3D devices.
I	Connects the projector to Christie or third-party automation equipment.
J	Connects the projector to a 10Base-T/100Base-TX Ethernet connection.
K	Connects the projector to high-definition cinema sources. The connectors can be used together to deliver Dual Link HD-SDI following the SMPTE 372M standard.
L	Connects the projector to the building fire alarm so the light source can be shut down in the event of a fire. If you are not using the connection, leave the factory installed jumper cable in place. Wire the fire alarm circuit on the projector to a normally closed, dry contact building fire alarm circuit. When the contacts open, the light source shuts down and cannot be turned back on until the circuit is closed and a light on command is sent to the projector. We recommend using twisted pair wiring, minimum 24 AWG. The circuit should be left floating, do not connect to ground.

Parts and module replacement

When ordering replacement parts, provide the following information found on the product license label:

- Projector Model
- Projector Serial Number
- Manufacture Date

Tools required for service

Before servicing the projector, ensure the following tools are available.

- #1 Phillips™ screwdriver
- #2 Phillips™ screwdriver
- 2.0 mm hex screwdriver
- 2.5 mm hex screwdriver
- 3.0 mm hex screwdriver
- 4.0 mm hex screwdriver
- 5.0 mm hex screwdriver
- 17 mm wrench
- 19 mm wrench
- Side cutters
- Needle nose pliers
- Cable ties
- Rubber standoffs

Index of parts and modules

The following table lists the parts and modules for CP2208-LP.

Description	Part number
Filters	
Light engine intake	003-004654-XX
Card cage	003-004655-XX

Description	Part number
Radiator	003-005855-XX
Fans	
Fan 12V 1.6A 4-wire 150 mm (fans 1, 2)	003-110862-XX
Fan 12V 1.1A 4-Wire 92mm (fans 3, 5 ,6, 7, 8)	003-113173-XX
Fan 12V 0.45A 4-wire 60 mm (fan 9)	003-111709-XX
Fan 12V 0.42A 4-wire 60 mm (heatsink/heatpipe)	003-113189-XX
Fan 12V 1.1A 4-Wire 92mm (radiator)	003-113173-XX
Cooling	
Light module liquid cooling	003-121288-XX
Electronics	
Touch panel controller	003-102075-XX
Touch panel controller storage device memory card 4GB	003-004660-XX
Interlock switch	003-001559-XX
Low voltage power supply	003-120705-XX
Low voltage power supply 60W (standby)	003-120509-XX
AC/DC 200AC/54DC power supply	003-121289-XX
300 W low voltage power supply assembly	003-006043-01
AC input assembly	003-005866-01
Optics	
Fold mirror #1	003-001979-XX
Fold mirror #2	003-001980-XX
Yellow notch filter	003-105951-XX
Light tube	003-106474-XX
Light engine	003-102958-XX
Shutter	003-102988-XX
Light module	003-121287-XX
Light driver module	003-121290-XX
Printed circuit boards and sensors	
Integrated cinema processor	003-101342-XX
Temperature sensor	003-100618-XX
Backplane PCB	003-111666-XX
IMCB2 PCB	003-111426-XX
Light sensor	003-111904-XX

Description	Part number
PIBS1	003-105826-XX
Bridge PCB	003-112854-XX
Fuse PCB	003-113049-XX
Mechanical	
Lens mount	003-103553-XX
Lens mount motor stepper	003-100702-XX
Lens mount locking handle	003-004461-XX
Lens mount plug (qty 5)	003-005710-XX
Touch panel controller mounting hardware	003-005840-XX
Feet (4x adjustable/front feet 120mm and back feet 203mm)	003-002146-XX
High security lock/keys	003-001526-01
Harnesses	
Touch panel controller harness	003-112885-XX
LVDS harnesses (qty 3)	003-111832-XX
Temperature harness	003-005756-XX
DC LVPS O/P harness	003-111852-XX
Bridge board harness kit	003-005859-XX
Bridge to fans harness kit	003-005858-XX
Optical switch harness	003-100701-XX
Accessories	
1.2-1.72 .69” DLPCine Zoom	108-494108-XX
1.33-2.1 .69” DLPCine Zoom	108-495109-XX
1.62-2.7 .69” DLPCine Zoom	108-496100-XX
2.09-3.9 .69” DLPCine Zoom	108-497101-XX
Rack stand	108-416102-XX
Ball joint and arm assembly	159-101103-XX
Integrated media block (IMB)	108-384107-XX

Projector covers and feet

Learn how to remove the covers and feet and touch panel controller (TPC) of the projector.

Removing the top skin

The top skin provides access to the interior of the project.

Estimated replacement time: 4 minutes

1. Loosen the ten captive screws securing the top skin.

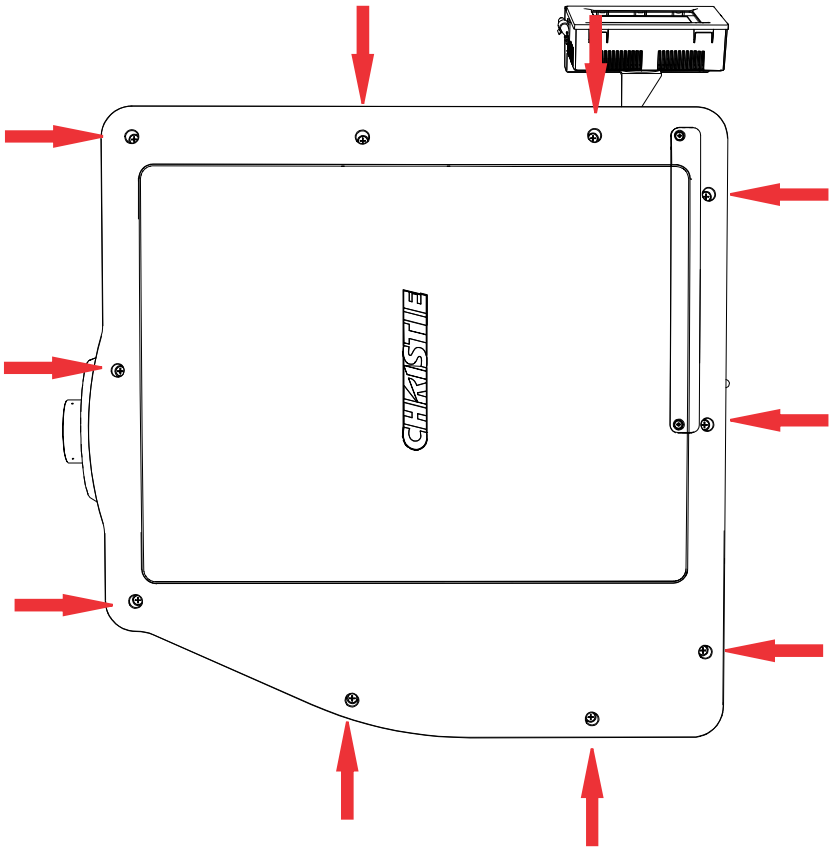

2. Remove the top skin.
3. To install the top skin, repeat these steps in reverse order.

Removing the service door

The service door provides access to the light engine air filter.

Estimated replacement time: 1 minute

1. Remove the two screws from the service door.

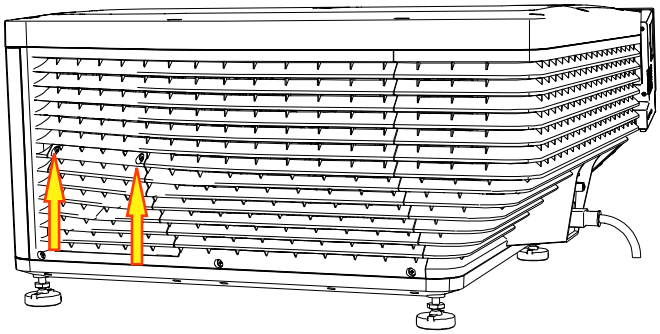

2. Pull the door out from the projector.
3. To re-install, complete these steps in reverse order.

Removing the front skin

The front skin provides access to the lens mount assembly and card cage intake fans.

Estimated replacement time: 8 minutes

1. Turn off the projector and disconnect it from AC power.
2. *Remove the top skin* (on page 33).
3. Loosen the two captive screws on the bottom of the card cage air filter cover.

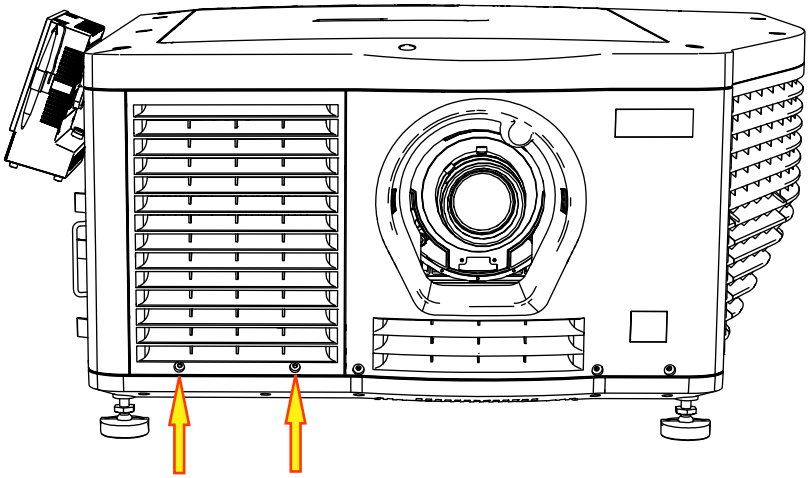

4. Pull the cover out and down.

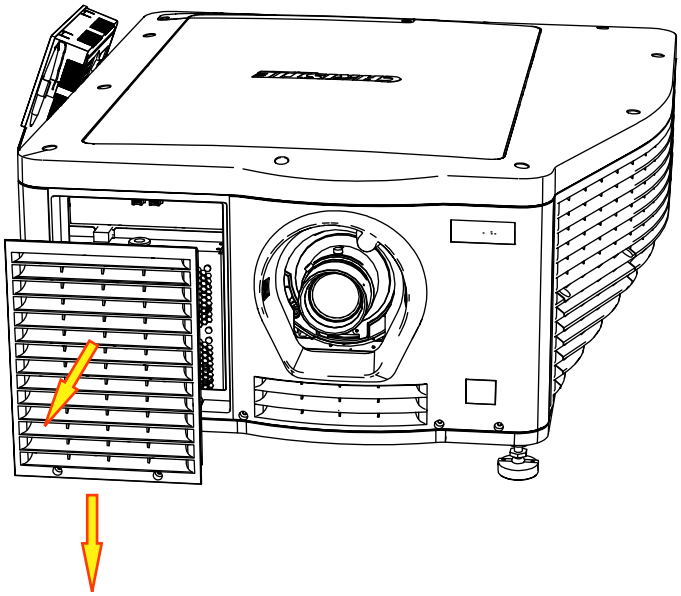

5. Remove the lens surround.
6. Remove the four screws that secure the skin to the projector structure.

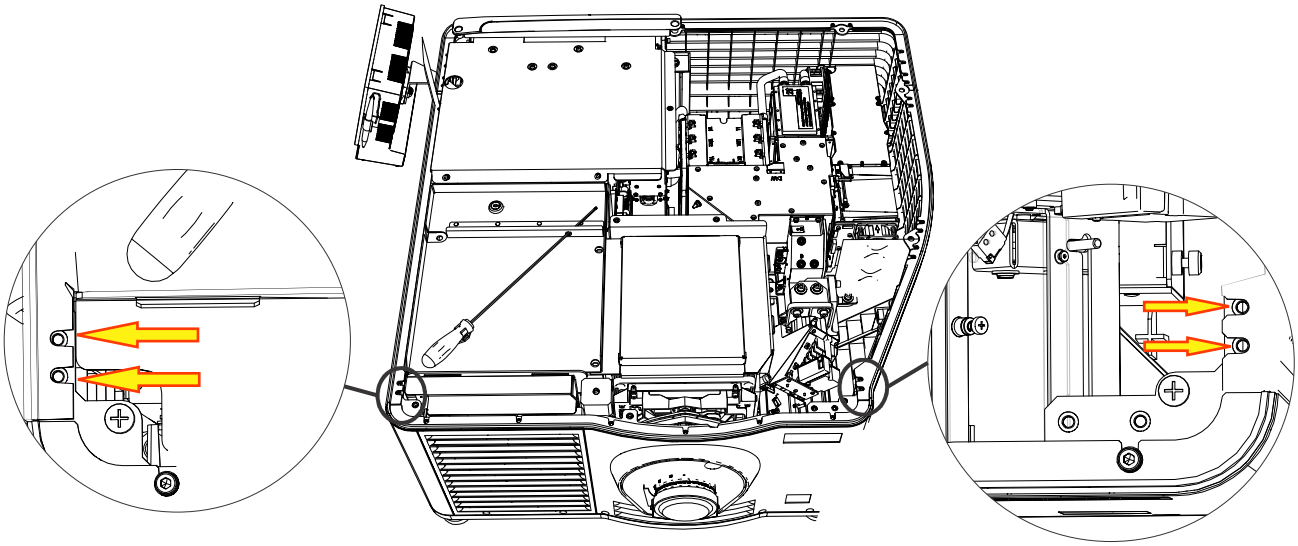

7. Remove the three screws from the front skin and the one screw behind the filter cover.

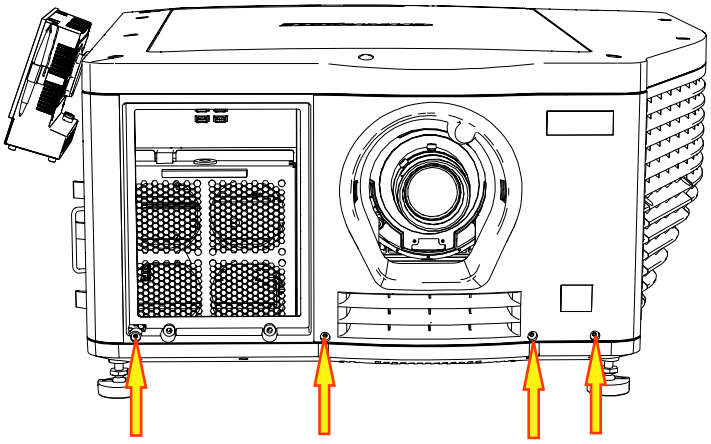

8. Pull the front skin forward to remove it.
9. To replace the front skin, complete these steps in reverse order.

Removing the touch panel controller

The touch panel controller (TPC) is a touch-sensitive screen used to control the projector, manage sources, adjust the display, and view status information.

Estimated replacement time: 1.5 minutes

1. Disconnect the TPC interface cable from the port on the side of the projector.
2. Slide the mounting bracket from the bracket support.

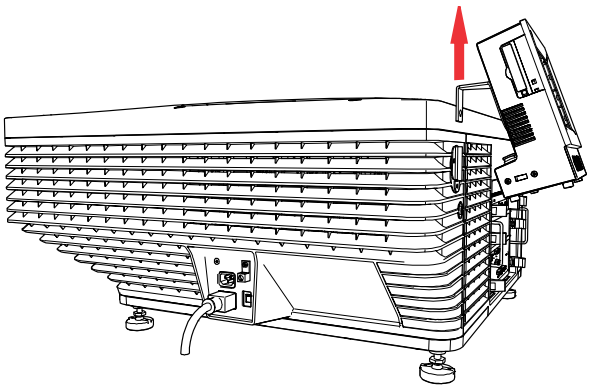

3. Remove the mounting bracket from the TPC.

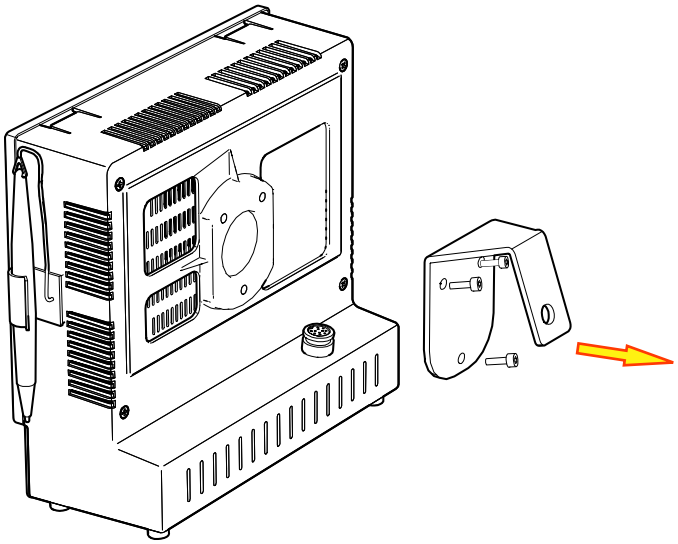

4. To re-install the TPC, complete these steps in reverse order.

Removing the card cage skin

This card cage skin should never need to be removed unless it is damaged and requires replacement.

When looking at the rear of the projector, the card cage skin is located on the right-hand side of the projector.

Estimated replacement time: 9 minutes

1. Turn off the projector and disconnect it from AC power.
2. *Remove the top skin* (on page 33).
3. Remove the two screws above the card cage.

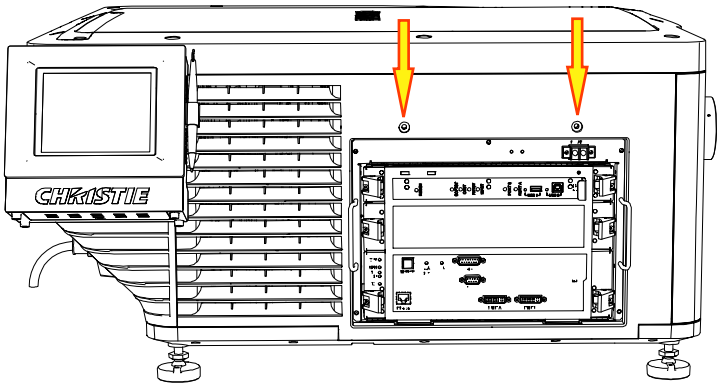

4. *Remove the card cage* (on page 64).
5. Remove the four screws securing the skin to the projector.

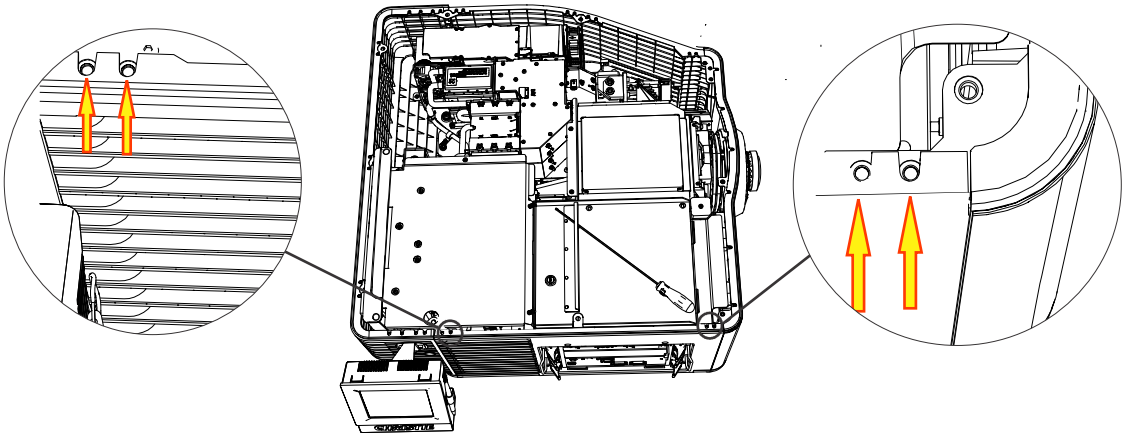

6. Remove the five screws from the bottom edge of the skin.

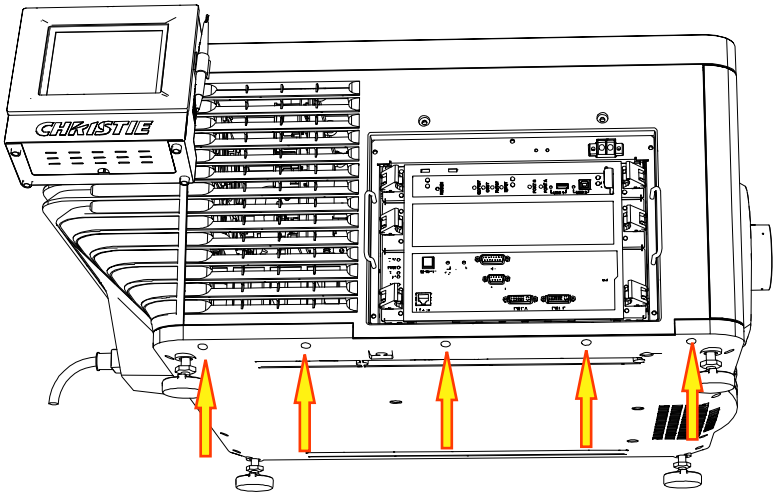

7. Pull the card cage panel out.
8. To re-install, complete these steps in reverse order.

Removing the rear skin

The rear skin provides access to the light module.

Estimated replacement time: 12 minutes

1. Turn off the projector and disconnect it from AC power.
2. *Remove the top skin* (on page 33).
3. *Remove the touch panel controller (TPC)* (on page 36).
4. Remove the four screws securing the skin to the corner brackets.
5. Remove the five screws from the bottom edge of the skin.

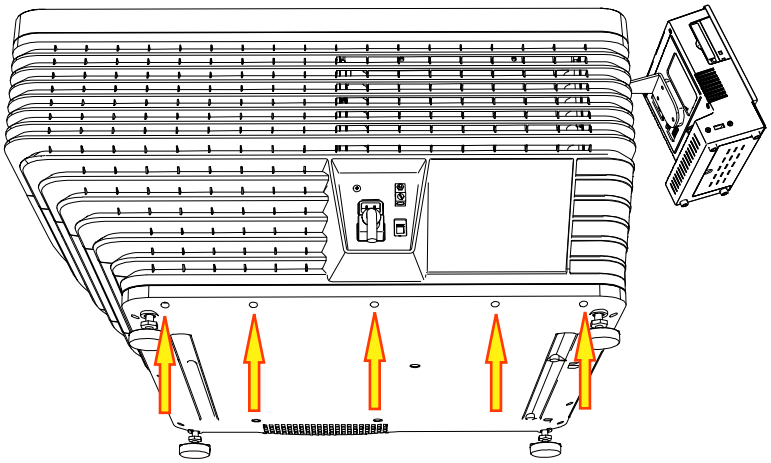

6. Remove the screw from the AC receptacle.
7. Remove the nut and washer securing the ground lug to the projector and then remove the ground lug.
8. Pull on both sides of the rear skin to clear the corner brackets and pull towards you.
9. Remove the two screws securing the TPC harness connector.
10. Remove the rear skin.
11. To re-install, complete these steps in reverse order.

Removing the exhaust panel skin

The exhaust panel skin provides access to optical components. It is located on the left-hand side when you are facing the rear of the projector.

Estimated replacement time: 15 minutes

1. Turn off the projector and then disconnect it from AC power.
2. *Remove the top skin* (on page 33).
3. *Remove the rear skin* (on page 38).
4. Remove the two screws securing the skin to the corner bracket.

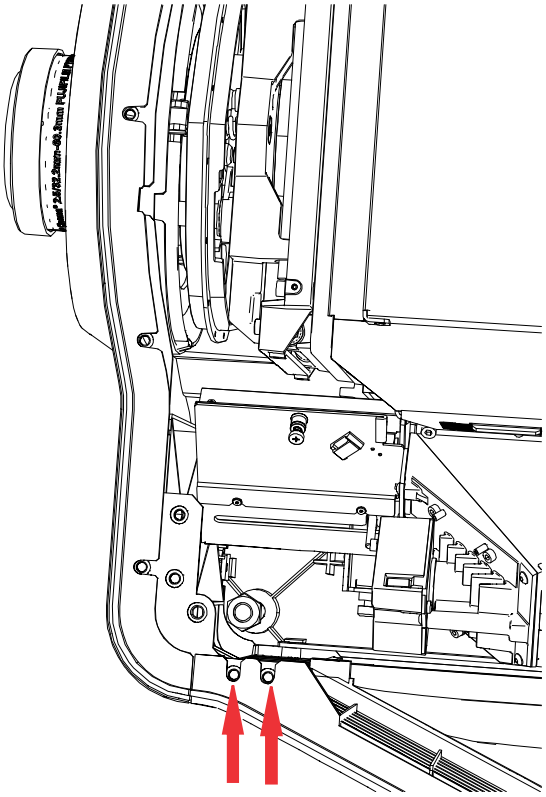

5. Remove the three screws from the exhaust panel skin.

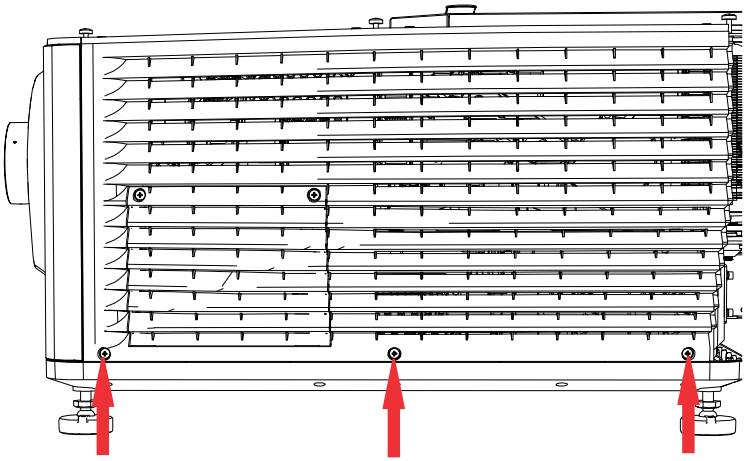

6. Pull the skin forward and out.
7. To re-install, complete these steps in reverse order.

Removing the high security, rear, and light engine covers

The high security, rear, and light engine covers provide access to the light engine assembly and other optical components.

Estimated replacement time: 1 minute

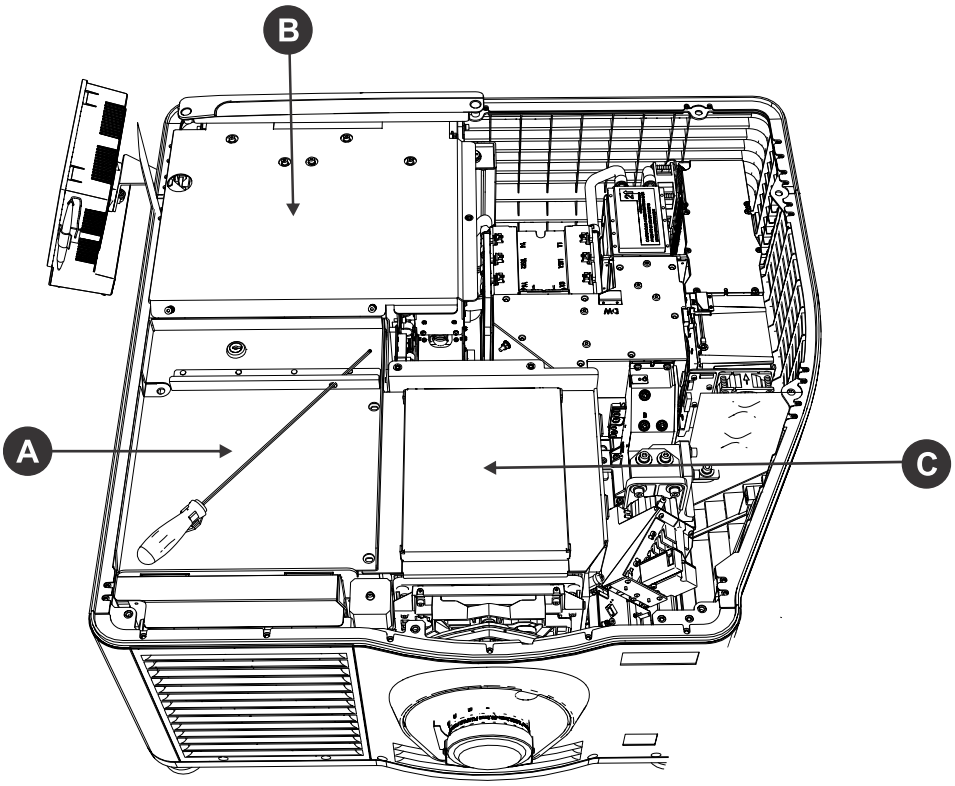

A	High security cover
B	Rear cover
C	Light engine cover

1. Turn off the projector and disconnect it from AC power.
2. *Remove the top skin* (on page 33).
3. Unlock the high security cover with the high security key.
4. Loosen the two M4 captive screws on the rear cover.
5. Tilt the rear cover and slide it out.
6. Lift the high security cover up and out.
7. Remove the two screws connecting the light engine cover to the center structure.
8. Lift the light engine cover up and out.
9. To re-install the covers, complete these steps in reverse order.

Replacing a projector's foot

The adjustable feet can be raised or lowered when positioning the projector to make sure it is level on all sides so the displayed image appears rectangular without any keystone.

Estimated replacement time: 9 minutes for the front feet and 15 minutes for the rear feet.

1. Turn off the light and cool the projector for at least 15 minutes.
2. When the cooling fans stop, turn the projector off and disconnect it from AC power.
3. Prop up the appropriate end of the projector, or shift the projector off of the table or pedestal to create enough clearance.

   To remove the front feet, 15 cm (6 in.) of clearance is required. To remove the rear feet, 23 cm (9 in.) of clearance is required.
4. To remove the rear feet, *remove the rear skin* (on page 38) or to remove the front feet, *remove the front skin* (on page 34).
5. Hold the foot with a ratchet (A) and turn the top locking nut (B) to remove it.

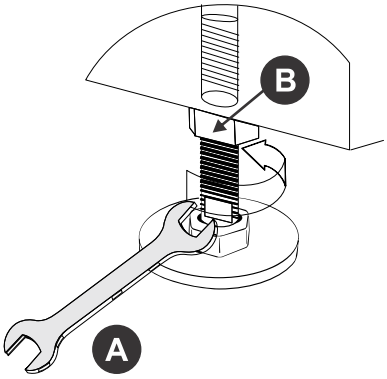

6. Remove the foot.
7. To install the new foot, repeat these steps in the reverse order.

Filtration

Filters help to reduce the effects created by dust, smoke, fog, and other foreign materials from entering the projector.

Notice. If not avoided, the following could result in property damage.

- Do not operate the product without the filter installed.
- Do not reuse an old air filter.

Inspecting the card cage filter

Check the condition of the card cage air filter monthly. Clean or replace the card cage air filter sooner if you are operating the projector in a dusty or dirty environment.

The filter is located on the left side of the projector behind the air filter cover. Use only high efficiency Christie approved filters.

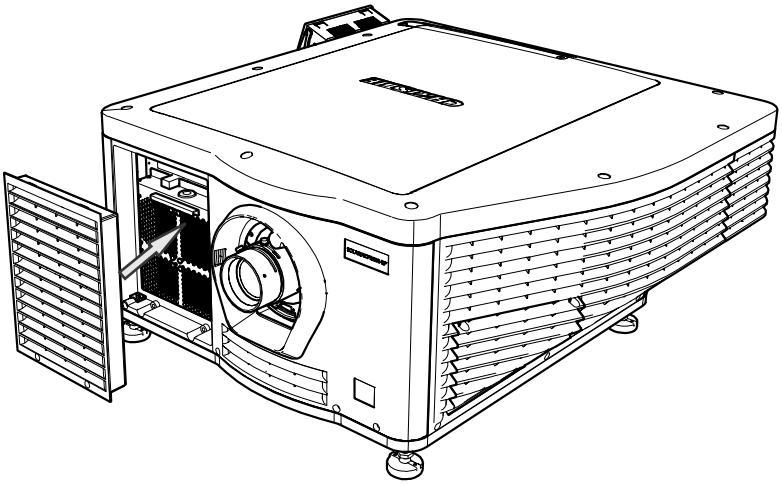

1. Loosen the two captive screws on the bottom of the filter cover.

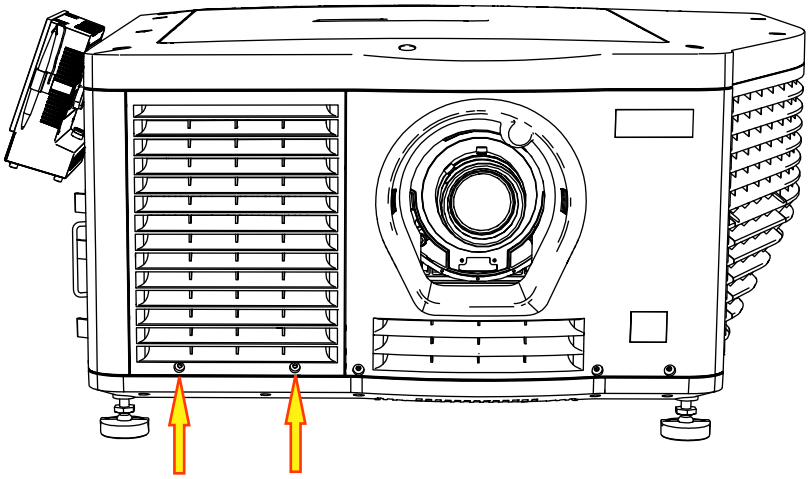

2. Pull the cover out and down.

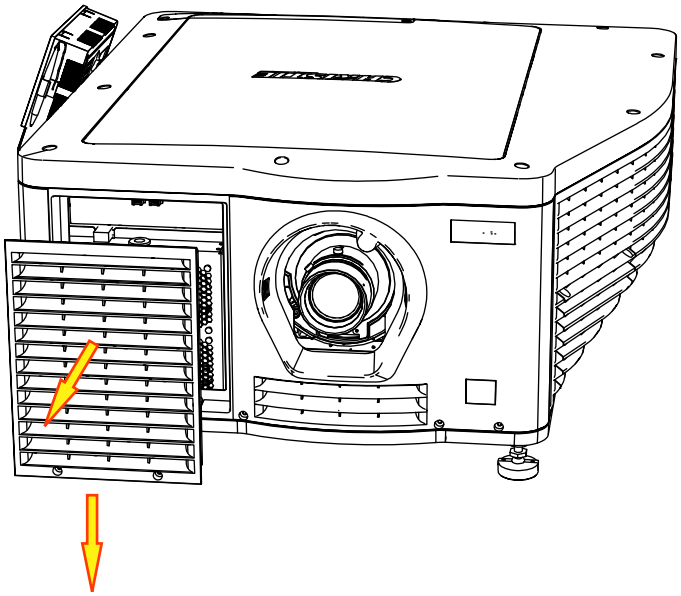

3. Slide the air filter out and inspect it.
   If the filter appears dirty and you cannot see through it, *clean it* (on page 46).
   If the filter appears clean, continue to step 4.
4. Replace the air filter with the airflow indicator facing toward the projector.
5. Install the air filter cover by inserting the two bottom tabs and then pushing the cover closed.
6. Tighten the two captive screws.

Inspecting the light engine compartment filter

The filter is located on the right side of the projector behind the service access panel.

1. Loosen the two captive screws on the service access door and remove it.

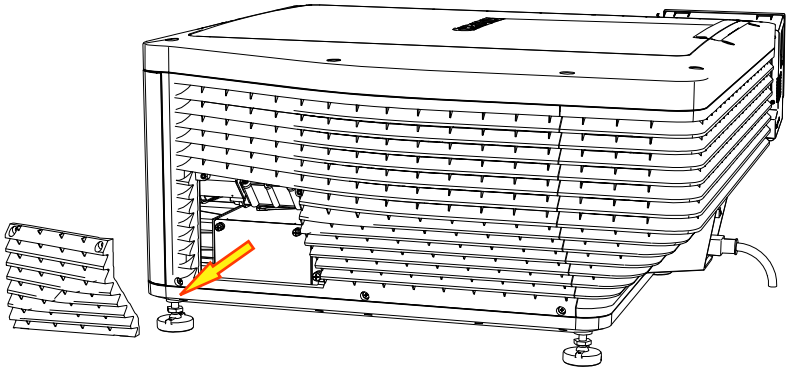

2. Loosen the two captive screws on the cap plate and remove it.

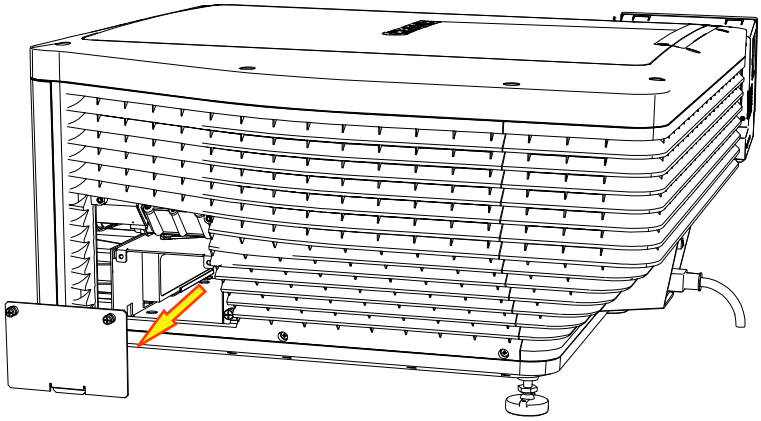

3. Slide the air filter out and inspect it.
   - If the filter appears dirty and you cannot see through it, *clean it* (on page 46).
   - If the filter appears clean, continue to step 4.
4. Replace the air filter with the airflow indicator facing toward the projector.
5. Install the cap plate and tighten the two captive screws.
6. Install the service access door and tighten the two captive screws.

Inspecting the rear radiator filter

The rear radiator filter is located at the rear of the projector, next to the radiator assembly.

1. Loosen the two screws on the filter cover and remove it.

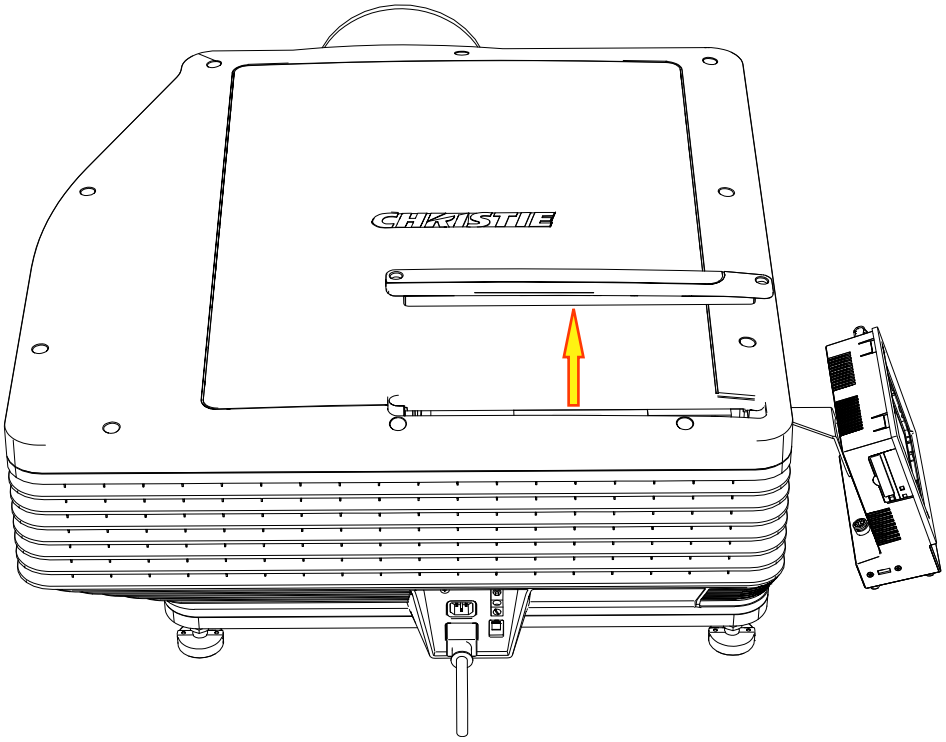

2. Slide the air filter up and out of the projector and inspect it.
   - If the filter appears dirty and you cannot see through it, *clean it* (on page 46).
   - If the filter appears clean, continue to step 3.
3. Replace the air filter with the airflow indicator facing toward the projector.
4. Install the filter cover and tighten the two screws.

Cleaning a washable filter

If the amount of dirt on the filter is minimal, use a vacuum or compressed air to remove it. If you use compressed air, the air must move through the filter in the opposite direction of the air flow indicator on the side of the filter.

Caution! If not avoided, the following could result in minor or moderate injury.

- Install dry filters only. Wet or damp filters can cause an electrical short and damage the product.

1. Hold the filter on an angle under warm running water so the water flows through the filter in the opposite direction of the air flow indicator on the side of the filter.
2. Rinse the filter thoroughly.
3. Submerge the filter for a minimum of 30 minutes in a container of warm water and two tablespoons of mild detergent or liquid dish soap.

   If the filter is extremely dirty, move the filter from side-to-side occasionally or remove the excess dirt by brushing both sides of the filter with a soft brush.
4. Rinse the filter thoroughly by holding it on an angle under cool running water.

   The air flow arrow on the side of the filter should face down.

5. If the filter still appears dirty, repeat steps 3 and 4.
6. Shake the filter over a container until most of the water is removed.
7. Place the filter on its edge on a flat, stable surface and allow it to dry thoroughly.
8. To confirm that the filter is dry, place it over a dry paper towel and shake it.
   If the paper towel remains dry, the filter can be installed in the projector.
9. Record the date the filter was cleaned.
10. Replace the filter following the instructions for the specific filter.

Ventilation and cooling

Vents and louvers provide ventilation, both for intake and exhaust, keeping the projector components within their operating temperature specifications.

Do not install the projector near a radiator, heat register, or within an enclosure. To ensure adequate airflow, keep a minimum clearance of 50 cm (20 inches) around the projector and never block or cover the vents.

When replacing fans, ensure you confirm the fan direction for airflow. The correct orientation of the fan also ensures that the fan harness reaches the connector.

We recommend that you periodically check that the low voltage power supply fan is operating. It is not monitored and a failure can cause damage to the projector.

Replacing the power factor correction and power supply fans (fans 1 and 2)

Fans 1 and 2 provide air cooling for the power factor correction (PFC) unit and the power supply (PS) unit.

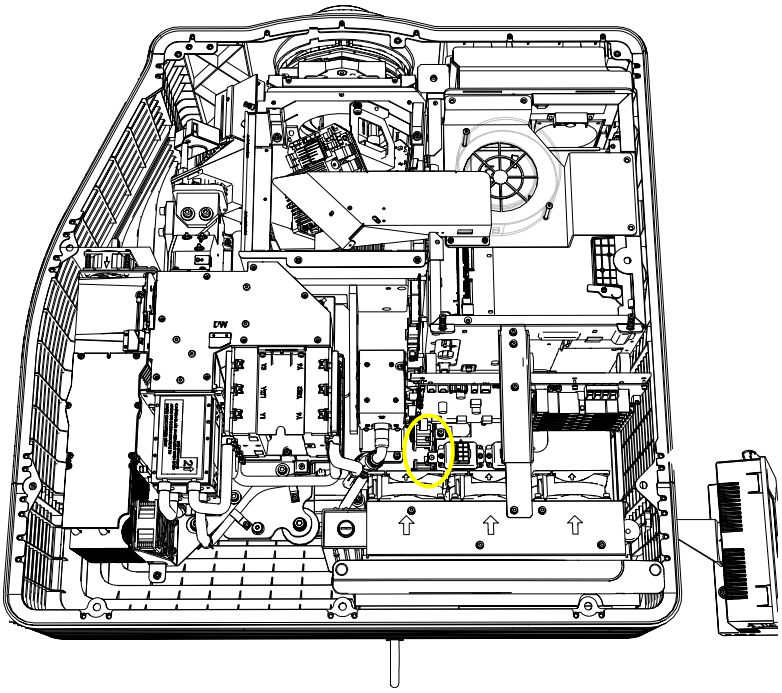

Estimated time to replace: 52 minutes per fan

1. *Remove the liquid cooling module* (on page 56).

2. Disconnect the harness from fuse board A and B.
3. Remove the two captive screws securing the fan bracket.
4. Pull the fan bracket out of the projector.
5. Disconnect the inline connector for each fan.
6. Remove the defective fan and fan guard from the mounting plate, pulling them off the rubber standoffs.
7. To replace the fan, complete these steps in the following order.

Replacing the light engine intake fan (fan 3)

The light engine intake fan draws filtered air through the front air filter.

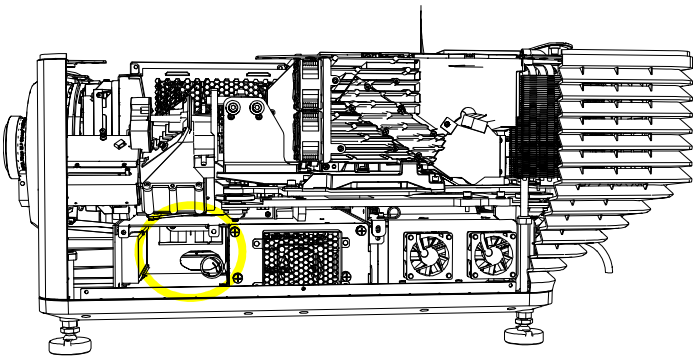

Estimated replacement time: 30 minutes

1. *Remove the service door* (on page 34).
2. Remove two captive screws that secure the metal fan cover.
3. *Remove the top skin* (on page 33).
4. *Remove the high security and light engine covers* (on page 41).
5. Remove the light engine blower.
6. Remove the five screws securing the card cage.
7. Loosen the two screws and remove the fire interlock tab.
8. Pull up the plunger and slide the card cage about 76 mm (3 in.) along the guides using the handles.

   Ensure the internal harnesses from the electronics do not get snagged or pinched against the sides of the card cage assembly as it is being pulled out, as this can cause damage to the wiring.

9. Disconnect the inline connector.
10. Remove the two captive screws securing the fan to the center structure.
11. Push the fan away from the locking screws until it unlocks and drops down.
12. To replace the fan, place it over the locking screws and pull towards you until it locks.

Locking screw position: unlocked

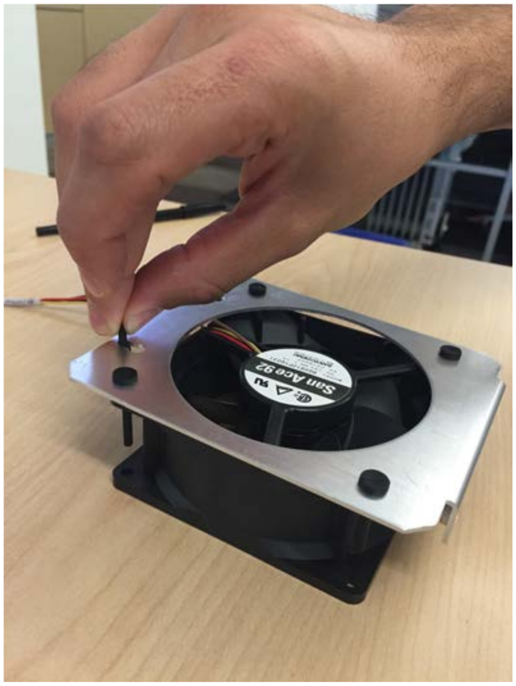

Locking screw position: Locked

13. Complete the remaining steps in reverse order.

Replacing the light engine blower fan (fan 4)

The light engine blower fan receives filtered air from the front air filter and an intake duct.

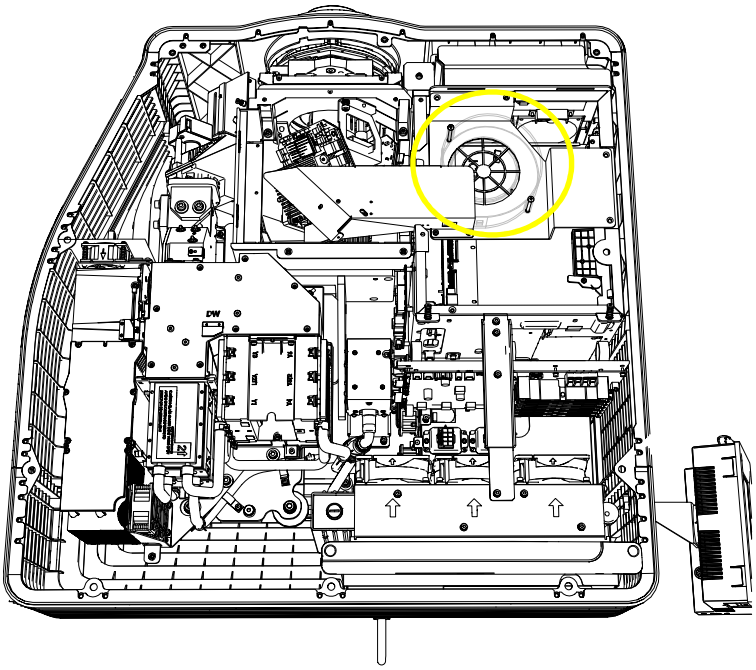

Estimated replacement time: 7 minutes

1. *Remove the top skin* (on page 33).
2. *Remove the high security and light engine covers* (on page 41).
3. Remove the four screws securing the top blower assembly.
4. Disconnect the fan harness connection.
5. Remove the three screws securing the light engine air duct.
6. Remove the two screws securing the fan.
7. Remove the fan.
8. To replace the fan, complete these steps in reverse order.

Replacing the card cage fan pack (fans 5, 6, 7, and 8)

The fan pack is located directly behind the card cage air filter on the front of the projector and consist of four fans.

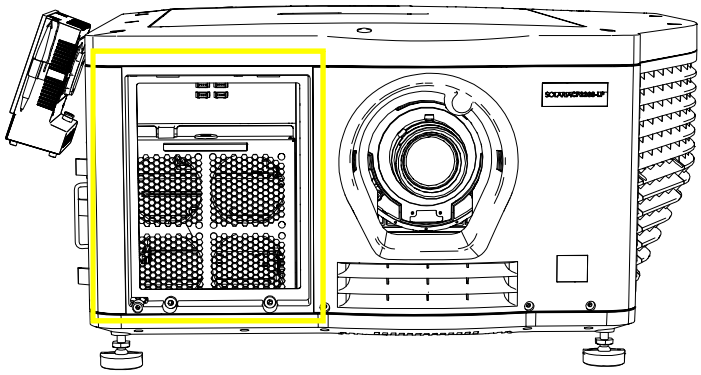

Estimated replacement time: 16 minutes per fan

1. *Remove the top skin* (on page 33).
2. Loosen the two captive screws on the bottom of the card cage air filter cover.
3. Pull the cover out and down.
4. *Remove the front skin* (on page 34).
5. Remove the side baffle assembly
6. *Remove the high security cover* (on page 41).
7. Disconnect the inline connector for each fan.
8. Pull the release lever on the inside of the fan pack.
9. Pull the fan pack vertically, then angle the fan pack towards you to remove it.
10. Remove each fan requiring repair, threading the fan harness through the rubber grommet.
11. Insert the new fan into the fan pack (in the proper airflow direction).
12. Lock the fan into place using pliers to pull the rubber standoffs through corner holes and reroute the harness.
13. To re-install the fan pack, complete these steps in reverse order.

Replacing the low voltage power supply fan (fan 9)

Fan 9 provides air cooling to the low voltage power supply (LVPS) system.

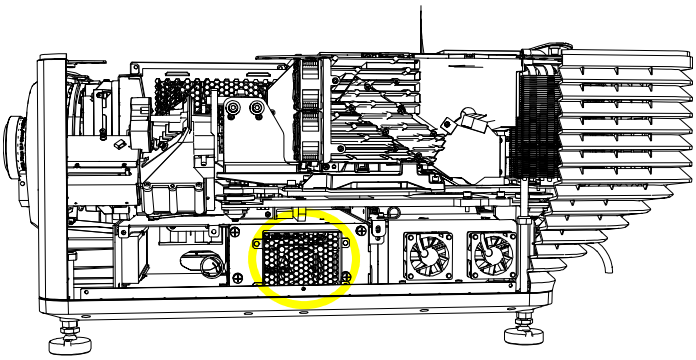

Estimated replacement time: 22 minutes

1. *Remove the exhaust skin* (on page 39).
2. Loosen the four screws securing the LVPS cover.
3. Lift the protective cover and disconnect the LVPS fan harness connections from the inline connector.
4. Remove the fan and fan guards from the mounting plate, off of the rubber standoffs.
5. To replace the fan, complete these steps in reverse order.

Replacing the radiator fans

The radiator fans (RAD TOP-R, RAD BOT-R, RAD TOP-M, RAD BOT-M, RAD TOP-L, and RAD BOT L) provide cooling for the light module and radiator.

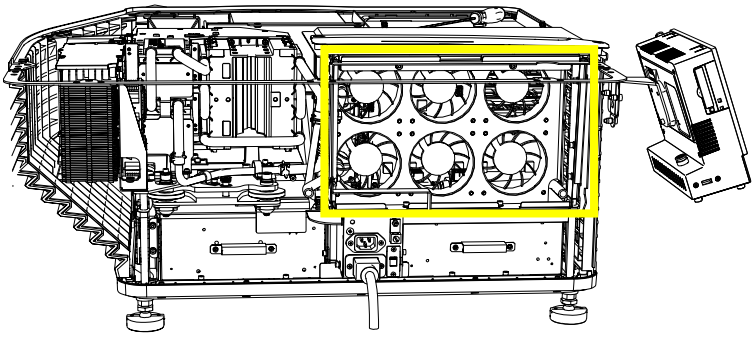

Estimated replacement time: 27 minutes per fan

1. *Remove the top skin* (on page 33).
2. *Remove the rear skin* (on page 38).
3. Remove the two screws securing the radiator cover.
4. Remove the four screws securing the radiator support bracket
5. Remove the radiator fan support bracket:

a) Remove the four screws on the top of the bracket.
b) Remove the rear radiator filter.
c) Remove the two screws on the front of the bracket.
d) Remove the two screws on the bottom of the bracket.
e) Raise the bracket off the alignment pins
f) Release the coolant hose from the radiator fan support bracket.
You may need to loosen the nut securing the coolant hose in place.
Disconnect the coolant hose using the quick disconnect.
g) Remove the radiator fan support bracket with fan assemblies from the projector.

6. Remove the defective fan from the mounting plate (pull off through rubber standoffs).
7. Release the defective fan from the inline connector and remove it.
8. To replace the fan, complete these steps in reverse order.

Replacing the Replacing the PW heat pipe fans (H-PIPE TOP and H-PIPE BOT)

The PW heat pipe fans are located behind the rear skin and provide cooling for the light module.

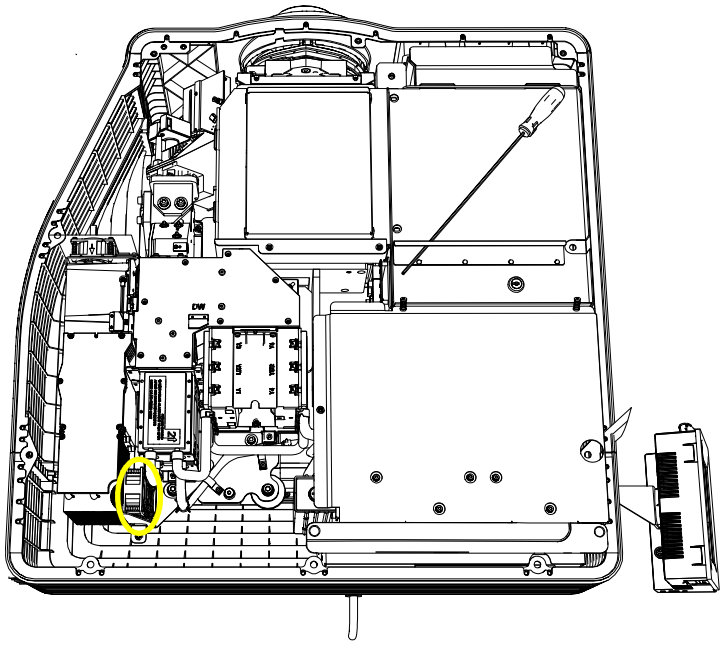

Estimated replacement time: 19 minutes

1. *Remove the top skin* (on page 33).
2. *Remove the rear skin* (on page 38).
3. Remove the two screws securing the fan bracket.
4. Disconnect the inline connectors for both fans.
5. Remove the defective fan and guard from the mounting plate.

6. To install the new fan, complete these steps in reverse order.

Replacing the PH heat sink fans (PH HSINK TOP and PH HSINK BOT)

The PH heat sink fans are located behind the exhaust skin and cool the light module.

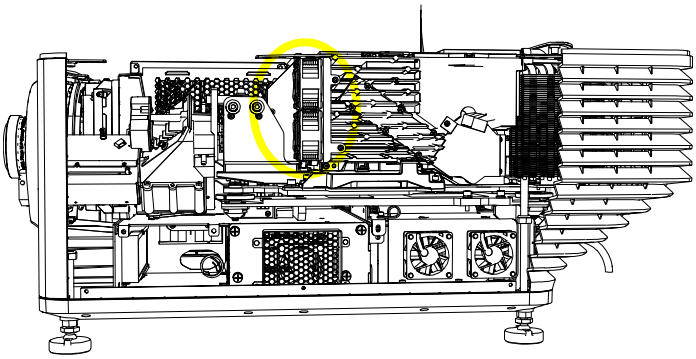

Estimated time to replace: 21 minutes

1. *Remove the exhaust panel skin* (on page 39).
2. Disconnect the inline connector of the defective fan.
3. Remove the fan and fan guard from the mounting plate.
4. To replace the fan, complete these steps in reverse order.

Replacing the PSU fans (PSU EX R and PSU EX L)

The PSU fans are located behind the exhaust skin and cool the light module power supplies.

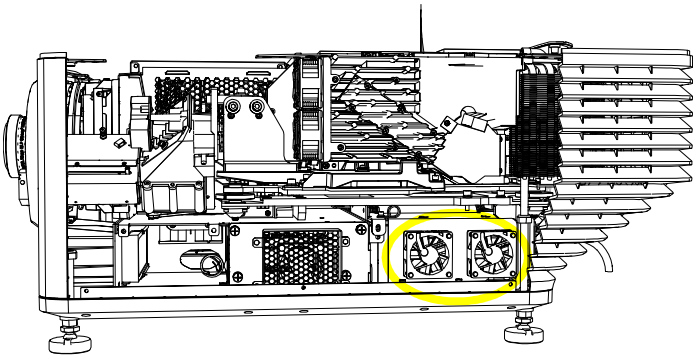

Estimated replacement time: 22 minutes.

1. *Remove the exhaust panel skin* (on page 39).

2. Remove the two screws securing the fan bracket.
3. Disconnect the inline connector of the defective fan.
4. Remove the defective fan and fan guard from the mounting plate.
5. To replace the fan, complete these steps in reverse order.

Replacing the liquid cooling module

The liquid cooling module is used to cool the light module. It consists of a radiator and a pump.

Estimated replacement time: 45 minutes.

1. *Remove all of the radiator fans* (on page 53).
2. Cut the cable ties securing the wires to the pump.
3. Disconnect the pump wires from the laser driver board.
4. Remove the screw securing the ambient remote temperature sensor module.
5. Remove the two screws securing the radiator exhaust bracket.
6. Remove the screw from the p-clip securing the radiator tubing.
7. Disconnect the quick disconnect on the hose between the radiator and pump.
8. Remove the four screws securing the radiator.
9. Remove the four screws securing the pump.
10. Remove the liquid cooling module.
11. To replace the liquid cooling module, complete these steps in reverse order.

Electronics

Learn how to replace the boards, cards, and other electronic components in the projector.

Replacing the projector intelligence board

The projector intelligence board (PIBS1) is located inside the card cage.

Estimated replacement time: 10 minutes

1. *Remove the top skin* (on page 33).
2. *Remove the high security cover* (on page 41).
3. Reach into the projector and pull the lever to release the marriage/security ring.

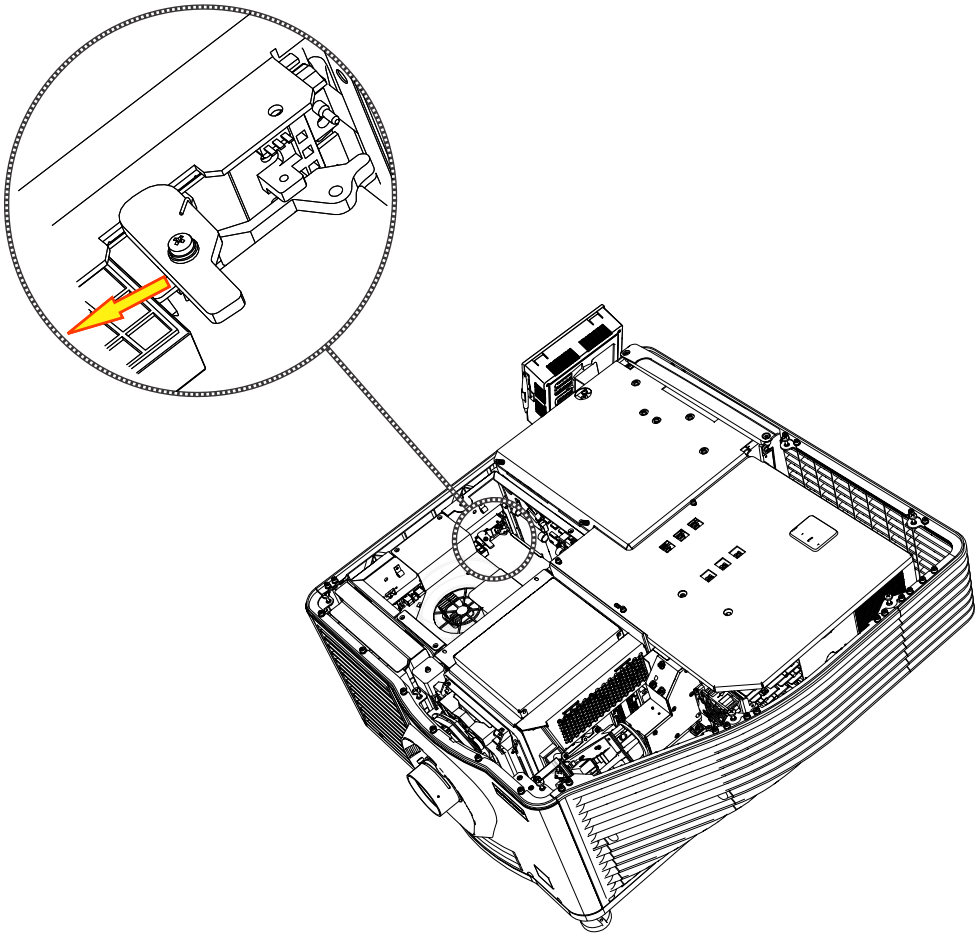

4. Pull the ejectors on the projector intelligence board outward.

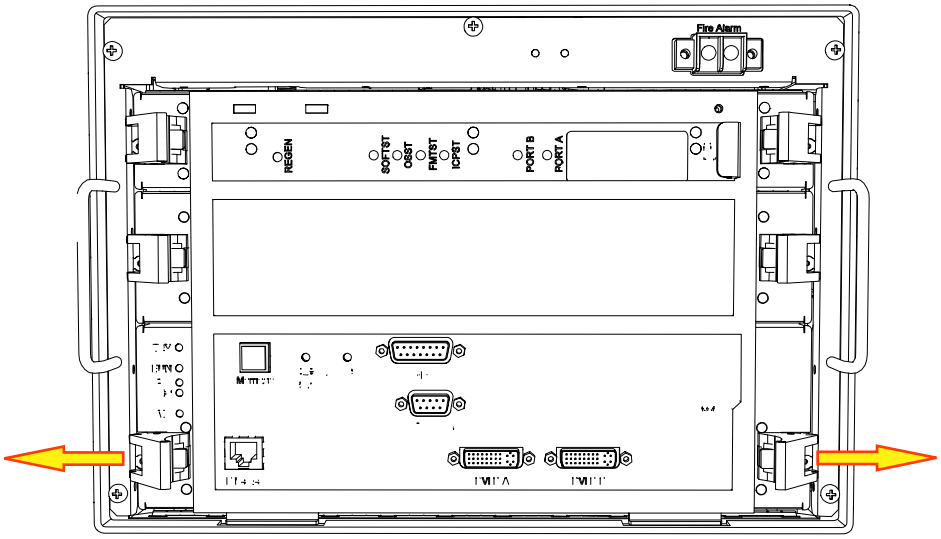

5. Pull the projector intelligence board outward out of the card cage.
6. To replace the projector intelligence board, complete these steps in reverse order.

   After replacing the board, *activate marriage* (on page 27) so you can continue to play encrypted content.

Replacing the integrated media block

The integrated media block board (IMB) is located in the card cage.

Estimated replacement time: 10 minutes.

1. *Remove the top skin* (on page 33).
2. *Remove the high security cover* (on page 41).
3. Reach into the projector and pull the lever to release the marriage/security ring.

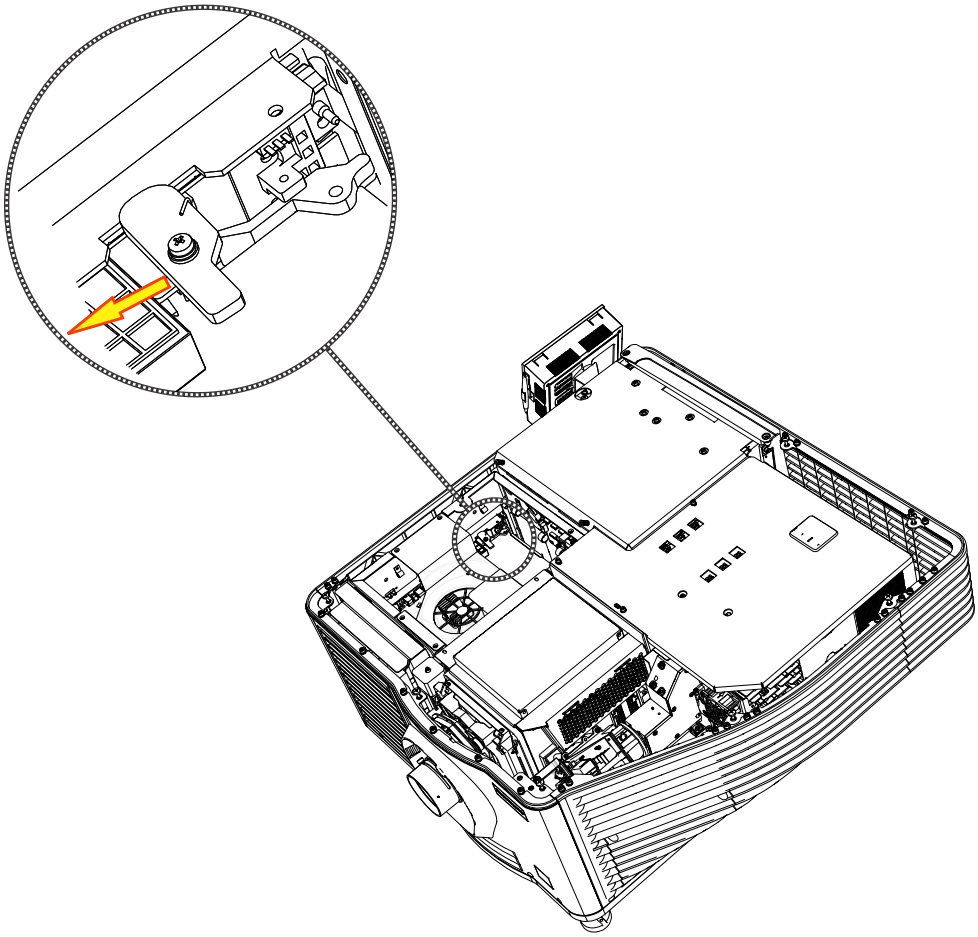

4. Pull the ejectors on the IMB outward.
5. Pull the IMB outward out of the card cage.
6. To replace the IMB, complete these steps in reverse order.
   After replacing the board, *activate marriage* (on page 27) so you can continue to play encrypted content.

Replacing the integrated cinema processor

The integrated cinema processor (ICP) is located in the card cage.

Estimated replacement time: 10 minutes

1. *Remove the top skin* (on page 33).
2. *Remove the high security cover* (on page 41).
3. Reach into the projector and pull the lever to release the marriage/security ring.

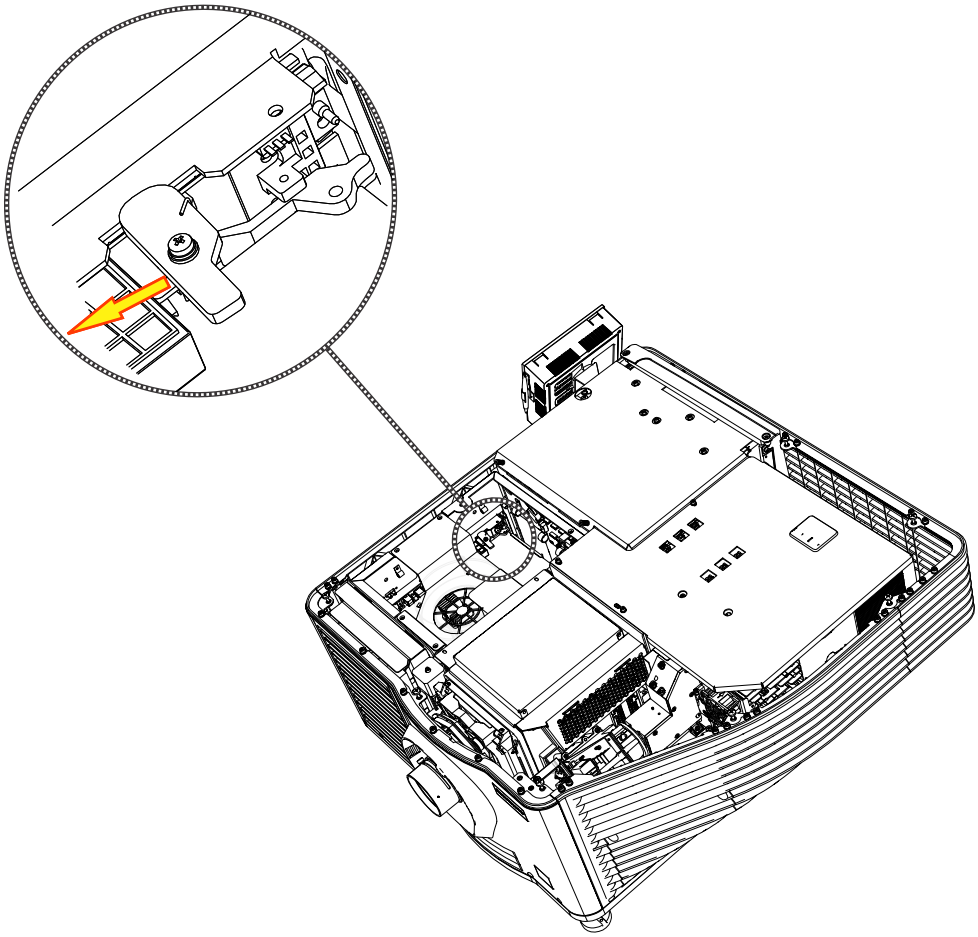

4. Pull the ejectors on the projector intelligence board outward.

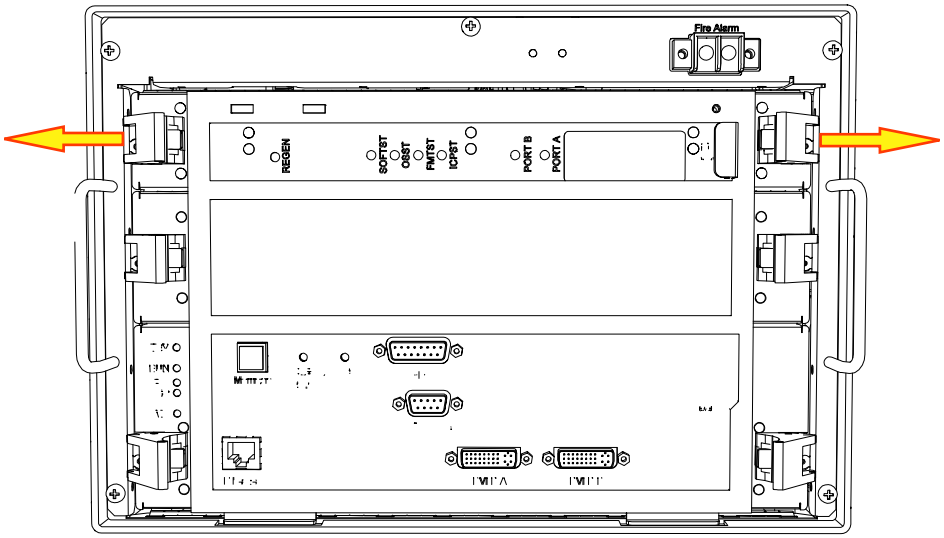

5. Pull the ICP board outward out of the card cage.
6. To replace the ICP board, complete these steps in reverse order.

After replacing the board, *activate marriage* (on page 27) so you can continue to play encrypted content.

Replacing the backplane

The backplane is located at the back of the card cage. The projector intelligence board (PIB), integrated media block (IMB) and integrated cinema processor (ICP) board are connected directly to the backplane.

Estimated time to replace: 35 minutes

1. Turn the lamp off and cool the projector for at least 15 minutes.
2. Turn the projector off and disconnect it from AC power.
3. *Remove the card cage* (on page 64).
4. *Remove the ICP* (on page 59).
5. *Remove the PIB* (on page 57).
6. *Remove the IMB* (on page 58).
7. Disconnect the P12 connector to the backplane.
8. Remove the four screws securing the copper grounding plate.
9. Remove the 18 screws securing the backplane.
10. Tilting the backplane, slide it out the front of the card cage.
11. To install the backplane, complete these steps in reverse order.

    After replacing the backplane, *activate marriage* (on page 27) so you can continue to play encrypted content.

Replacing the remote temperature sensor modules

Remote temperature sensors are located throughout the projector, but the ones service by Christie (that are not included in the light module) are red, green, blue, prism and ambient intake.

1. Locate the remote temperature sensor module (red, green, blue and prism are located on the light engine and the ambient intake is located at the radiator intake).
2. Complete the necessary service processes to access the remote temperature sensor module.
3. Disconnect the harness connection to the remote temperature sensor module.
4. Remove the screw securing the remote temperature sensor module.
5. Remove the remote temperature sensor module PC board.
6. To replace the remote temperature sensor module, complete these steps in reverse order.

Replacing the light sensor module

The light sensor module, mounted to the side of the illumination optic system (IOS), is positioned to sample the light coming through the fold mirror.

Estimated replacement time: 17 minutes

1. Turn off the lamp and cool the projector for at least 15 minutes.
2. Turn off the projector and disconnect it from AC power.
3. *Remove the top skin* (on page 33).
4. *Remove the front skin* (on page 34).
5. Disconnect the harness from the light sensor module.
6. Remove the two screws securing the sensor to the IOS.

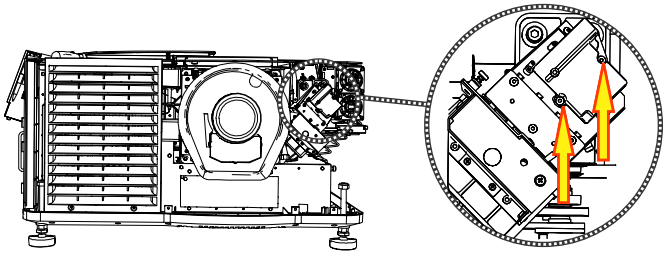

7. To replace the light sensor module, complete these steps in reverse order.

   When reinstalling the light sensor module, recalibrate the footLambert (fL) readings for minimum and maximum power.

Replacing the bridge board

The bridge board provides the ability for the projector electronics to communicate with and control the light module.

Estimated time to replace: 12 minutes.

1. *Remove the top skin* (on page 33).
2. Remove the two screws securing the radiator cover and remove the cover.
3. Disconnect the two top connections on the bridge board (J1212 and J122).
4. Loosen the captive screw securing the bridge board.
5. Slide the board to release it from the locking pins.
6. Slowly move the board up and out, disconnecting the four harness connections (J120, J124, J125, and J127) as they become accessible.
7. To replace the bridge board, complete these steps in reverse order.

Replacing the fuse boards

Fuse boards A and B are located on the bottom plate by the laser drive board.

Estimated replacement time: 11 minutes per board.

1. *Remove the top skin* (on page 33).

2. Release the two screws securing the radiator cover and remove the cover.
3. Disconnect the appropriate fuse board connector.
4. Remove the two screws securing the fuse board.
5. Remove the fuse board from the projector.
6. To replace the fuse board, complete these steps in reverse order.

Replacing the marriage interlock switch

The marriage interlock switch is located in the card cage assembly.

Estimated replacement time: 10 minutes.

1. Turn off the light and cool the projector for at least 15 minutes.
2. Turn off the projector and disconnect it from AC power.
3. *Remove the top skin* (on page 33).
4. *Remove the high security and light engine covers* (on page 41).
5. Release the marriage security ring.
6. *Remove the integrated cinema processor (ICP)* (on page 59).
7. *Remove the integrated media block (IMB)* (on page 58).
8. Disconnect the marriage interlock switch (P12) connector from the backplane.
9. Remove the marriage interlock switch (P12) from its clips.
10. Loosen and remove the two screws securing the marriage interlock switch.
11. Remove the marriage interlock switch from the housing.
12. To replace the marriage interlock switch, complete these steps in reverse order.

Replacing the laser driver board

The laser driver board is located adjacent to the radiator fan assemblies.

Estimated replacement time: 60 minutes.

1. *Remove the radiator fans* (on page 53).
2. Disconnect the 15 connections to the board.
3. Remove the four screws from terminal lugs.
4. Release all harnesses from cables clamps.
5. Remove the three screws securing laser driver board bracket.
6. Remove the 10 screws securing laser driver board.
7. Remove the laser driver board.
8. To replace the laser driver board, complete these steps in reverse order.

Replacing the integrated motor control board

The integrated motor control board (IMCB) is installed in the card cage and controls the lens.

1. Turn off the light and cool the projector for at least 15 minutes.
2. Turn off the projector and disconnect it from AC power.
3. *Remove the top skin* (on page 33).
4. *Remove the high security cover.* (on page 41)
5. Disconnect the 10 IMCB harnesses.
6. Loosen the captive screw.
7. Slide the IMCB toward the operator side of the projector to disengage the locking pins.
8. Lift the IMCB through the top of the projector.
9. To install the new IMCB, complete these steps in reverse order.

Replacing the card cage

The card cage contains the projector intelligence board, integrated media block, integrated cinema processor, integrated motor control board, and marriage interlock switch.

Estimated replacement time: 20 minutes

1. Turn the projector off and disconnect it from AC power.
2. *Remove the top skin* (on page 33).
3. *Remove the high security and light engine covers* (on page 41).
4. Remove the light engine blower.
5. Disconnect the three light engine harnesses.
6. Disconnect the harness from the backplane.
7. Remove the five screws securing the card cage.

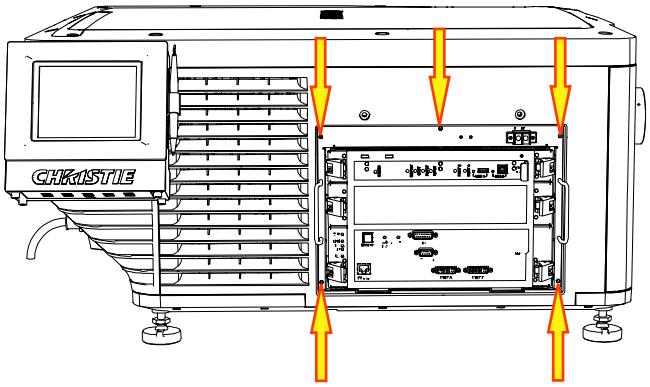

8. Loosen the two screws and remove the fire alarm interlock jumper.

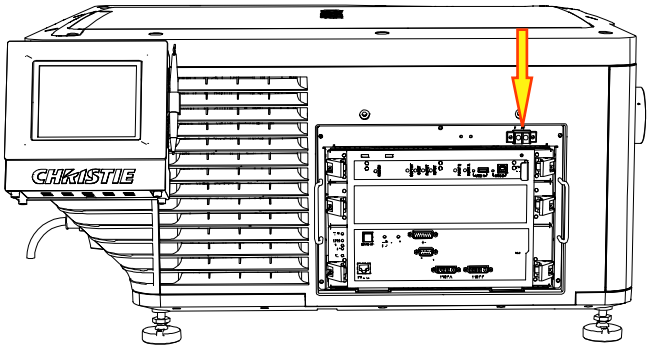

9. Pull up the release screw and slide the card cage out along the guides using the handles.

Ensure the internal harnesses from the electronics do not get snagged or pinched against the sides of the card cage assembly as it is being pulled out, as this can cause damage to the wiring.

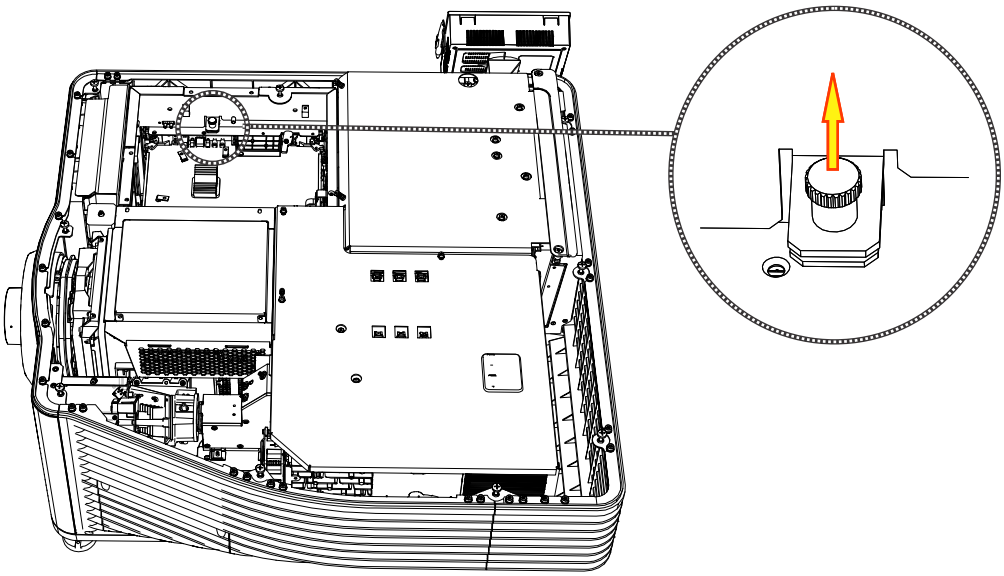

10. Tilt the card cage up and pull out to remove it.
11. To replace the card cage, complete these steps in reverse order.

Adjusting boresight

Perform a boresight adjustment when the image cannot be focused uniformly on the screen by aligning the projector to the screen and focusing the lens.

Ensure that the projector is perpendicular to the screen before adjusting boresight.

Ensure that the boresight set screws are adequately tightened. Not adequately tightening the screws can result in excessive on-screen image vibration. After adjusting boresight, evaluate the on-screen image vibration and re-adjust if needed.

1. Remove the lens surround.
2. *Display the DC2K Boresight test pattern* (on page 87).
   This test pattern assists with adjusting the boresight for the three focus points.

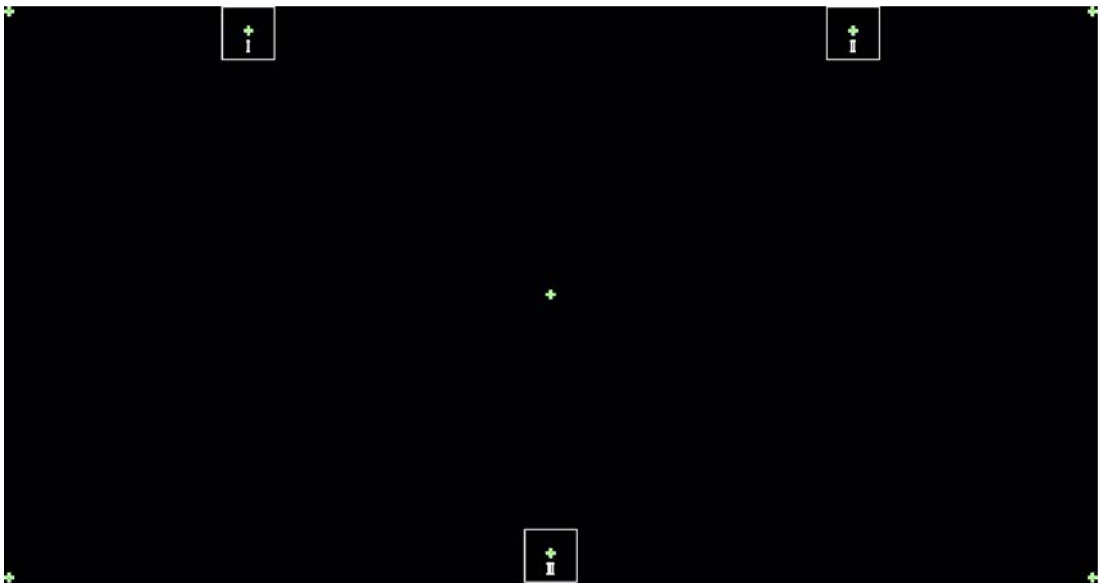

3. Set the zoom of the lens so the test pattern fills the screen size.
4. Set the lens focus to the middle of its range.
5. Loosen the three set screws (A, B, C).

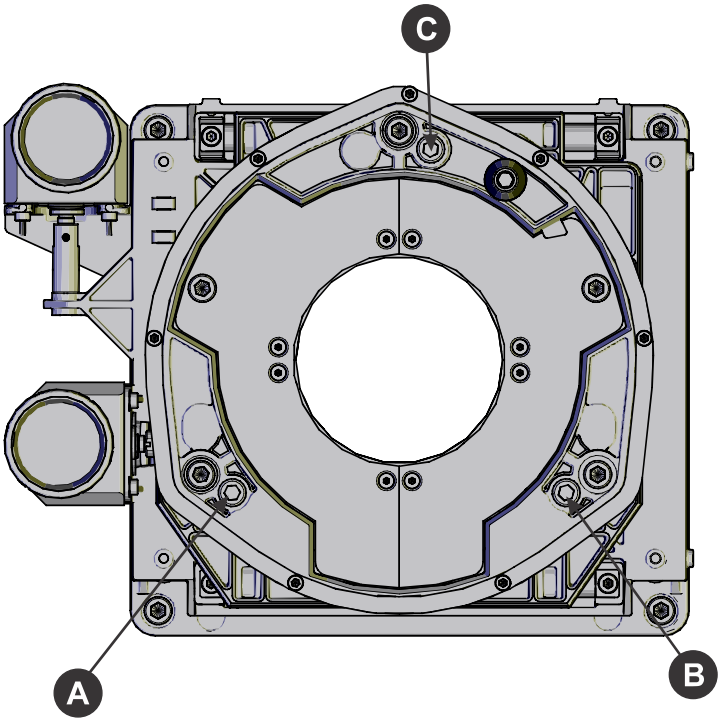

6. To focus the position I boresight guide, adjust the bottom-left boresight cap screw (D).

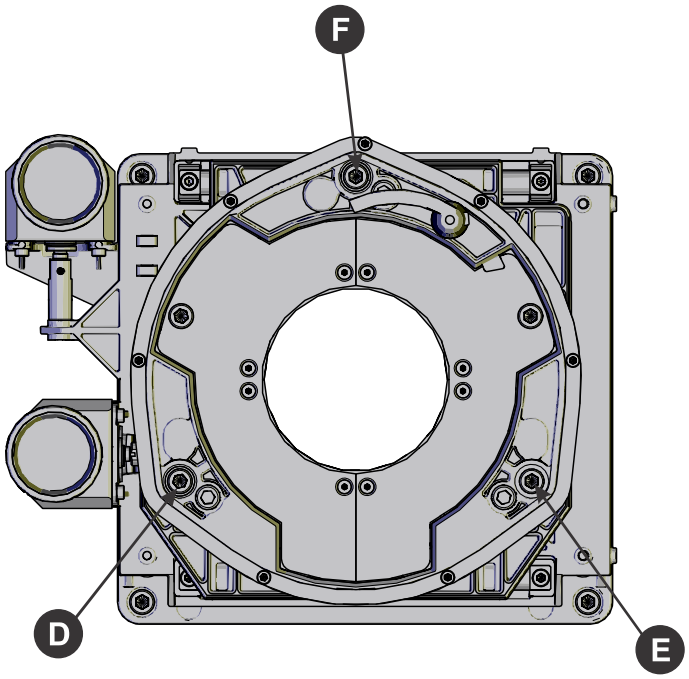

7. To focus the position II boresight guide, adjust the bottom-right boresight cap screw (E).
8. To focus the position III boresight guide, adjust the top boresight cap screw (F).

   Turning the screws in small amounts (1/4 to 1/8 of a turn) allows you to make precise adjustments.
9. To continue to refine the focus, repeat steps 6 to 8.
10. On the test pattern, check the center guide. If it is not in focus, adjust the focus on the lens.
11. Once all guides on the test pattern are in focus, tighten the set screws.

    If the focus on the test pattern changes after tightening the set screws, adjust the lens focus again and adjust the three cap screws slightly.
12. Replace the lens surround.

Replacing the high security door interlock switch

The high security door interlock switch is located directly underneath the high security door lock. It activates when you lock or unlock the door with the high security key.

Estimated replacement time: 7 minutes

1. Turn off the projector and disconnect it from AC power.
2. *Remove the top skin* (on page 33).
3. *Remove the high security cover* (on page 41).
4. Disconnect the red and black leads from the switch.
5. Remove the two nuts securing the switch to the frame and then remove the interlock switch.
6. To replace the high security door interlock switch, complete these steps in reverse order.

Optics

Learn how to replace the light source, mirrors, and other optical components.

Inspecting and cleaning optics

Inspect and clean optical components such as the projection lens to ensure optimum image display.

Unnecessary cleaning of optics can increase the risk of degrading delicate coatings and surfaces. A small amount of dust or dirt on the lens has minimal effect on image quality-to avoid the risk of scratching the lens, clean the lens only if absolutely required.

Typically, optical components do not need to be cleaned frequently if they are installed and operated in a location that meets or exceeds the environmental standard recommended by Christie. Christie recommends that all cinema projectors are installed and operated in an environment that meets or exceeds Underwriters Laboratories (UL) standard 609.50 Pollution Degree 2 and ISO Class 9 Standard for Office Environments.

Notice. If not avoided, the following could result in property damage.

- Christie products must be installed and serviced by Christie qualified technicians.
- Do not reuse lens tissues.
- Always handle optics by their edges.

Recommended service kit

Use the following recommended tools to clean the optics.

- Powder-free latex gloves
- Soft camel-hair brush
- Dust-free blower - air bulb or a canned air duster without additives such as Techspray 1671-10S Ultra-Pure Duster
- Lint-free lens tissue, such as Lensx 90 tissue or Newport Optics cleaning tissue
- Lens cleaning solution and a microfiber cloth (for the lens only)
- Optical grade cotton swabs with wooden stems
- A bright, portable illumination device such as an LED flashlight

Cleaning the lens

To avoid the risk of scratching the lens, clean the lens only if absolutely required.

Removing dust from the projection lens

Remove dust from the projection lens to ensure optimum image display.

1. Brush most of the dust off with a camel-hair brush or use a dust-free blower.

2. Fold a microfiber cloth and wipe the remaining dust particles off the lens with the smooth portion of the cloth that has no folds or creases.

   Do not apply finger pressure. Instead, use the tension in the folded cloth to remove the dust.
3. If significant dust remains on the lens surface, dampen a clean microfiber cloth with lens cleaning solution and wipe gently until clean.

Removing fingerprints, smudge, or oil from the projection lens

Remove fingerprints, smudges, or oil from the projection lens to ensure optimum image display.

Clean the lens only if absolutely required.

1. Brush most of the dust off with a camelhair brush or use a dust-free blower.
2. Wrap a lens tissue around a swab and soak it in lens cleaning solution.

   The tissue should be damp but not dripping. Do not use a cleaning solvent that contains ammonia. Avoid lens contact with Xylene and Ether.
3. Gently wipe the surface using a figure eight motion.
4. Repeat until the blemish is removed.

Replacing fold mirror one

Fold mirror one is accessed from the front left-corner of the projector. The alignment screws are positioned along the top of the light tube, which allows them to be adjusted.

Estimated time to replace: 16 minutes.

1. Turn off the light and cool the projector for at least 15 minutes.
2. Turn off the projector and then disconnect it from AC power.
3. *Remove the top skin* (on page 33).
4. *Remove the exhaust panel skin* (on page 39).
5. *Remove the light sensor module* (on page 62) and move it aside.
6. *Remove the contrast aperture* (on page 80).
7. Remove the four screws securing the fold mirror to the illumination optic system (IOS).
8. Loosen the locking hex screw and remove the two hex screws securing the fold mirror to the bracket.
9. Remove the fold mirror.

   Wear gloves when you handle the fold mirror.
10. To replace the fold mirror, complete these steps in reverse order.

    When reinstalling the fold mirror, make sure the reflective surface faces inward.

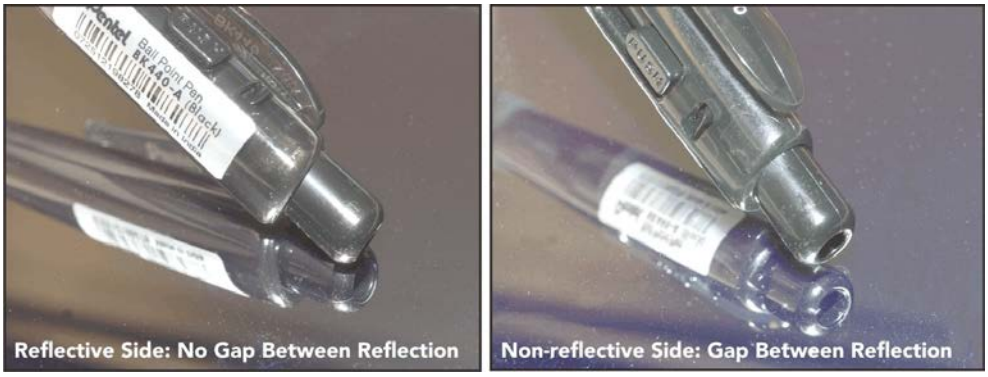

11. Recalibrate the Measured Color Gamut Data (MCGD) settings following the procedure provided in the *CP2208-LP User Manual (P/N: 020-102150-XX)*.

Replacing fold mirror two

Fold mirror two is located underneath the illumination optic system (IOS).

Estimated time to replace: 16 minutes.

1. Turn off the lamp and cool the projector for at least 15 minutes.
2. Turn off the projector and disconnect it from AC power.
3. *Remove the top skin* (on page 33).
4. *Remove the IOS* (on page 80).
5. Remove one of the screws from each of the three tabs on fold mirror two.
   Wear gloves when you handle the fold mirror.
6. Loosen the remaining screws from each of the three tabs.
7. Hold the mirror in place and swing the tabs out to the side.
8. Carefully lower the mirror to remove it.
9. To replace the fold mirror, complete these steps in reverse order.
   When reinstalling the fold mirror, make sure the reflective surface faces inward.

Replacing the light module

The light module provides the light source for the projector.

Estimated time to replace: 85 minutes.

1. Turn off the light and cool the projector for at least 15 minutes.
2. Turn off the projector and disconnect it from AC power.
3. *Remove the exhaust panel skin* (on page 39).
4. *Remove the rear skin* (on page 38).
5. Disconnect the inline connectors of the PH HSINK TOP (fan 11) and PH HSINK BOT (fan 12) fans.

6. Remove the six M6 hex head screws (A-F) securing the brackets that connect the light module to the illumination optics system (IOS).

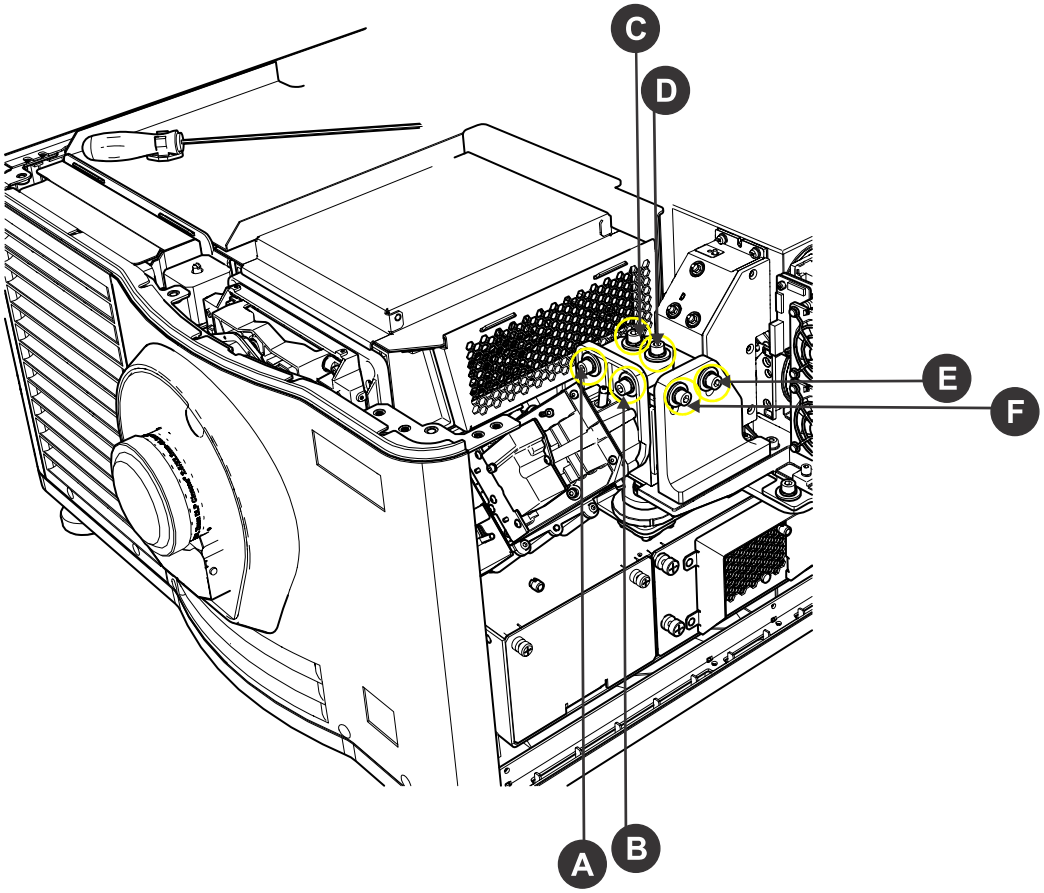

7. Disconnect the inline connectors of fans H-PIPE TOP (Fan 7), H-PIPE BOT (Fan 8), PSU EX R (Fan 9) and PSU EX L (Fan 10) and release from the cable routing clamps.
8. Remove the two M4 hex heads screws securing the fan bracket for H-PIPE TOP (Fan 7), H-PIPE BOT (Fan 8).
9. Disconnect the two quick disconnects between the light module and the radiator and pump and release the tubing from the cable routing clamps.
10. Disconnect the following connections from the laser driver board:
    - CN200
    - CN206
    - CN207
    - CN208
    - CN209
    - CN220
    - CN806
    - CN809

- CN810
- CN812
- CN813
- CN814

11. Loosen the two P-clips and rotate them out of the way.
12. Loosen the six M4 hex head captive screws securing the light module to the mounting plate.
13. Pull the light module back and up in the two hand position, being sure to clear the light module adjuster located at the rear, left of the projector.
14. Remove the light module.
15. To replace the light module, complete these steps in reverse order.

Aligning the light module

Aligning the light module ensures that the light source is correctly positioned on the optical path.

Complete this task after replacing the light module, or when you cannot eliminate on-screen shadows with a fold mirror or L1 lens adjustment.

1. *Remove the top skin* (on page 33).
2. On the touch panel controller (TPC), tap **Menu** > **Advanced Setup** > **Light Power/LiteLOC Setup**.
3. In the Power % field, set the light source power to **40%**.
4. Tap **Save**.
5. *Display the DC2K 17 Point test pattern* (on page 87).
6. Loosen the locking screws on the brackets connecting the light module to the illumination optics system (IOS) (A-F), light module adjuster assembly (G-I), the L1 lens, and the fold mirror.

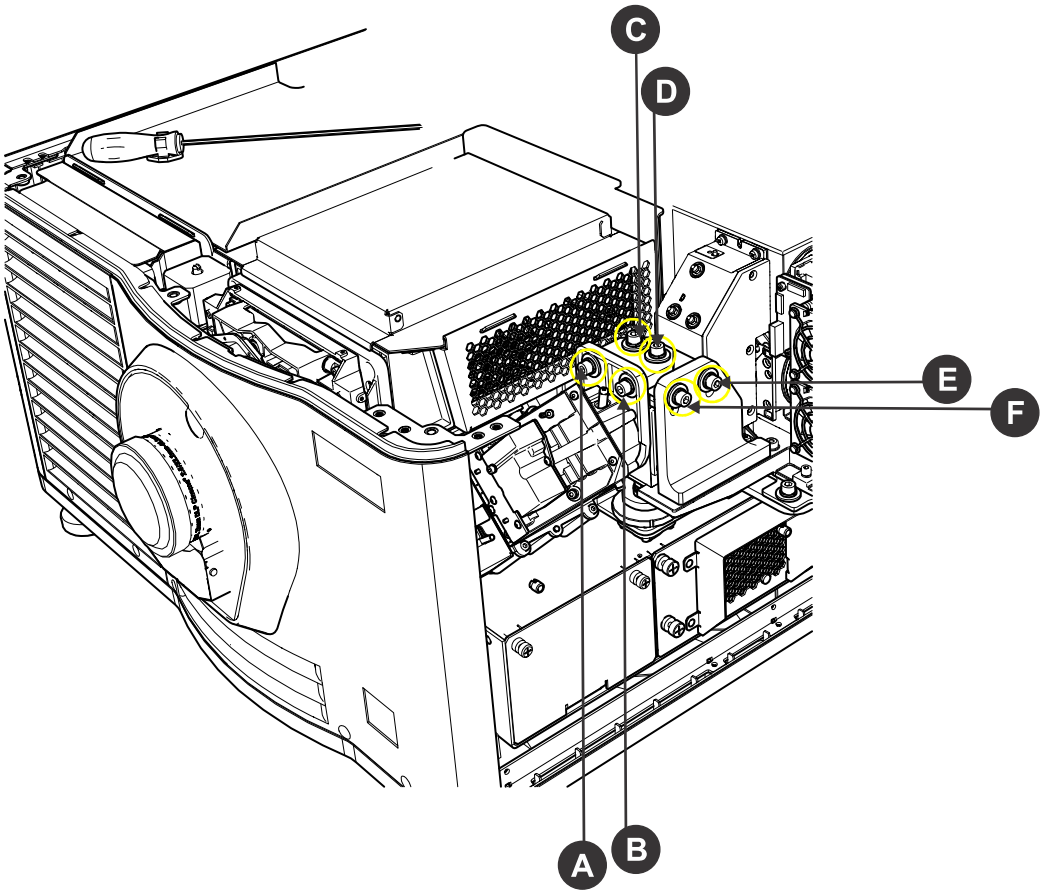

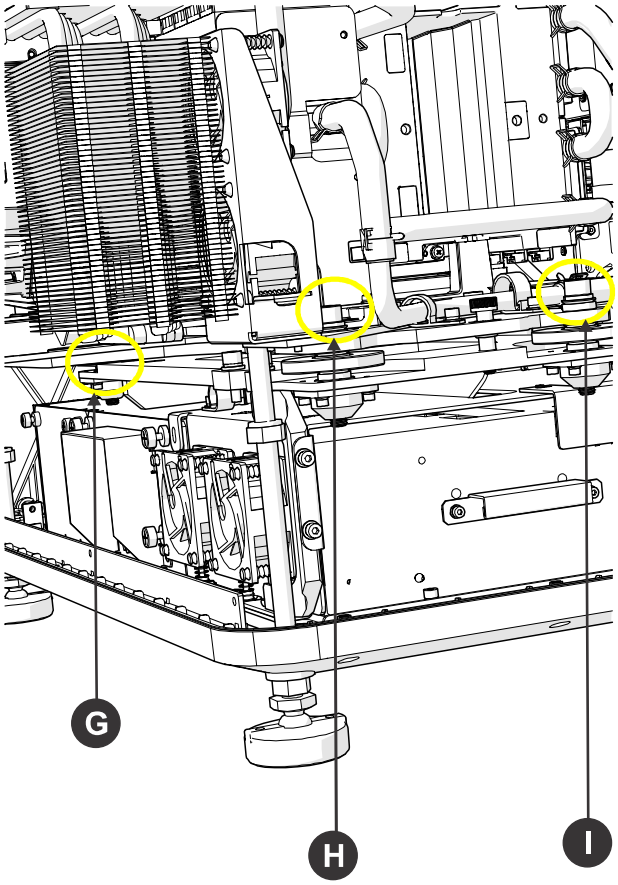

7. Adjust the fold mirror until the black corners are visible.
8. Move the L1 lens until the corners and edges of the test pattern are sharp.
9. Tighten the lens screws but not fully.
10. Set the nominal position between each light module adjuster wheel and the metal base plate by turning the wheel until you can just fit a 5 mm Allen key underneath it.

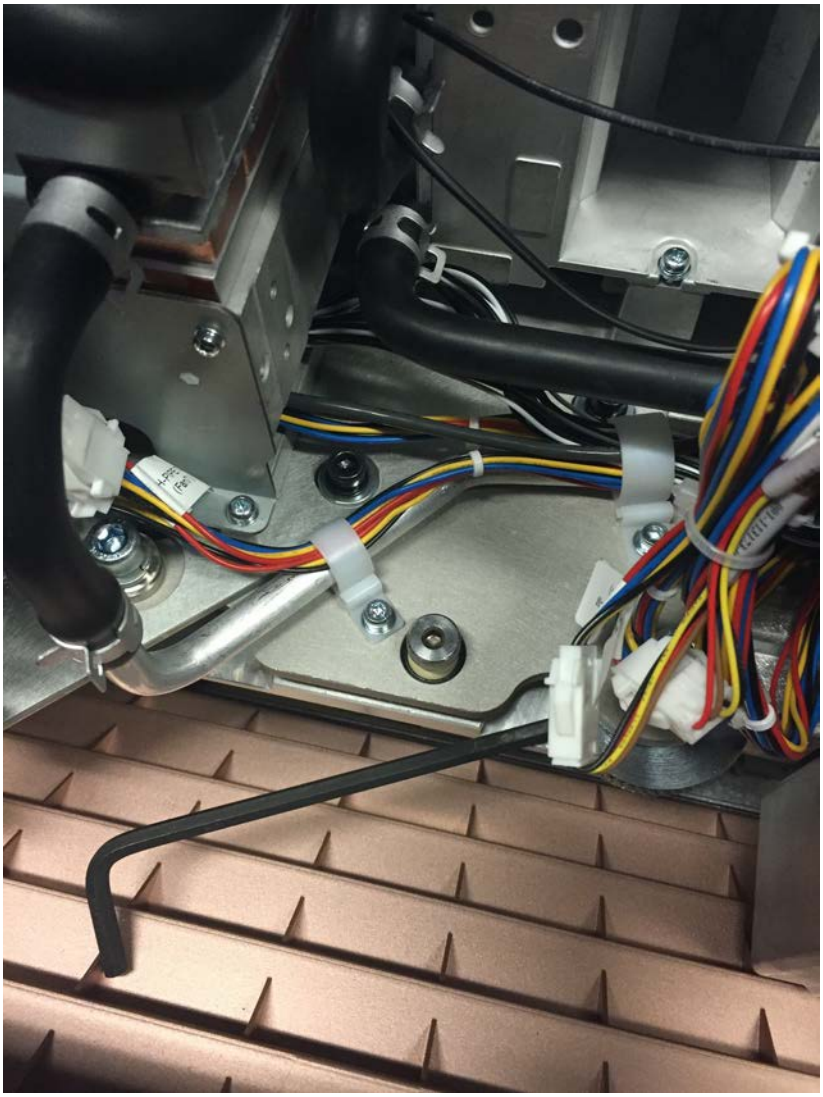

11. Adjust the fold mirror a second time.
12. Straighten the bottom line of the test pattern using the light module adjuster wheels.
13. Move the L1 lens again until the corners and edges of the test pattern are sharp.
14. Tighten the lens screws but not fully.
15. Adjust the fold mirror a third time, until you get a maximum screen size and all four corners of the screen are fully lit.
16. Adjust the front of the light module up and down with the adjuster wheel closest to the lens, to shift the light left and right.
17. Tighten the locking bolt (G) at the front of the light module.
18. Tighten the right-side locking screw (I) at the rear of the light module.
19. Tighten the left-side locking screw (H) at the rear of the light module.
20. Fully tighten the L1 lens screws.
21. Quarter-turn each light module bracket screw (A-F) until the brackets are secured in place.

22. Adjust the fold mirror for the final time.
23. Tighten the fold mirror set screws.

Replacing the shutter assembly

The shutter assembly is mounted directly on the light engine. It can be removed with the light engine or removed by itself

Estimated time to replace: 10 minutes.

1. *Remove the lens* (on page 78).
2. *Remove the top skin* (on page 33).
3. *Remove the high security and light engine covers* (on page 41).
4. Disconnect the shutter assembly harness from inline connector.
5. Release the one #1 Phillips self retaining screw from the light dump and remove it.
6. Remove the two 3 mm hex head screws securing shutter assembly bracket to the light engine.
7. Angle the shutter assembly up and out.
8. To replace the shutter assembly, complete these steps in reverse order.

Replacing the light engine assembly

The light engine modulates incoming light from the light source to create an image, which is projected to the screen.

Estimated time to replace: 25 minutes.

1. Turn the projector off and disconnect it from AC power.
2. *Remove the lens* (on page 78).
3. *Remove the top skin* (on page 33).
4. *Remove the high security and light engine covers* (on page 41).
5. Remove the light engine blower assembly.
6. Loosen the captive screw securing the light dump and remove it.

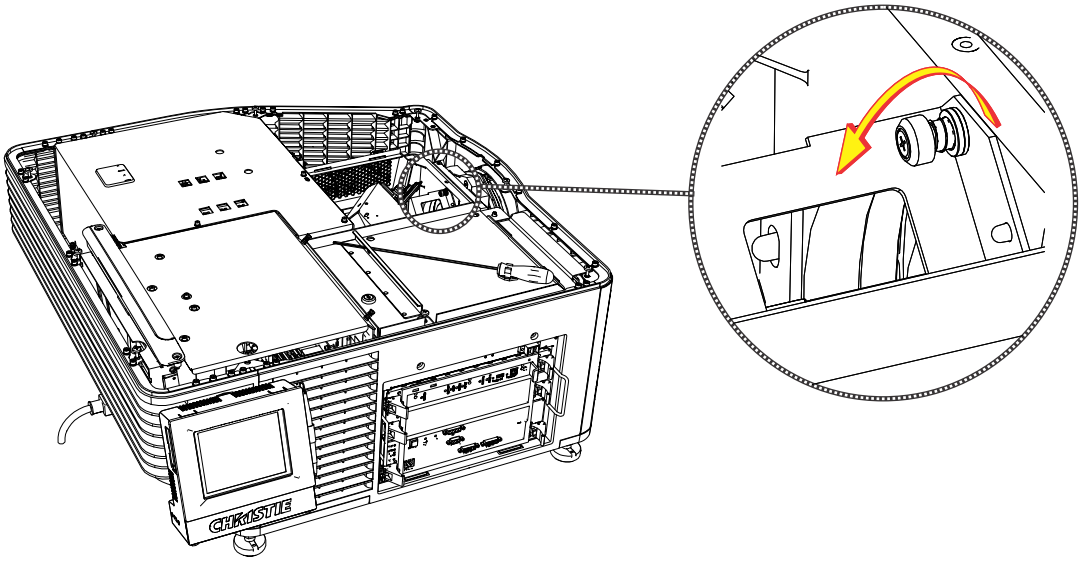

7. Disconnect the shutter assembly harness.
8. Disconnect the SAMTEC cables from the backplane board.
9. Remove the SAMTEC cables from the harness clips holding them to the center structure.
10. Attach the service handle (A) to the light engine (B).

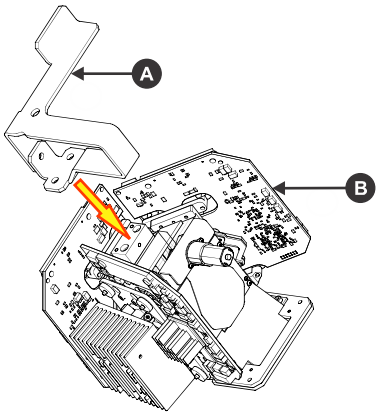

11. Loosen the three captive screws securing the light engine to illumination optic system (IOS) assembly.
12. Remove the light engine.
13. Remove the shutter assembly by removing the two screws securing the shutter bracket to the new light engine.
14. To replace the light engine assembly, complete these steps in reverse order.

Replacing the lens

The lens seals the projection head, preventing contaminants from entering the main electronics area. Do not operate the projector without a lens installed. Install a lens plug when you install or transport the projector.

1. On the touch panel controller (TPC) Main screen, tap and hold the red power button to turn off the light source and projector.
2. Allow the light source to cool for a minimum of 15 minutes.
3. Disconnect the projector from AC power or turn the circuit breaker off.
4. Remove the lens surround.
5. Install the lens cap and turn the lens clamp to the open position with a hex key.
6. If necessary, remove the two cap screws securing the lens to the lens mount using a hex key.

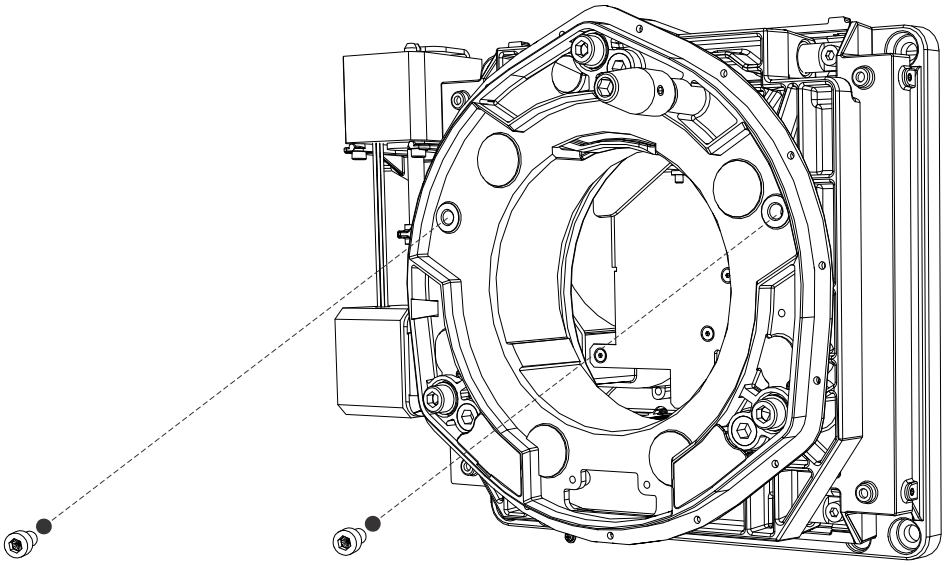

7. Pull the lens out of the lens mount and then install a small lens cap on the rear of the lens.
8. Remove the small rear cap from the new lens.
   Keep the front cap on.
9. Align the tabs on the lens plate with the lens mount.
10. Insert the lens until it connects with the magnets on the mount.
    When the lens contacts the magnetic plates it is seated correctly.
11. Secure the lens clamp by rotating it clockwise with a hex key.
12. Tighten the lens mount cap screws for added stability.
13. Replace the lens surround.
14. Remove the lens cap from the front of the lens.

Replacing the lens mount

The lens mount secures a projection lens to the projector.

Estimated time to replace: 20 minutes.

1. Center the lens to make sure the lens mount screws are accessible.
2. Turn off the light and cool the projector for at least 15 minutes.
3. Turn off the projector and disconnect it from AC power.
4. Remove the lens.
5. *Remove the top skin* (on page 33).
6. Remove the plate between the lens mount and the blower intake.
7. *Remove the front skin* (on page 34).
8. *Remove the high security cover* (on page 41).
9. *Remove the card cage* (on page 64).
10. Disconnect the nine integrated motor control board (IMCB) connectors.
11. Remove the four screws securing the light engine blower and set aside.
12. Disengage the IMCB harness assembly from the cable clamps and feed the cable assemblies through the front of the projector.
13. Remove the four lens mount screws.

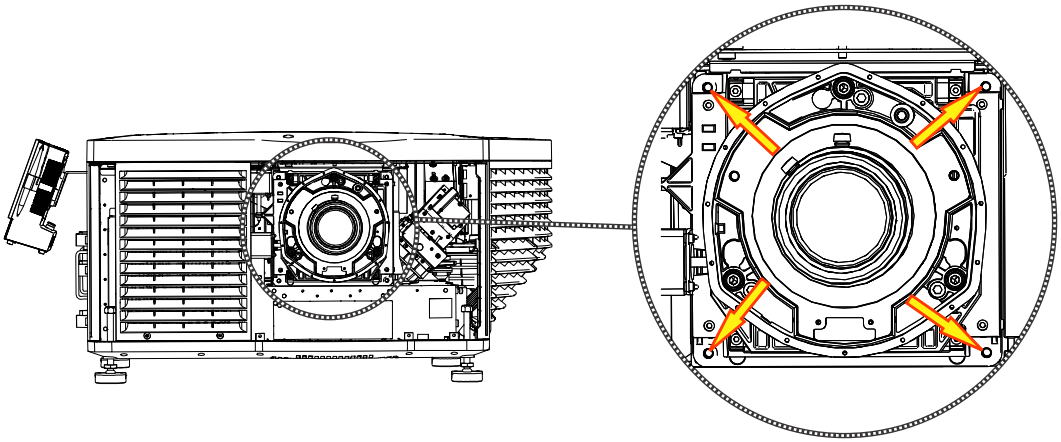

14. Remove the lens mount.
15. To replace the lens mount, complete these steps in reverse order.

Replacing the yellow notch filter

The yellow notch filter (YNF) is located in the light path just after the contrast aperture.

Estimated time to replace: 15 minutes.

1. *Remove the top skin* (on page 33).
2. *Remove the front skin* (on page 34).
3. Loosen the captive screw and remove the top skin off the YNF.

4. Remove the screw inside the YNF, connecting the housing to the illumination optic system (IOS).
5. Remove the two screws underneath the YNF, connecting the housing to IOS.
6. Remove the YNF assembly.
7. To replace the YNF, complete these steps in reverse order.

Replacing the illumination optic system

The illumination optic system (IOS) is a magnesium frame that holds the light engine. The light tube and most optical components are fastened to the IOS. All components except the second fold mirror can be removed on their own; therefore, the need to replace the IOS is low.

Estimated time to replace: 100 minutes.

1. *Remove the light module* (on page 70).
2. *Remove the light engine* (on page 76).
3. *Remove the light sensor module* (on page 62).
4. *Remove the contrast aperture* (on page 80).
5. *Remove the yellow notch filter* (on page 79).
6. Disconnect the nine lens mount harnesses from the integrated motor control board (IMCB) and feed through the front access hole.
7. Remove the four 5 mm hex head screws securing the laser phosphor module adjustment plate.
8. Remove the three 5 mm hex head screws securing the light engine housing casting.
9. Remove the two 3 mm hex head screws securing the fire wall to the light engine casting.
10. Lift up and out the light engine casting assembly.
11. Remove the four 5 mm hex head screws to release the IOS assembly.
12. To replace the IOS, complete these steps in reverse order.

Replacing the contrast aperture

the contrast aperture is a metal insert that acts like a cats eye to improve the contrast ratio of the projector.

Estimated time to replace: 18 minutes.

1. *Remove the yellow notch filter (YNF)* (on page 79).
2. Remove the three 2 mm hex head screws connecting the contrast aperture to the frame the of illumination optic system (IOS).

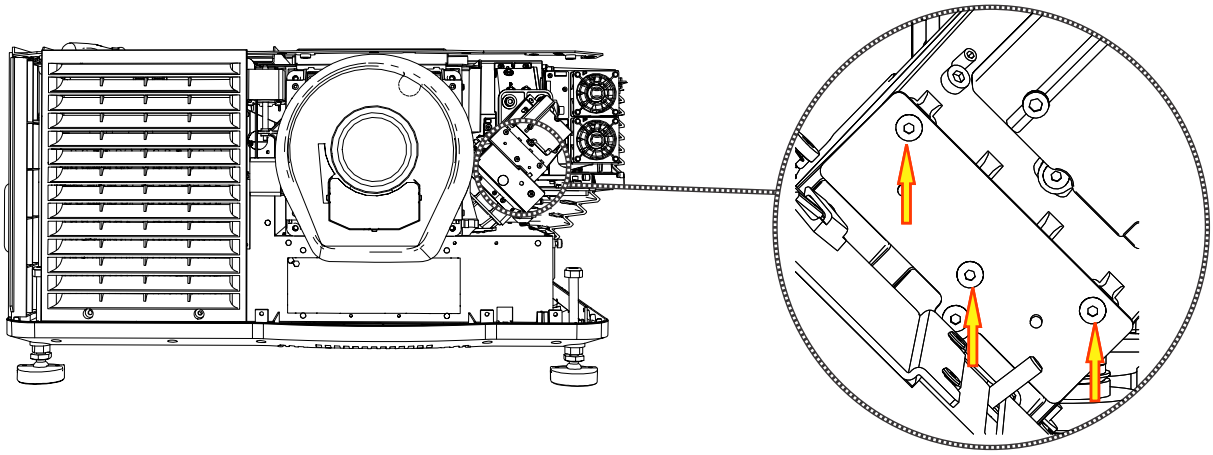

3. Remove the contrast aperture.
4. To replace the contrast aperture, complete these steps in reverse order.

Power supplies

Learn how to replace power related components.

Replacing the low voltage power supply

The low voltage power supply (LVPS) provides power to the light module.

Estimated time to replace: 30 minutes

1. *Remove the LVPS fan* (on page 52).
2. Pull the LVPS out to access the LVPS power connections.
3. Lift the protective cover and disconnect all the DC connection wires attached to the LPVS, the LVPS inline AC connection, and the AC connection to the standby power supply.
4. Slowly remove the LVPS and the standby power supply, while releasing the two cable clamps securing the standby power supply harness.
5. Remove the four screws from the bottom of the mounting plate to free the LVPS.
6. Remove the LVPS.
7. To replace the LVPS, complete these steps in reverse order.
8. Perform a ground bond/continuity check using the continuity setting on a digital multimeter to verify the connection between the ground prong of both the input A and B inlets and the projector chassis.

   Ensure that all power is disconnected from the projector and both the AC inlet bracket and rear skin are attached to the projector. Check between the AC inlet ground and card cage external connectors.

Replacing the standby power supply

The standby power supply is installed next to the low voltage power supply (LVPS).

Estimated time to replace: 50 minutes

1. Remove the LVPS.
2. Loosen the two captive screws securing the light engine filter access door and remove.
3. *Remove the card cage* (on page 64).
4. Disconnect the inline connector for the standby power supply harness.
5. Remove the two standby power supply bracket screws and remove the bracket.
6. Remove the standby power supply.
7. To replace the standby power supply, complete these steps in reverse order.

Replacing the AC input assembly

The AC input assembly is located at the rear of the projector.

Estimated time to replace: 20 minutes

1. Unplug the projector.
2. *Remove the top skin* (on page 33).
3. *Remove the rear skin* (on page 38).
4. Reach into the projector and unplug the AC input assembly harnesses from fuse board A and fuse board B.

   The fuse boards are located in front of the radiator fan pack assembly.

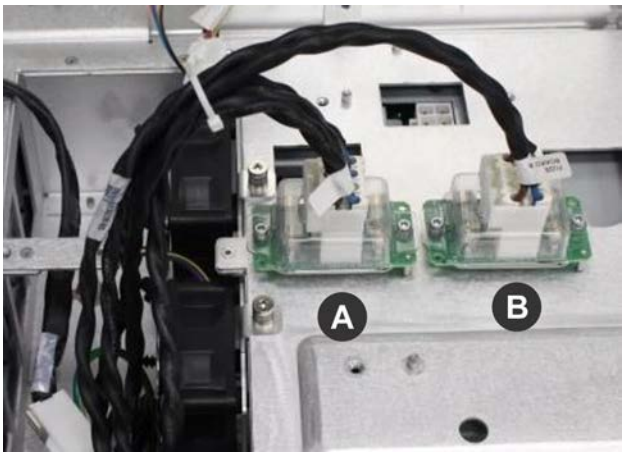

5. Remove the two screws securing the metal baffle mounted underneath the AC input assembly, and remove it.

6. Remove the two counter sunk screws (A) on the AC mounting bracket.
7. Remove the two 3 mm hex head screws (B) securing the AC mounting bracket.

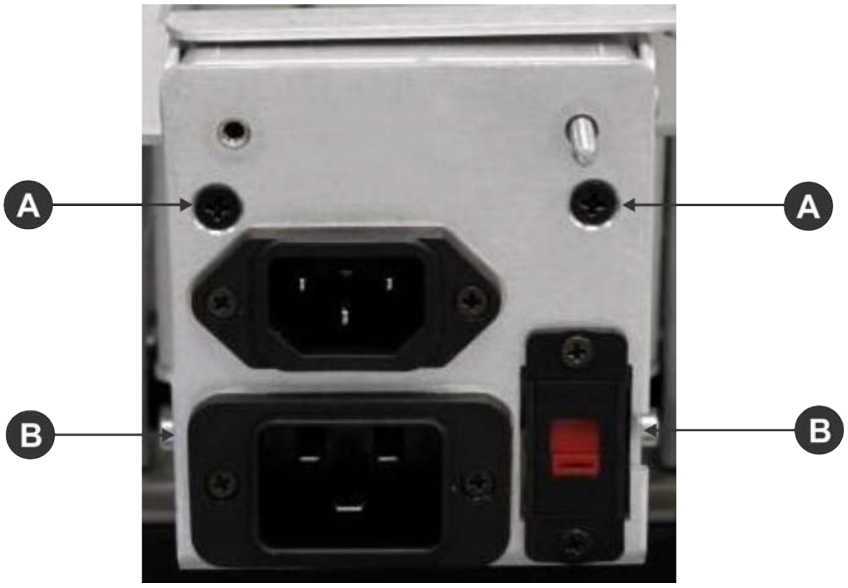

8. Pull the assembly forward and down to gain access to connectors.
9. Disconnect the inline switch harness connector.

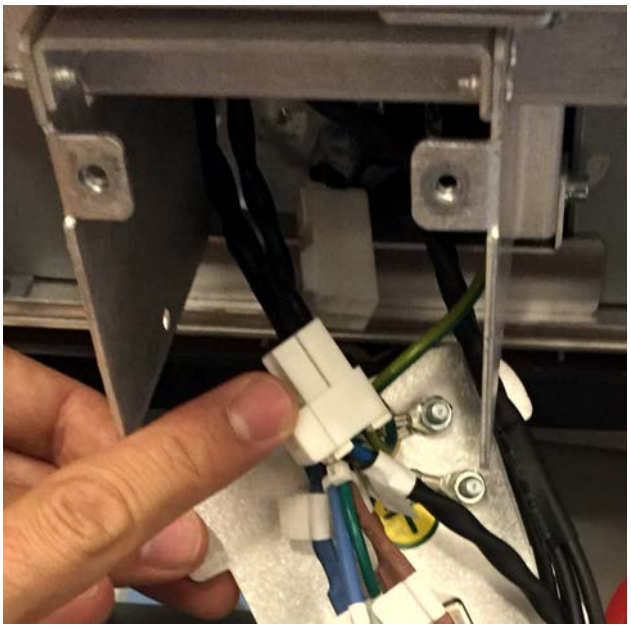

10. Disconnect the AC input power cord connector.

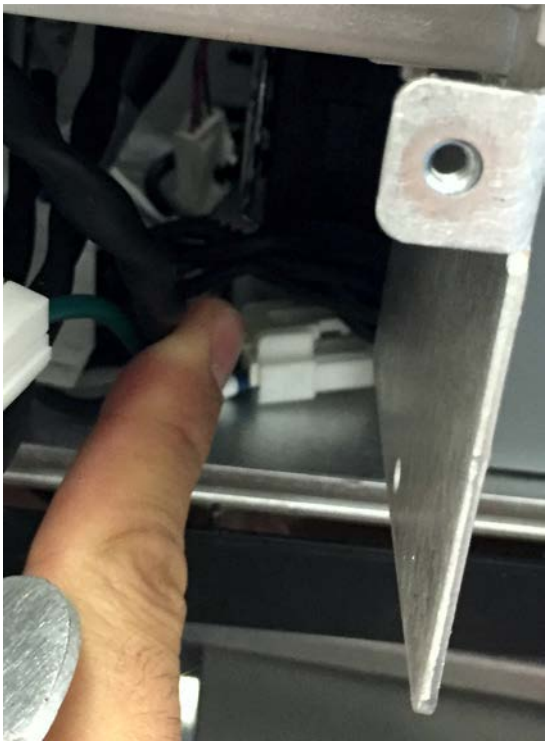

11. Pull the assembly out of the projector.
12. To replace the AC input assembly, complete these steps in reverse order.

Replacing the power factor correction unit

The power factor correction (PFC) unit is located behind the radiator fans.

Estimated replacement time: 60 minutes.

1. *Remove the radiator fans* (on page 53).
2. Disconnect the blue harness connection behind the laser driver board bracket from the PFC unit.
3. Disconnect the fuse boards A and B harness.
4. Release the cables from the P-clip at the bottom right-hand corner of the laser driver board.
5. Disconnect the 12 VAC sense harness from the PFC unit.
6. Remove the screw securing the radiator tubing P-clip.
7. Release the two screws securing the PFC fan bracket assembly.
8. Lift the PFC fan bracket assembly up and out of the way.
9. With the long 3 mm hex driver, push down on the tab to release the PFC PM harness and disconnect from the PFC unit.
10. Remove the two screws securing the AC input cover plate.
11. Remove the two screws securing the middle cover plate.

12. To release PFC Unit from the mounting plate, remove the two 3 mm hex head screws with a 3 mm Allen key.
13. Release the cables from the P-clip between the PFC unit and the PS unit.
14. Pull the PFC unit through the rear of the projector.
15. Release the cable from CN102 from PFC unit and route it through the PFC chassis.
16. To remove PFC unit alignment bracket, remove the two 3 mm hex head screws.
17. Transfer the PFC unit alignment bracket to the new service assembly.
18. To replace the PFC unit, complete these steps in reverse order.

Replacing the power supply unit

The power supply (PS) unit provides the required voltages for operating the light module.

Estimated time to replace: 60 minutes.

1. *Remove the radiator fans* (on page 53).
2. Disconnect the fuse boards A and B harness.
3. Remove the screw securing the radiator tubing P-clip.
4. Release the two screws securing the power factor correction (PFC) fan bracket assembly.
5. Lift the PFC fan bracket assembly up and out of the way.
6. Remove the two screws securing the AC input cover plate.
7. Remove the two screws securing the middle cover plate.
8. To release the PS unit from the mounting plate, remove the two 3 mm hex head screws with a 3 mm Allen key.
9. Release the cables from the P-clip between the PFC unit and the PS unit.
10. Remove the four screws securing the +/- voltage to the PS unit.
11. Remove the connector CN205 (white connector) from the PS unit.
12. Pull the PS unit through the rear of the projector.
13. Release the four connectors from CN102 (one from each of the four PS PC boards) and route it through the PS unit chassis.
14. To remove PS unit alignment bracket, remove the two 3 mm hex head screws.
15. Transfer the PS unit alignment bracket over to the new service assembly.
16. To replace the PS unit, complete these steps in reverse order.

Test patterns

Use the projector to assist with configuration of the projector and to diagnose any issues that may occur.

Adding or removing preferred test patterns

Add or remove test patterns from the Preferred Test Patterns pane.

1. On the touch panel controller (TPC), log on to the projector with administrator or service permissions.
2. Tap **Menu** > **Administrator Setup** > **Preferred Test Pattern Setup**.
3. To add a test pattern to the Preferred Test Pattern pane, tap and drag a test pattern from the Unselected Patterns list to User Selected pane.
4. To remove a test pattern from the Preferred Test Pattern pane, tap and drag a test pattern from the User Selected pane to the recycle bin in the bottom right corner.

Turning a test pattern on or off

Test patterns are available to assist with the configuration of the projector and to diagnose any issues that may occur.

1. In the touch panel controller (TPC) task bar, tap the **Test Pattern** icon:

   

2. Tap **All Test Patterns**.
3. To turn a test pattern on, in the Preferred Test Patterns pane, tap the test pattern.
4. To turn the test pattern off, tap **Test Pattern Off**.

Displaying a full screen test pattern

Some test patterns fill the screen instead of a portion of it.

1. In the touch panel controller (TPC) task bar, tap the **Test Pattern** icon:

   

2. Tap **All Test Patterns**.
3. To turn the test pattern on, in the Preferred Test Patterns pane, double-tap the test pattern.
4. Tap **Full Screen (Ignore screen file settings)**.

CP2208-LP Specifications

Learn about the product specifications. Due to continuing research, specifications are subject to change without notice.

Physical specifications

Learn the dimensions and weight of the projector.

Item	Description
Size (L x W x H) (without the lens, and with the feet at minimum length)	828 mm (32.6 inches) x 822 mm (32.4 inches) x 414 mm (16.3 inches)
Weight (with lens removed)	73 kg (161 lbs)
Shipping weight	101 kg (223 lbs)
Touch panel controller (W x H x D)	195 mm (7.68 inches) x 148 mm (5.83 inches) x 44.4 mm (1.75 inches)

Power specifications

Learn the power requirements for the projector.

AC input (A)

Item	Description
Voltage range	200 - 240 VAC
Line frequency	50/60 Hz
Inrush current	100 A maximum (at 240 VAC)
Current consumption	10 A maximum (at 200 VAC)
Power consumption	2000 W maximum
Current rating of AC input	IEC-320-C19/16 A of IEC inlet

UPS AC input (B)

Item	Description
Activation	Discrete switch
UPS inlet connector (rating for powering main electronics)	IEC-320-C13/10 A, 240 VAC
UPS type	Universal 100-240 VAC
Line frequency	50/60 Hz
Inrush current	100 A maximum (at 240 VAC)
Current consumption	3 A maximum (at 100 VAC)
Power consumption	300 W maximum

Environmental specifications

Learn about the environment requirements for the projector while operating and not operating.

Operating environment

Item	Description
Temperature	15°C to 35°C (59°F to 95°F) from 0 - 500 meters, 15°C to 28°C (59°F to 82°F) from 500 - 3000 meters
Humidity (non-condensing)	20% to 85%
Altitude	0 - 3000 meters

Non-operating environment

Item	Description
Temperature	-20°C to 60°C (-4°F to 140°F)
Humidity (non-condensing)	0% to 85%
Altitude	0 - 15000 meters

Display specifications

Learn the display specifications of the projector.

Panel resolution and refresh rate

Pixel format (H x V square pixels)	2048 x 1080
Processing path	23.97 - 240Hz

Achievable contrast ratio

400:1 ANSI
1700:1 Full Frame ON/OFF

Color and gray scale

Displayable colors	35.2 trillion
Gray scale resolution	45 bits total linear, 15 bits per RGB component

White point

Nominal White (full white, after calibration to telecine mode, theaters)
x = 0.314 ± 0.006
y = 0.351 ± 0.006

Gamma

Theater (nominal)	2.6 ± 5%

Control signal compatibility

Learn the control signal compatibility for the projector.

Ethernet port

Interface	10Base-T/100-Base-TX
Connector	Female RJ-45
Bit Rate	10 Mbps or 100 Mbps half and full duplex

RS232-PIBS1

Interface	TIA-232
Connector	9-pin subminiature D, female
Bit Rate	115,200 (default) bps
Flow Control	Hardware (RTS/CTS)
Data Format	1 start bit, 8 data bits, 1 stop bit, no parity
Communication Protocol	Christie Serial Protocol

3D terminal

Interface	Proprietary 3D connector
Connector	15-pin subminiature D, female
Bit Rate	1,200 bps
Data Format	1 start bit, 8 data bits, 1 stop bit, no parity
Communication Protocol	RS232 and GPIO

Touch panel controller specifications

Learn the specifications of the touch panel controller.

Type of Display	Color VGA TFT LCD, backlit
Display Size	144.8 mm (5.7 inches) diagonal
Display Resolution (H x V pixels)	640 x 480
Maximum Dimensions (W x H x D)	195 mm x 148 mm x 44.4 mm
Integrated Operating System	Microsoft Windows® XPe
Communication Interface with Projector	10/1000Base-T Ethernet
Power Requirement	1.02 A maximum at 24 VDC (+/- 10%)
Interface Connector	12-pin Circular connector (push-pull)

Regulatory

This product conforms to the latest regulations and standards related to product safety, environmental requirements, and electromagnetic compatibility (EMC).

Safety

- CAN/CSA C22.2 No. 60950-1
- ANSI/UL 60950-1 - Information Technology Equipment – Safety – Part 1: General Requirements
- IEC 60950-1 IEC/EN 60950-1 - Information Technology Equipment – Safety – Part 1: General Requirements
- EN 60950-1
- IEC 60825
- IEC 62471-5

Electro-magnetic compatibility

Emissions

- FCC CFR47, Part 15, Subpart B, Class A - Unintentional Radiators
- CAN ICES-003 (A)/NMB-003 (A) - Information Technology Equipment (Including Digital Apparatus) - Limits and Methods of Measurement
- CISPR 22/EN 55022, Class A

Immunity

- CISPR 24/EN55024 EMC Requirements

Environmental

EU Directive (2011/65/EU) on the restriction of the uses of certain hazardous substances (RoHS) in electrical and electronic equipment and the applicable official amendment(s).

EU Regulation (EC) No. 1907/2006 on the registration, evaluation, authorization and restriction of chemicals (REACH) and the applicable official amendment(s).

EU Directive (2012/19/EU) on waste and electrical and electronic equipment (WEEE) and the applicable official amendment(s).

China Ministry of Information Industry (along with 7 other Government Agencies) Order No.32 (01/2016) on the control of pollution caused by electronic information products, hazardous substances concentration limits (GB/T 26572 - 2011), and the applicable product marking requirement (SJ/T 11364 - 2014).

Corporate offices

Christie Digital Systems USA, Inc.
Cypress
ph: 714 236 8610

Christie Digital Systems Canada Inc.
Kitchener
ph: 519 744 8005

Worldwide offices

Australia
ph: +61 (0) 7 3624 4888

Brazil
ph: +55 (11) 2548 4753

China (Beijing)
ph: +86 10 6561 0240

China (Shanghai)
ph: +86 21 6278 7708

France
ph: +33 (0) 1 41 21 44 04

Germany
ph: +49 2161 664540

India
ph: +91 (080) 6708 9999

Japan (Tokyo)
ph: 81 3 3599 7481

Korea (Seoul)
ph: +82 2 702 1601

Mexico
ph: +52 55 4744 1790

Republic of South Africa
ph: +27 (0)11 510 0094

Russian Federation
and Eastern Europe
ph: +36 (0) 1 47 48 100

Singapore
ph: +65 6877 8737

Spain
ph: +34 91 633 9990

United Arab Emirates
ph: +971 4 3206688

United Kingdom
ph: +44 (0) 118 977 8000

United States (Arizona)
ph: 602 943 5700

United States (New York)
ph: 646 779 2014

Independant sales consultant offices

Italy
ph: +39 (0) 2 9902 1161

For the most current technical documentation, visit www.christiedigital.com.