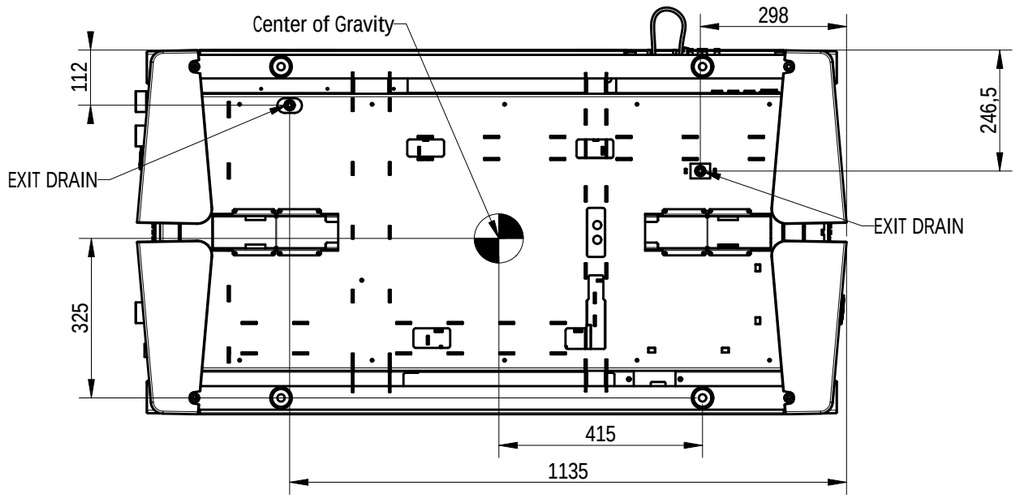

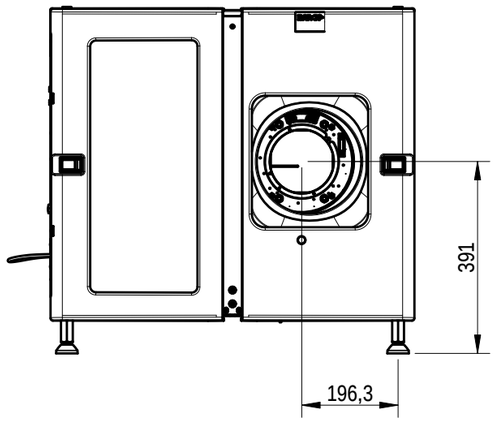

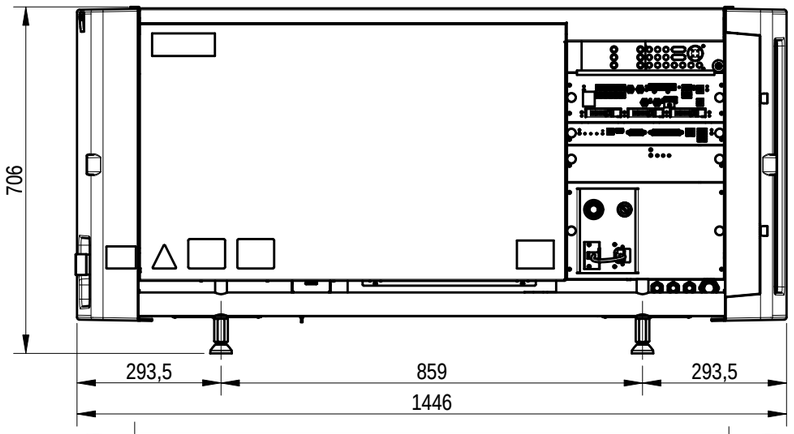

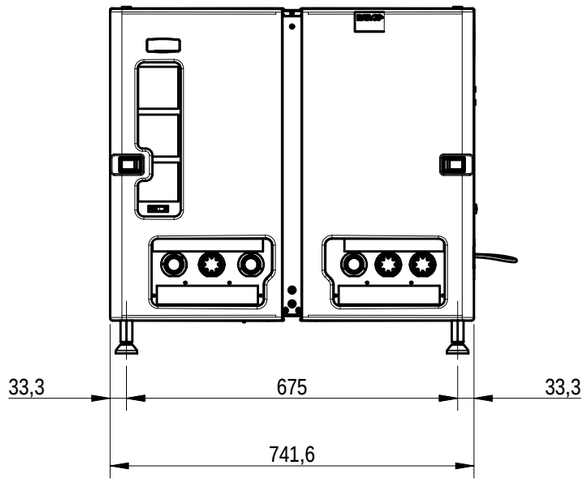

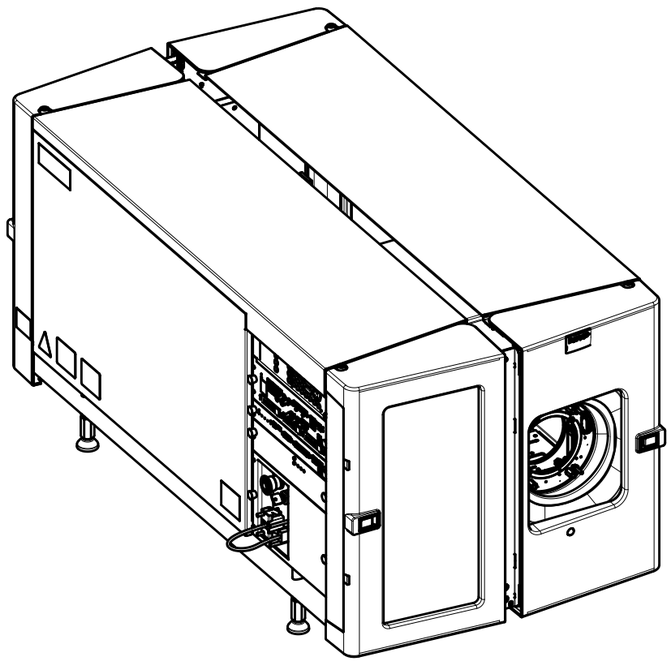

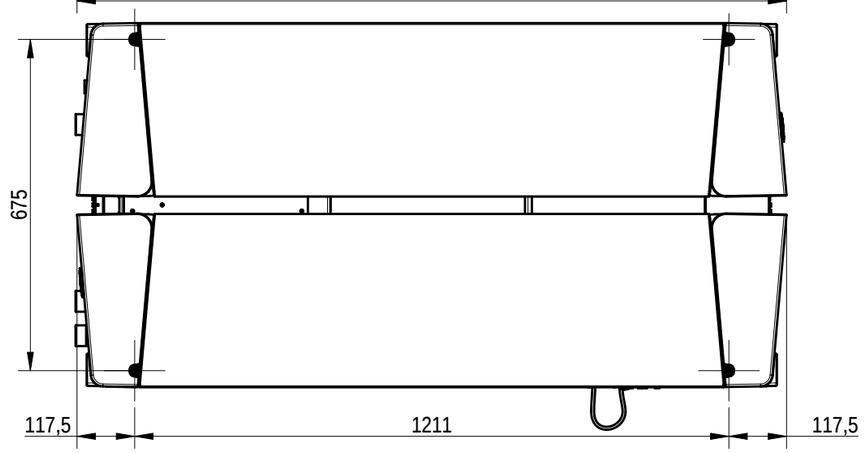

NAME	REV	ECN	DATE	DESCRIPTION MODIFICATION CURRENT REVISION

DESIGNER	FiPe	05/01/16	MATERIAL	
APPROVED			kg	

PROJ. 1ST ANG MM	2/25	A3	VISUAL APPEARANCE CLASS
	SCALE	SHEET 1 OF 2	BARCO QUALITY STANDARD QAM 001

ALL RIGHTS STRICTLY RESERVED. REPRODUCTION OR ISSUE TO THIRD PARTIES IN ANY FORM WHATEVER, IS NOT PERMITTED WITHOUT WRITTEN AUTHORITY FROM BARCO

This drawing shall be used in combination with the CAD file for full product definition
All undimensioned nominal geometry: see CAD file of same revision
In case of conflict, drawing dimensions overrule CAD dimensions
See additional info on the drawing for applicable CAD file GD&T references and tolerances

BARCO

BME DP4K-60L

R90065001

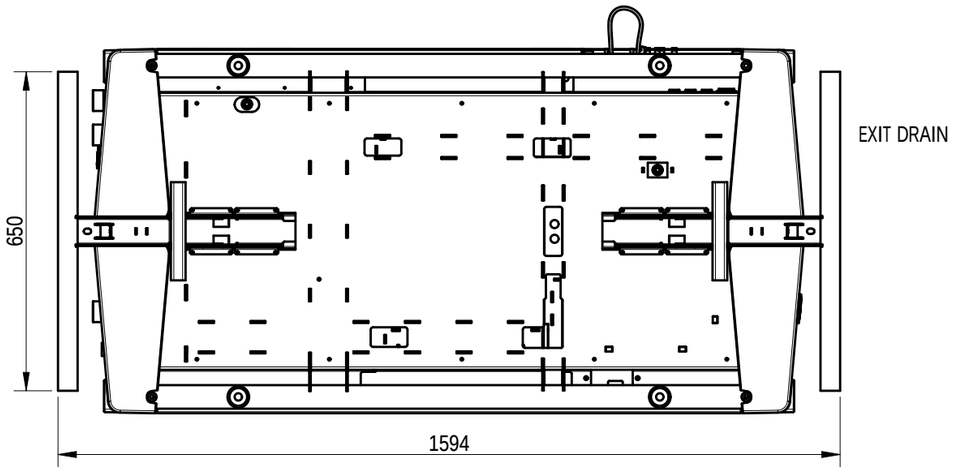

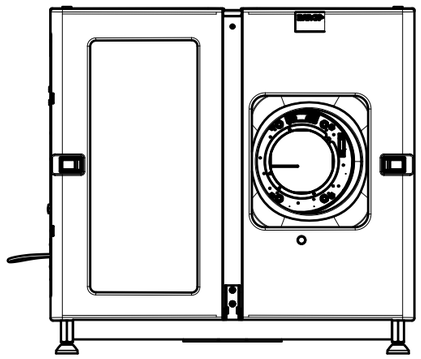

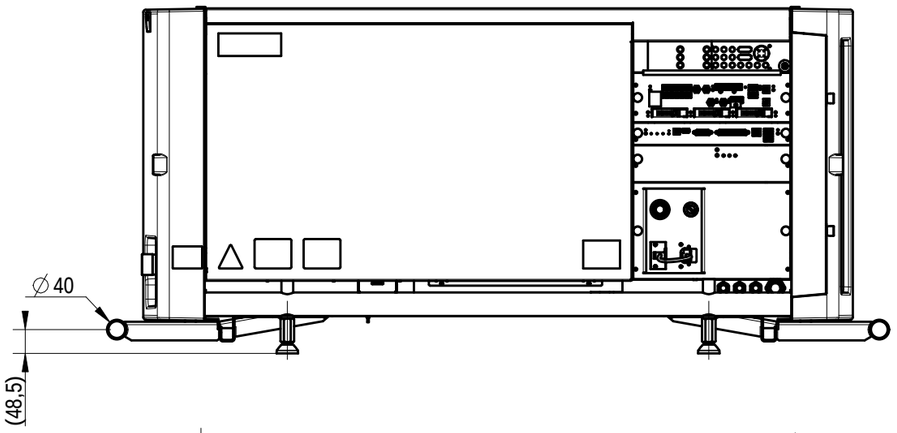

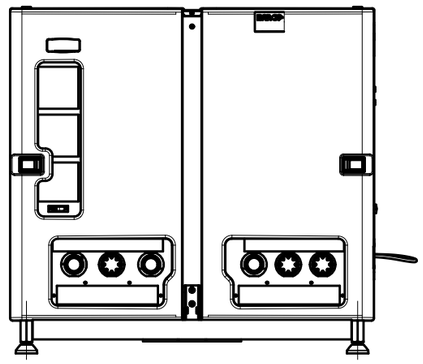

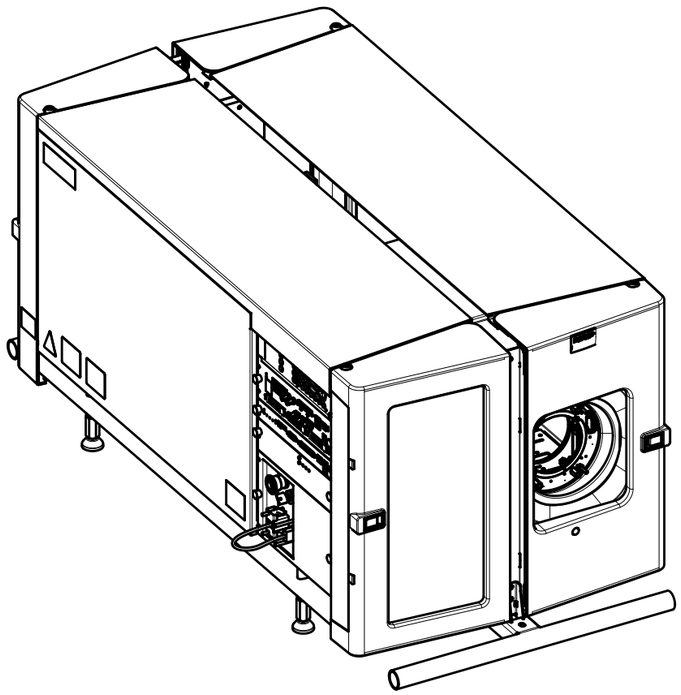

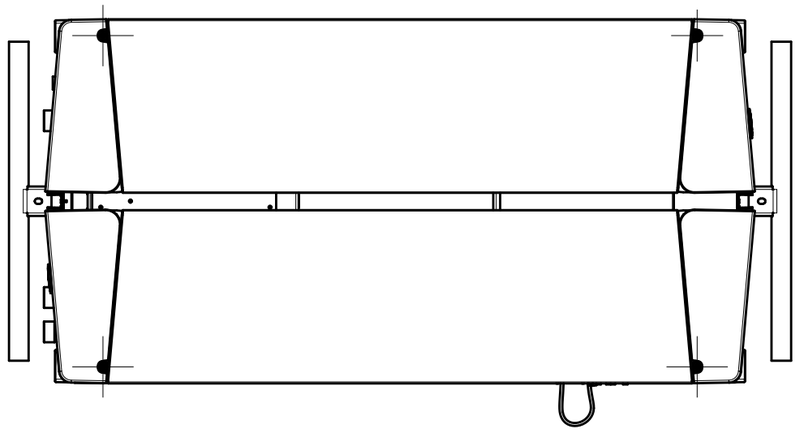

NAME	REV	ECN	DATE	DESCRIPTION MODIFICATION CURRENT REVISION

DESIGNER	FiPe	05/01/16	MATERIAL	
APPROVED			kg	

PROJ. 1ST ANG MM	2/25	A3	VISUAL APPEARANCE CLASS
	SCALE	SHEET 2 OF 2	BARCO QUALITY STANDARD QAM 001

ALL RIGHTS STRICTLY RESERVED. REPRODUCTION OR ISSUE TO THIRD PARTIES IN ANY FORM WHATEVER, IS NOT PERMITTED WITHOUT WRITTEN AUTHORITY FROM BARCO

This drawing shall be used in combination with the CAD file for full product definition
All undimensioned nominal geometry: see CAD file of same revision
In case of conflict, drawing dimensions overrule CAD dimensions
See additional info on the drawing for applicable CAD file GD&T references and tolerances

BARCO

BME DP4K-60L	R90065001	AA