NEC

MODEL NC2000C

DLP Cinema® Projector

SERVICE MANUAL

PART No. 3N9911160

Better Service

Better Reputation

Better Profit

SAFETY CAUTION:
Before servicing this chassis, it is important that the service technician read and follow the “Safety Precautions” and “Product Safety Notice” in this Service Manual.

WARNING:
SHOCK HAZARD - Use an isolation transformer when servicing.

NEC

NEC DISPLAY SOLUTIONS, LTD.

CONTENTS

CAUTION

RISK OF ELECTRIC SHOCK
DO NOT OPEN

CAUTION: TO REDUCE THE RISK OF ELECTRIC SHOCK, DO NOT REMOVE COVER. NO USER-SERVICEABLE PARTS INSIDE. REFER SERVICING TO QUALIFIED SERVICE PERSONNEL.

This symbol warns the user that uninsulated voltage within the unit may have sufficient magnitude to cause electric shock. Therefore, it is dangerous to make any kind of contact with any part inside of this unit.

This symbol alerts the user that important literature concerning the operation and maintenance of this unit has been included.
Therefore, it should be read carefully in order to avoid any problems.

ATTENTION

RISQUE D'ELECTROCUTION
NE PAS OUVRIR

MISE EN GARDE: AFIN DE REDUIRE LES RISQUES D' ELECTROCUTION, NE PAS DEPOSER LE COUVERCLE, IL N'Y A AUCUNE PIECE UTILISABLE A L'INTERIEUR DE CET APPAREIL. NE CONFIER LES TRAVAUX D'ENTRETIEN QU'A UN PERSONNEL QUALIFIE.

Ce symbole a pour but de prévenir l' utilisateur de la présence d' une tension dangereuse, non isolée se trouvant à l' intérieur de l' appareil. Elle est d' une intensité suffisante pour constituer un risque d' électrocution. Eviter le contact avec les pièces à l' intérieur de cet appareil.

Ce symbole a pour but de prévenir l' utilisateur de la présence d' importantes instructions concernant l' entretien et le fonctionnement de cet appareil. Par conséquent, elles doivent être lues attentivement afin d' éviter des problèmes.

WARNING

HEATSINK MAY BE ENERGIZED.
TEST BEFORE TOUCHING.
Heat sink located on the power board, is electrified.
⚠ mark is putted on the primary heat sink.
Pay attention to this area.

During servicing carefully observe the following.

1. OBSERVE ALL PRECAUTIONS
Items and locations that require special care during serv-icing, such as the cabinet, chassis, and parts are labelled with individual safety instructions. Carefully comply with these instructions and all precautions in the instruction manual.

2. BE CAREFUL OF ELECTRIC SHOCK
The chassis carries an AC voltage. If you touch the chassis while it is still alive, you will get a severe shock. If you think the chassis is alive, use an isolating transformer or gloves, or pull out the plug before replacing any parts.

3. USE SPECIFIED PARTS
The components have been chosen for minimum flammability and for specific levels of resistance value and withstand voltage. Replacement parts must match these original specifications. Parts whose specifications are particularly vital to safe use and maintenance of the set are marked ⚠ on the circuit diagrams and parts list.
Substitution of these parts can be dangerous for you and the customer, so use only specified parts.

4. REMOUNT ALL PARTS AND RECONNECT ALL WIRES AS ORIGINALLY INSTALLED
For safety, insulating tape and tubes are used throughout, but some lift-off parts on the printed wiring board require special attention.
All wires are positioned away from high-temperature and high-voltage parts, and, if removed for servicing, they must be retuned precisely to their original positions.

5. LAMP
Be very careful of the lamp because it generates high heat while it is used at high voltage. When replacing the bulb, make sure it is cool enough.

6. LENS
Do not look into the lens during projection. This important to avoid damage to the eyes.

7. SERVICING
At the time of repair or inspection services, use an earth band (wrist band), without fail.

8. RUN A COMPLETE SAFETY CHECK AT THE COMPLETION OF SERVICING
After completion of servicing, confirm that all screws, parts, and wiring, removed or disconnected for servicing, have been returned to their original positions. Also examine if the serviced sections and peripheral areas have suffered from any deterioration as a result of servicing. In addition, check insulation between external metallic parts and blades of wall-outlet plugs. This examination is indispensable in confirming complete establishment of safety.

(Insulation check)
Pull out a plug from a wall outlet to disconnect the connection cable. Then turn on the POWER switch. Use a 500V megger (Note 2) and confirm that the insulation resistance is 1MΩ or more between each terminal of the plug and exposed external metal (Note 1). If the measured value is below the specified level, then it is necessary to inspect and fix the set.

(Note 1)
Exposed external metal....RGB input terminals, control terminals, etc.
(Note 2)
If a 500V megger is not available for an unavoidable reason, then use a circuit tester or the like for inspection.

NEC

DLP Cinema® Projector

NC2000C/NC1200C

Installation Manual

NEC Display Solutions, Ltd.

Introduction

DLP Cinema Projector Installation and Adjustment NEC Display Solutions, Ltd. Manual (This document) describes the procedures to install, adjust and maintain the projector (NC2000C/NC1200C) and peripheral devices. For safe and correct installation, adjustment and use of the projector, carefully read this document before installation.

Refer to the operation manuals of the applicable products for basic operation and remarks of the projector. This document expects the readers who have basic knowledge about projector installation. After reading, please keep this document under care of the company which installed or adjusted the projector.

This manual is a common manual for NC2000C/NC1200C. When the content differs depending on the model, the model name is described in the text.

Important Information

Precautions: Please read this prior to setup to use your **NC2000C/NC1200C** safely. To use this projector safely, always observe the following precautions when setting up the projector. There is the possibility of serious accidents that can lead to death or serious injuries if the projector is handled improperly because these precautions were ignored. Handle this projector only after you completely understand these precautions.

- DLP, DLP Cinema and their respective logos are trademarks or registered trademarks of Texas Instruments.
- Microsoft and Windows are registered trademarks trademarks of Microsoft Corporation in the United States or other countries.
- Other product names and manufacturer names described in this manual are the registered trademarks or trademarks of their respective companies.
- The display screens and illustrations shown in this manual may differ slightly from the actual ones.

Important Safeguards

These safety instructions are to ensure the long life of your projector and to prevent fire and shock. Please read them carefully and heed all warnings.

⚠ **WARNING**
TO PREVENT FIRE, SHOCK, OR OTHER HAZARDS, DO NOT EXPOSE THIS UNIT TO RAIN OR MOISTURE.

⚠ **CAUTION**
TO REDUCE THE RISK OF ELECTRIC SHOCK, DO NOT OPEN COVER. NO USER SERVICEABLE PARTS INSIDE. REFER SERVICING TO QUALIFIED SERVICE PERSONNEL.

This symbol warns the user that uninsulated voltage within the unit may have sufficient magnitude to cause electric shock. Therefore, it is dangerous to make any kind of contact with any part inside of this unit.

This symbol alerts the user that important literature concerning the operation and maintenance of this unit has been included. Therefore, it should be read carefully in order to avoid any problems.

CAUTION

- In order to reduce any interference with radio and television reception use a signal cable with ferrite core attached.
  Use of signal cables without a ferrite core attached may cause interference with radio and television reception.
- This equipment has been tested and found to comply with the limits for a Class A digital device, pursuant to Part 15 of the FCC Rules. These limits are designed to provide reasonable protection against harmful interference when the equipment is operated in a commercial environment. This equipment generates, uses, and can radiate radio frequency energy and, if not installed and used in accordance with the installation manual, may cause harmful interference to radio communications.
  Operation of this equipment in a residential area is likely to cause harmful interference in which case the user will be required to correct the interference at his or her own expense.

WARNING

This is a Class A product. In a domestic environment this product may cause radio interference in which case the user may be required to take adequate measures.

DOC compliance Notice

This Class A digital apparatus meets all requirements of the Canadian Interference-Causing Equipment Regulations.

Machine Noise Information Regulation - 3. GPSGV,

The highest sound pressure level is less than 70 dB (A) in accordance with EN ISO 7779.

Disposing of your used product

EU-wide legislation as implemented in each Member State requires that used electrical and electronic products carrying the mark (left) must be disposed of separately from normal household waste. This includes projectors and their electrical accessories or lamps. When you dispose of such products, please follow the guidance of your local authority and/or ask the shop where you purchased the product. After collecting the used products, they are reused and recycled in a proper way. This effort will help us reduce the wastes as well as the negative impact to the human health and the environment at the minimum level. The mark on the electrical and electronic products only applies to the current European Union Member States.

WARNING

Always connect to a ground prior to connecting to the AC power supply.

- A very high, leaked current will flow to the projector. Therefore, always connect to a ground prior to connecting to the AC power supply.

Connect the projector to exhaust equipment.

- Use a duct, etc., to connect the NC1200C projector's air outlet to exhaust equipment that can handle flow amounts of at least 10 m^3/min. See the section about "Mounting Exhaust Equipment" in this manual to mount it correctly.
- Use a duct, etc., to connect the NC2000C projector's air outlet to exhaust equipment that can handle flow amounts of at least 13 m^3/min. See the section about "Mounting Exhaust Equipment" in this manual to mount it correctly.

Equipment Installation and Transport

- Be very careful not to allow the projector head to be shocked or excessively shaken when installing or transporting the projector. The internal components of the projector head can be damaged if they are excessively shocked or shaken.

When opening the lamp door

- There is a high voltage lamp inside the projector. There is the danger of cracking the lamp, so never open this door unless absolutely necessary. Also, when opening the lamp door, use the prescribed procedures to ensure that you do it safely.

Connecting the AC power supply

- Always connect the AC power supplied from the main AC power of the building to the projector via a breaker. Use a breaker with the following current capacity depending on the AC power supply connection method.

NC1200C
- For C1 connection
  (When the AC power to the projector power supply and the lamp power supply is provided by a single cable)
  - Maximum rating 20A
- For C2 connection
  (When the AC power to the projector power supply and the lamp power supply is provided by separate cables)
  Projector power supply
  - Maximum rating 10A
  Lamp power supply
  - Maximum rating 15A

NC2000C
- For C1 connection
  (When the AC power to the projector power supply and the lamp power supply is provided by a single cable)
  - Maximum rating 30A
- For C2 connection
  (When the AC power to the projector power supply and the lamp power supply is provided by separate cables)
  Projector power supply
  - Maximum rating 10A
  Lamp power supply
  - Maximum rating 30A

- Be sure that the cable used to connect the main unit with the AC power supply equipment of the building has a core thickness of 6 AWG, 8 AWG or 14 mm^2 according to the requirements of the country where the unit is installed, and that the cable core is made of copper.

- Use a round type UL-listed solderless terminal for the section connected to the main unit with the AC power supply, and that it is connected according to the procedures described in this manual.

Insert the handle holding pins when using the shipment handle

- Make sure that the handle holding pins are inserted when using the shipment handle. If the handle is used without inserting the handle holding pins, the handle may come off during shipment causing the unit to fall, and thereby lead to injury.

Use the shipment handle when moving the unit

- Be sure to attach the shipment handle (sold separately) to the projector and use it when moving the unit. Holding the lens or the anamorphic lens stand may damage the lens or lens bracket or may lead to dropping the unit, and thereby lead to injury.

Installation and transport

- Continual place the projector on a flat, level surface in a dry area away from dust and moisture. Tilting the front of the projector up or down could reduce lamp life. Do not put the projector on its side when the lamp is on. Doing so may cause damage to the projector.
- Do not place the projector in direct sunlight, near heaters or heat radiating appliances.
- Exposure to direct sunlight, smoke or steam could harm internal components.
- Handle your projector carefully. Dropping or jarring your projector could damage internal components.
- To carry the projector, a minimum of five persons are required.
  When moving the projector, always attach the shipment handle to the projector and carry the projector by holding the handle.
  Do not hold the lens part and the anamorphic lens part (or the wide converter lens part) with your hand. Otherwise the projector may tumble or drop, causing personal injury.
- Do not place heavy objects on top of the projector.

Power Supply

- The projector is so designed that it operates with the power supply voltage described below.

  NC1200C
  - For C1 connection
    (When the AC power to the projector power supply and the lamp power supply is provided by a single cable)
    - AC 200V – 240V single phase 50/60Hz
  - For C2 connection
    (When the AC power to the projector power supply and the lamp power supply is provided by separate cables)
    - AC 100V – 240V single phase 50/60Hz (projector power supply)
    - AC 200V – 240V single phase 50/60Hz (lamp power supply)

  NC2000C
  - For C1 connection
    (When the AC power to the projector power supply and the lamp power supply is provided by a single cable)
    - AC 200V – 240V single phase 50/60Hz
  - For C2 connection
    (When the AC power to the projector power supply and the lamp power supply is provided by separate cables)
    - AC 100V – 240V single phase 50/60Hz (projector power supply)
    - AC 200V – 240V single phase 50/60Hz (lamp power supply)

  Ensure that your power supply fits this requirement before attempting to use your projector.

- Handle the power cable carefully and avoid excessive bending. Do not place any heavy objects on the power cable. A damaged cable can cause electric shock or fire.
- If the projector will not be used for an extended period of time, shut down AC power.
  For C2 connection, turn off the projector, shut down the AC power to the projector and the lamp using a circuit breaker.

- Placing the power cable and the signal cable closely to each other can cause beat noise. Beat noise is corruption of the picture often seen as a rolling band moving through the image. Keep the two separated, to ensure beat noise is not generated.

Fire and Shock Precautions

- Prevent foreign objects such as paper clips and bits of paper from falling into your projector. Do not attempt to retrieve any objects that might fall into your projector. Do not insert any metal objects such as a wire or screwdriver into your projector. If something should fall into your projector, disconnect it immediately and have the object removed by a qualified service personnel.
  For C2 connection, turn off the projector, shut down the AC power to the projector and the lamp using a circuit breaker, and contact your dealer/distributor.
- Do not place any liquids on top of your projector. Refer servicing to qualified service personnel if liquid has been spilled.
- Keep any items such as magnifying glass out of the light path of the projector. The light being projected from the lens is extensive, therefore any kind of abnormal objects that can redirect light coming out of the lens, can cause unpredictable outcome such as fire or injury to the eyes.

CAUTION

- High Pressure Lamp May Explode if Improperly Handled.
- Do not look into the lens while the projector is on. Serious damage to your eyes could result.
- Do not touch the projector during a thunder storm. Doing so can cause electrical shock or fire.
- Do not cover the lens with the supplied lens cap or equivalent while the projector is on. Doing so can lead to distorting or melting of the cap and burning your hands due to the heat emitted from the light output.
- Ensure that there is sufficient ventilation and that vents are unobstructed to prevent potentially dangerous concentrations of ozone and the build-up of heat inside your projector. Allow at least 8 inches (20 cm) of space between your projector and a wall. Allow at least 20 inches (50 cm) of space in front of the ventilation outlet at the bottom rear of the projector.
- Connect the air outlet of the NC1200C projector to a ventilation facility with a flow volume greater than 10 m^3/min.
- Connect the air outlet of the NC2000C projector to a ventilation facility with a flow volume greater than 13 m^3/min.
- Do not handle the projector and the power cable with wet hands. Doing so can cause electrical shock or fire.
- Shut down AC power to the projector and disconnect all the cables before moving the projector to another place.
  For C2 connection, turn off the projector, shut down the AC power to the projector and the lamp using a circuit breaker. Disconnect the cables between devices and the lamp before moving the projector.
- Consult your dealer for installing the power cable to the projector. DO NOT install the power cable by yourself.
  Doing so may cause a fire or electric shock.
- To carry the projector, a minimum of five persons are required. Remove the lens and the lamp before carrying the projector. Do not apply a strong shock to the projector. Do not hold the lens part and the anamorphic lens part (or the wide converter lens part) with your hand. Otherwise the projector may tumble or drop, causing personal injury.
- If the projector will not be used for an extended period of time, shut down AC power.
  For C2 connection, turn off the projector, shut down the AC power to the projector and the lamp using a circuit breaker.
- Shut down AC power by using a circuit breaker before cleaning.
  For C2 connection, turn off the projector, shut down the AC power to the projector and the lamp using a circuit breaker.
- Do not try to touch the ventilation outlet as it can become heated while the projector is turned on. Doing so can lead to burning your hands due to the emitted heat.
- When main body is damaged, cooling fluids may come out of internal part. DO NOT touch and drink the cooling fluid. When the cooling fluids are swallowed or contacted with your eyes, please consult with doctors immediately.
- When using a LAN cable:
  For safety, do not connect to the connector for peripheral device wiring that might have excessive Voltage.

Handling the Battery

- Do not heat, take apart, or throw batteries into fire.
- Ensure that you have the batteries' polarity (+/-) aligned correctly.
- Dispose of used batteries according to your local regulations
- There is a battery mounted on the electronic circuit board within the main unit. When disposing of the main unit, do not dismantle the device or remove the internal circuit board, and contact the shop where you purchased the product or your local government agency.

Installation

- Do not put the projector on its side when the lamp is on. Doing so may cause damage to the projector.
- Controlled ambient light environments will allow for an image of higher contrast and depth to be displayed.
- Screens with a soiled, scratched, or discolored area will not produce a clean image. Care should be used in the handling of the screen.
- To carry the projector, a minimum of five persons are required.
- Keep finger prints or dust off the lens surface. Leaving finger prints or dust can cause unwanted shadows on the screen. Cover the lens with the supplied lens cap if the projector is not to be used for an extended period of time.

Lamp Caution: Please read before operation

- Due to the lamp being sealed in a pressurized environment, there is a small risk of explosion, if not operated correctly. There is minimal risk involved, if the unit is in proper working order, but if damaged or operated beyond the recommended hours, the risk of explosion increases. Please note that there is a warning system built in, that displays following message when you reach a preset operating time "Bulb Over Time". When you see this message please contact your dealer for a replacement. If the lamp does explode, smoke will be discharged from the vents located on the back of the unit. Do not stand in front of the vents during the operation. This smoke is comprised of glass in particulate form and Xenon gas, and will not cause harm if kept out of your eyes. If your eyes have been exposed to this gas, please flush your eyes out with water immediately and seek immediate medical attention. Do not rub your eyes! This could cause serious injury.
- Do not shut down AC power to the projector under the following conditions. Doing so can damage the projector:
  - While projecting images
  - While cooling after the lamp has been turned off. (The POWER button LED blinks in white while the fan is rotating, and "Cooling..." is displayed on the LCD screen. The cooling fan continues to work for 5 minutes.)

For questions relating to unclear points or repairs

Contact your dealer or the following support branch for questions relating to unclear points, malfunctions and repairs of the product.

In Europe

NEC Europe, Ltd. / European Technical Centre
Address: Unit G, Stafford Park 12, Telford TF3 3BJ, U.K.
Telephone: +44 1952 237000
Fax Line: +44 1952 237006

Wichtige Informationen

Vorsichtsmaßnahmen: Bitte lesen Sie zum sicheren Gebrauch Ihres **NC2000C/NC1200C** diese Anweisungen vor dem Einrichten durch. Befolgen Sie zum sicheren Gebrauch dieses Projektors immer die folgenden Sicherheitsmaßnahmen beim Einrichten des Projektors. Bei unsachgemäßer Handhabung des Projektors aufgrund Nichtbefolgung dieser Vorsichtsmaßnahmen besteht die Möglichkeit schwerer Unfälle, die zum Tod oder zu schwerwiegenden Verletzungen führen können. Verwenden Sie diesen Projektor erst, wenn Sie diese Vorsichtsmaßnahmen vollkommen verstanden haben.
Dieses Handbuch gilt für NC2000C und NC1200C. Wenn der Inhalt je nach Modell unterschiedlich ist, werden die Modellnamen im Text angegeben.

- DLP, DLP Cinema und die entsprechenden Logos sind Warenzeichen oder registrierte Warenzeichen von Texas Instruments.
- Microsoft und Windows sind eingetragene Warenzeichen von Microsoft Corporation in den USA oder anderen Länden.
- Andere in diesem Handbuch genannte Produkt- und Herstellernahmen sind eingetragene Warenzeichen oder Warenzeichen der entsprechenden Unternehmen.
- Die Bildschirmanzeigen und Abbildungen in diesen Handbuch können leicht von den tatsächlichen Anzeigen abweichen.

Wichtige Sicherheitshinweise

Diese Sicherheitshinweise sollen eine lange Lebensdauer Ihres Projektors sicherstellen und vor Feuer und elektrischen Schlägen schützen. Lesen Sie diese Hinweise sorgfältig durch und beachten Sie alle Warnungen.

⚠ WARNUNG

ZUR VERMEIDUNG VON FEUER UND ELEKTRISCHEN SCHLÄGEN DARF DAS GERÄT WEDER REGEN NOCH FEUCHTIGKEIT AUSGESETZT WERDEN.

⚠ ACHTUNG

ZUR VERMEIDUNG EINES ELEKTRISCHEN SCHLAGES ÖFFNEN SIE NICHT DAS GEHÄUSE. INNERHALB DES GEHÄUSES BEFINDEN SICH KEINE FÜR DIE BEDIENUNG DES GERÄTES ERFORDERLICHEN TEILE. LASSEN SIE DEN KUNDENDIENST NUR VON HIERFÜR QUALIFIZIERTEN PERSONEN DURCHFÜHREN.

Dieses symbol warnt den bediener, dass innerhalb des gerätes unisolierte teile vorhanden sind, die hochspannung führen und deren berührung einen elektrischen schlag verursachen kann.

Dieses symbol macht den bëdiener darauf aufmerksam, dass wichtige, den betrieb und die wartung des gerätes betreffende schriften beigefügt sind. um irgendwelche probleme zu vermeiden, sollten diese beschreibungen sorgfältig gelesen werden.

Maschinenlärminformations-Verordnung – 3. GPSGV,

Der höchste Schalldruckpegel beträgt 70 dB (A) oder weniger gemäß EN ISO 7779.

Entsorgung Ihres benutzten Gerätes

Die EU-weite Gesetzgebung, wie sie in jedem einzelnen Mitgliedstaat gilt, bestimmt, dass benutzte elektrische und elektronische Geräte mit dieser Markierung (links) getrennt vom normalen Haushaltsabfall entsorgt werden müssen.
Dies schließt Projektoren und deren elektrisches Zubehör oder ihre Lampen mit ein.
Folgen Sie beim Entsorgen eines solchen Gerätes bitte den Anweisungen Ihrer örtliche Behörde und/oder konsultieren Sie den Händler, bei dem Sie das Gerät erworben haben.
Nach der Sammlung benutzter Geräte werden diese erneut verwendet und entsprechend den Umweltbestimmungen recycelt. Das trägt dazu bei, die Abfallmenge zu reduzieren sowie die negativen Auswirkungen auf die menschliche Gesundheit und die Umwelt möglichst gering zu halten.
Die Markierung auf elektrischen und elektronischen Geräten gilt nur für die gegenwärtigen Mitgliedsstaaten der Europäischen Union.

WARNUNG

Sehen Sie nicht direkt in den leuchtintensiven Lichtstrahl.

- Die in diesem Produkt befindliche Lampe ist eine intensive Licht- und Hitzequelle. Ultraviolettes Licht ist ein Bestandteil des von der Lampe abgestrahlten Lichts. Die Aufstellung und Inbetriebnahme dieses Produkts darf ausschliesslich durch lizensierte Fachkräfte oder geschulte Benutzer erfolgen, die ausreichend über die möglichen Gefahren unterrichtet sind, die von der in diesem Gerät entstehenden Ultraviolett-Strahlung ausgehen können.

Gerät vor dem Anschließen an die Wechselstromversorgung immer erden.

- Zum Projektor fließt ein sehr hoher Kriechstrom. Erden Sie den Projektor daher stets vor dem Anschließen an die Wechselstromversorgung.

Projektor an Entlüftungsanlage anschließen.

- Verwenden Sie einen Abluftschlauch o. Ä., um den Luftauslass des Projektors NC1200C an eine Entlüftungsanlage anzuschließen, die eine Durchflussmenge von mindestens 10 m^3/min bewältigt. Informationen zur korrekten Montage finden Sie im Abschnitt "Montage der Entlüftungsanlage" in diesem Handbuch.
- Verwenden Sie einen Abluftschlauch o. Ä., um den Luftauslass des Projektors NC2000C an eine Entlüftungsanlage anzuschließen, die eine Durchflussmenge von mindestens 13 m^3/min bewältigt. Informationen zur korrekten Montage finden Sie im Abschnitt "Montage der Entlüftungsanlage" in diesem Handbuch.

Installation und Transport des Projektors

- Achten Sie sorgfältig darauf, dass bei der Installation und beim Transport des Projektors Erschütterungen oder übermäßiges Schütteln des Projektorkopfes vermieden werden. Die internen Komponenten des Projektorkopfes können durch übermäßige Erschütterungen oder starkes Schütteln beschädigt werden.

Öffnen der Lampentür

- Im Projektorinneren befindet sich eine Hochspannungslampe. Es besteht die Gefahr, dass die Lampe zerbricht. Öffnen Sie diese Tür daher nur im äußersten Notfall. Befolgen Sie zum sicheren Öffnen der Lampentür unbedingt die vorgeschriebenen Anweisungen.

Anschließen an die Wechselstromversorgung

- Schließen Sie den Projektor immer über eine Sicherung an die Stromzufuhr der Wechselstrom-Hauptversorgung des Gebäudes an. Verwenden Sie abhängig von der Anschlussmethode an die Wechselstromversorgung eine Sicherung für die folgende maximale Stromstärke.

  NC1200C
  - Für Anschluss C1
    (Wenn die Netzspannung zur Spannungsversorgung des Projektors und der Lampe über ein einzelnes Kabel zugeführt wird)
    - Maximalkennwert 20 A
  - Für Anschluss C2
    (Wenn die Netzspannung zur Spannungsversorgung des Projektors und der Lampe über getrennte Kabel zugeführt wird)
    Spannungsversorgung des Projektors
    - Maximalkennwert 10 A
    Spannungsversorgung der Lampe
    - Maximalkennwert 15 A

  NC2000C
  - Für Anschluss C1
    (Wenn die Netzspannung zur Spannungsversorgung des Projektors und der Lampe über ein einzelnes Kabel zugeführt wird)
    - Maximalkennwert 30 A
  - Für Anschluss C2
    (Wenn die Netzspannung zur Spannungsversorgung des Projektors und der Lampe über getrennte Kabel zugeführt wird)
    Spannungsversorgung des Projektors
    - Maximalkennwert 10 A
    Spannungsversorgung der Lampe
    - Maximalkennwert 30 A

- Stellen Sie sicher, dass das Kabel zum Anschließen der Haupteinheit an die Wechselstromversorgung des Gebäudes einen Leiterquerschnitt von AWG 6, AWG 8 oder 14 mm^2 aufweist (je nach den Vorgaben des Landes, in dem die Haupteinheit installiert wird) und dass die Kabelader aus Kupfer besteht.
- Verwenden Sie eine runde lötfreie Anschlussklemme mit dem UL Listing-Prüfzeichen für den Kabelabschnitt, der an die Haupteinheit angeschlossen wird, und stellen Sie sicher, dass die Klemme entsprechend den Anweisungen in diesem Handbuch angeschlossen wird.

Einsetzen der Griffhaltestifte bei Verwendung des Transportgriffs

- Stellen Sie sicher, dass bei Verwendung des Transportgriffs die Griffhaltestifte eingesetzt sind. Wenn der Transportgriff verwendet wird, ohne dass die Griffhaltestifte eingesetzt sind, kann sich der Griff beim Transport lösen. Dies kann das Herunterfallen des Geräts verursachen und dadurch zu Verletzungen führen.

Verwenden des Transportgriffs beim Umstellen des Projektors

- Bringen Sie beim Umstellen des Projektors auf jeden Fall den Transportgriff (separat erhältlich) am Projektor an. Beim Hochheben des Projektors an der Linse oder am Sockel der Verzerrungslinse kann die Linse oder die Linsenhalterung beschädigt werden oder der Projektor herunterfallen und Verletzungen verursachen.

Installation und Transport

- Stellen Sie den Projektor immer auf einem flachen und ebenen Untergrund an einem trockenen Ort ohne Staub und Feuchtigkeit auf. Durch Kippen der Vorderseite des Projektors nach oben oder unten kann sich die Lebensdauer der Lampe verkürzen. Legen Sie den Projektor bei eingeschalteter Lampe nicht auf die Seite. Er könnte dadurch beschädigt werden.
- Stellen Sie den Projektor nicht in Bereichen mit direkter Sonneneinstrahlung, in der Nähe von Heizkörpern oder anderen Wärmequellen auf.
- Direktes Sonnenlicht, Rauch oder Dampf kann die inneren Bauteile beschädigen.
- Behandeln Sie Ihren Projektor vorsichtig. Fallenlassen oder starkes Schutteln kann interne Komponenten beschädigen.
- Zum Tragen des Projektors werden mindestens fünf Personen benötigt.
  Bringen Sie beim Umstellen des Projektors immer den Tragegriff am Projektor an, und tragen Sie ihn am Tragegriff.
  Den Projektor nicht am Linsenbereich oder an der anamorphotischen Linsenwelle (oder an der Weitwinkelkonverterlinse) tragen.
  Anderenfalls kann der Projektor umkippen oder herunterfallen und Verletzungen verursachen.

- Stellen Sie keine schweren Gegenstände auf den Projektor.

Stromversorgung

- Der Projektor ist für den Betrieb mit der im Folgenden beschriebenen Netzspannung ausgelegt.

NC1200C
- Für Anschluss C1
  (Wenn die Netzspannung zur Spannungsversorgung des Projektors und der Lampe über ein einzelnes Kabel zugeführt wird)
  - AC 200 V-240 V einphasig 50/60 Hz
- Für Anschluss C2
  (Wenn die Netzspannung zur Spannungsversorgung des Projektors und der Lampe über getrennte Kabel zugeführt wird)
  - AC 100 V-240 V einphasig 50/60 Hz (Spannungsversorgung zum Projektor)
  - AC 200 V-240 V einphasig 50/60 Hz (Spannungsversorgung zur Lampe)

NC2000C
- Für Anschluss C1
  (Wenn die Netzspannung zur Spannungsversorgung des Projektors und der Lampe über ein einzelnes Kabel zugeführt wird)
  - AC 200 V-240 V einphasig 50/60 Hz
- Für Anschluss C2
  (Wenn die Netzspannung zur Spannungsversorgung des Projektors und der Lampe über getrennte Kabel zugeführt wird)
  - AC 100 V-240 V einphasig 50/60 Hz (Spannungsversorgung zum Projektor)
  - AC 200 V-240 V einphasig 50/60 Hz (Spannungsversorgung zur Lampe)

Stellen Sie sicher, dass die vorhandene Spannungsversorgung diesen Vorgaben entspricht, bevor Sie versuchen, Ihren Projektor zu betreiben.

- Gehen Sie mit dem Netzkabel vorsichtig um, und biegen Sie es nicht übermäßig. Stellen Sie keine schweren Gegenstände auf das Netzkabel.Gehen Sie mit dem Netzkabel vorsichtig um. Ein beschädigtes oder ausgefranstes Netzkabel kann einen elektrischen Schlag oder Feuer verursachen.
- Wenn der Projektor über eine längere Zeit nicht genutzt wird, schalten Sie die Stromversorgung ab.
  Für Anschluss C2 schalten Sie den Projektor aus, und trennen Sie die Netzspannung zur Spannungsversorgung des Projektors und der Lampe mithilfe eines Ausschalters.
- Durch zu dichtes Verlegen des Netzkabels und des Signalkabels nebeneinander können Störsignale verursacht werden. Störsignale sind Störungen im Bild, die sich häufig als durch das Bild rollender Bereich bemerkbar machen. Verlegen Sie die beiden Kabel voneinander getrennt, um Störsignale zu vermeiden.

Vorsichtsmaßnahmen gegen Brand und elektrische Schläge

- Vermeiden Sie, dass Fremdgegenstande wie Büroklammern und Papierschnipsel in den Projektor fallen. Versuchen Sie nicht, in den Projektor gefallene Gegenstände selbst zu entfernen. Stecken Sie keine Metallgegenstände wie einen Draht oder Schraubendreher in Ihren Projektor. Wenn etwas in den Projektor gefallen ist, müssen Sie sofort den Netzstecker ziehen und den Gegenstand von qualifiziertem Servicepersonal entfernen lassen.
  Für Anschluss C2 schalten Sie den Projektor aus, trennen Sie die Netzspannung zur Spannungsversorgung des Projektors und der Lampe mithilfe eines Ausschalters und wenden Sie sich an Ihren Händler/Lieferanten.
- Stellen Sie keine mit Flüssigkeit gefüllten Gefäße auf Ihren Projektor. Überlassen Sie die Reparatur ausschließlich qualifiziertem Servicepersonal, wenn Flüssigkeit verschüttet worden ist.
- Halten Sie optische Geräte wie z. B. ein Vergrößerungsglas vom Lichtkegel des Projektors fern. Das von der Linse projizierte Licht ist sehr lichtstark, sodass Gegenstände, durch die der Lichtstrahl aus der Linse umgeleitet wird, unvorhersehbare Ereignisse (z. B. einen Brand oder Augenverletzungen) verursachen können.

ACHTUNG

- Bei unsachgemäßer Handhabung kann die Hochdrucklampe explodieren.
- Schauen Sie nicht in die Linse, wenn der Projektor eingeschaltet ist. Dies könnte schwere Augenverletzungen zur Folge haben.
- Berühren Sie den Projektor auf keinen Fall während eines Gewitters. Wenn Sie dies nicht beachten, kann dies zu einem elektrischen Schlag oder einem Feuer führen.
- Bedecken Sie die Linse nicht mit der mitgelieferten Linsenkape o.ä. wärend der Projektor eingeschaltet ist. Dies kann eine Verformung oder ein Schmelzen der Kappe verursachen. Darüber hinaus würden Sie sich aufgrund der vom Lichtausgang abgestrahlten Hitze wahrscheinlich die Hände verbrennen.
- Sorgen Sie für ausreichende Belüuftung und stellen Sie außerdem sicher, dass die Lüftungsschlitze frei bleiben, damit sich innerhalb des Projektors kein Hitzestau bilden kann.
  Lassen Sie mindestens 20 cm Abstand zwischen Ihrem Projektor und der Wand. Halten Sie einen Abstand von mindestens 50 cm vor dem Luftauslass unten an der Rückseite des Projektors ein.
- Schließen Sie den Luftauslass des Projektors NC1200C an einen Lüfter mit einer Durchflussmenge von mehr als 10 m^3/ min an.
- Schließen Sie den Luftauslass des Projektors NC2000C an einen Lüfter mit einer Durchflussmenge von mehr als 13 m^3/ min an.
- Fassen Sie den Projektor und das Netzkabel nicht mit nassen Händen an. Wenn Sie dies nicht beachten, kann dies zu einem elektrischen Schlag oder einem Feuer führen.
- Schalten Sie die Stromversorgung des Projektors aus und trennen Sie sämtliche Kabel ab, bevor Sie den Projektor an einen anderen Ort stellen.
  Für Anschluss C2 schalten Sie den Projektor aus, und trennen Sie die Netzspannung zur Spannungsversorgung des Projektors und der Lampe mithilfe eines Ausschalters. Trennen Sie die Kabel zwischen Geräten und der Lampe, bevor Sie den Projektor bewegen.
- Zum Installieren des Netzkabels am Projektor wenden Sie sich bitte an Ihren Fachhändler. UNTER KEINEN UMSTÄNDEN versuchen, das Netzkabel selbst zu installieren. Brand- und Schlaggefahr.
- Zum Tragen des Projektors werden mindestens fünf Personen benötigt. Entfernen Sie vor dem Tragen des Projektors sowohl die Linse als auch die Lampe. Setzen Sie den Projektor keinen starken Erschütterungen aus. Den Projektor nicht am Linsenbereich oder an der anamorphotischen Linsenwelle (oder an der Weitwinkelkonverterlinse) tragen.
  Anderenfalls kann der Projektor umkippen oder herunterfallen und Verletzungen verursachen.
- Wenn der Projektor über eine längere Zeit nicht genutzt wird, schalten Sie die Stromversorgung ab.
  Für Anschluss C2 schalten Sie den Projektor aus, und trennen Sie die Netzspannung zur Spannungsversorgung des Projektors und der Lampe mithilfe eines Ausschalters.
- Schalten Sie vor der Reinigung die Stromversorgung durch Herausdrehen der Sicherung ab.
  Für Anschluss C2 schalten Sie den Projektor aus und trennen Sie die Netzspannung zur Spannungsversorgung des Projektors und der Lampe mithilfe eines Ausschalters.
- Versuchen Sie nicht den Lüftungsauslass da dieser bei eingeschaltetem sehr heiß werden kann. Dies kann aufgrund der abgestrahlten Wärme zu Verbrennungen der Hände führen.
- Wenn das Hauptteil beschädigt ist, kann Kühlungsflüssigkeit aus dem Inneren austreten. Berühren Sie die Flüssigkeit NICHT, und trinken Sie sie NICHT.
  Wenn die Kühlungsflüssigkeit geschluckt wurde oder in Augenkontakt kam, rufen Sie bitte sofort einen Arzt.
- Wenn ein LAN-Kabel verwendet wird:
  Schließen Sie es aus Sicherheitsgründen nicht an den Anschluss der Peripheriegeräte-Verbindung an, das sie eine zu hohe Spannung führen könnte.

Umgang mit der Batterie

- Erhitzen Sie Batterien nicht, zerlegen Sie sie nicht, und werfen Sie sie nicht ins Feuer.
- Stellen Sie sicher, dass Sie die Batterie mit der richtigen Polung (+/-) eingelegt haben.
- Entsorgen Sie verbrauchte Batterien entsprechend den in Ihrem Land geltenden Bestimmungen.

- Auf der Leiterplatte der Haupteinheit ist eine Batterie montiert. Zerlegen Sie die Haupteinheit beim Entsorgen nicht, und entfernen Sie nicht die interne Leiterplatte. Wenden Sie sich stattdessen an den Händler, bei dem Sie das Gerät erworben haben, oder an die zuständige Behörde.

Installation

- Den Projektor bei eingeschalteter Lampe nicht auf die Seite legen. Dies könnte den Projektor beschädigen.
- Kontrollierte Lichtumgebungen ermöglichen bei anzuzeigenden Bildern höheren Kontrast und Tiefe.
- Bildschirme mit verschmutzten, verkratzten oder verfärbten Stellen ergeben kein sauberes Bild. Vorsicht bei der Handhabung des Bildschirms.
- Zum Tragen des Projektors werden mindestens fünf Personen benötigt.
- Schützen Sie die Linse vor Fingerabdrücken und Staub. Fingerabdrücke oder Staub können unerwünschte Schatten auf der Leinwand verursachen.
  Bedecken Sie die Linse mit dem mitgelieferten Linsenverschluss, wenn der Projektor für einen längeren Zeitraum nicht benutzt wird.

Vorsichtsmaßnahmen bezüglich der Lampe: Bitte vor dem Betrieb durchlesen

- Aufgrund der unter Druck luftdicht verschlossenen Lampe besteht bei falscher Handhabung eine geringe Explosionsgefahr.
  Wenn sich das Gerät in einwandfreiem Zustand befindet, ist dieses Risiko minimal; die Explosionsgefahr erhöht sich jedoch im Falle einer Beschädigung oder bei einer Benutzung über die empfohlenen Betriebsstunden hinaus. Beachten Sie bitte, dass im Gerät ein Warnsystem integriert ist, das bei Erreichen der voreingestellten Betriebsdauer die nachfolgende Meldung anzeigt: "Bulb Over Time".
  Im Falle einer Lampenexplosion tritt aus den Lüftungsschlitzen der Rückseite des Gerätes Rauch aus.
  Stehen Sie nicht vor den Entlüftungsöffnungen während des Betriebes. Dieser Rauch besteht aus einer ganz besonderen Form von Glas und aus Xenon-Gas. Solange dieser Rauch nicht in die Augen gelangt, bestehen keinerlei gesundheitliche Risiken. Wenn Ihre Augen dem Gas ausgesetzt worden sind, spülen Sie die Augen bitte sofort mit Wasser aus und konsultieren Sie einen Arzt. Reiben Sie die Augen nicht! Dies könnte ernsthafte Verletzungen zur Folge haben.
- Schalten Sie unter den folgenden Bedingungen die Stromversorgung des Projektors nicht ab. Anderenfalls kann der Projektor beschädigt werden.
  - Während der Projizierung von Bildern
  - Während des Abkühlens, nachdem die Lampe ausgeschaltet worden ist. (Die POWER-Anzeige blinkt weiß, während das Gebläse in Betrieb ist, und auf der LCD-Anzeige wird "cooling..." angezeigt. Das abkühlende fan fährt fort, für 5 Minuten zu arbeiten.)

Bei Fragen, die sich aus unklaren Punkten oder Reparaturarbeiten ergeben

Bei Fragen, die sich aus unklaren Punkten, Fehlfunktionen oder Reparaturarbeiten am Produkt ergeben, wenden Sie sich an Ihren Händler oder an die folgende Niederlassung.

In Europa

NEC Europe, Ltd. / European Technical Centre
Addresse: Unit G, Stafford Park 12,
Telford TF3 3BJ, U.K.
Telefon: +44 1952 237000
Fax-Nummer: +44 1952 237006

Table of Contents

3. Projector Adjustment and Connecting 82

4. LCD Menu 108

5. Appendix 129

1.

Before Setting Up Your Projector

1.1 What's in the Box?

Check the content of the accessories.

- NC2000C/NC1200C projector

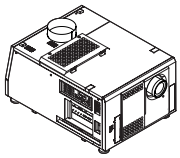

- Exhaust outlet protective sheet

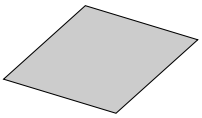

- Exhaust outlet protective sheet fastening band x4

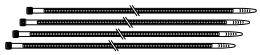

- CD-ROM (User's Manual)

- Important Information

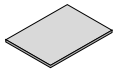

- Attachment for lamp x1

- Small iris x1

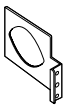

- Cover key x2

* Give to the serviceman after use.

- Lamp door key x2

* Give to the serviceman.

- Retainer for lamp power AC power cable x1

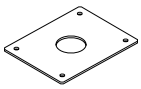

- Sheet of title labels (for 20 labels) x 2

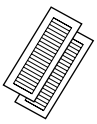

The tools used for NC2000C/NC1200C installation are as follows:
In addition to the following, the cover key and the lamp door key are required in order to remove the covers.

Item	Tool	Quantity	Major Application
Projector (NC2000C/ NC1200C)	Phillips head screwdriver (No.2)	1	Outer panel, Covers
	Hexagonal wrench (Width across flats: 5 mm)	1	Lamp Bulb
	Spanner (Width across flats: 19 mm)	1	Level adjuster
Anamorphic motor-operated turret 02 (NC-AT02)	Phillips head screwdriver (No. 2)	1	-
	Hexagonal wrench (Width across flats: 5 mm)	1	Front bracket, Lens holder
	Hexagonal wrench (Width across flats: 6 mm)	1	Shaft L/R
	Spanner (Width across flats: 10 mm)	1	Adjust stopper bolt

1.2 Exhaust equipment specifications

It is necessary to connect the air outlet of the projector to the exhaust equipment. The accessory protective sheet should also be mounted because the area around the air outlet can become very hot. For Exhaust equipment Installation, see “2.8. Mounting the exhaust equipment” (Page 78).

NC1200C

Exhaust	10m^3/min. or more
Air outlet size (external diameter)	about 200 mm

NC2000C

Exhaust	13m^3/min. or more
Air outlet size (external diameter)	about 200 mm

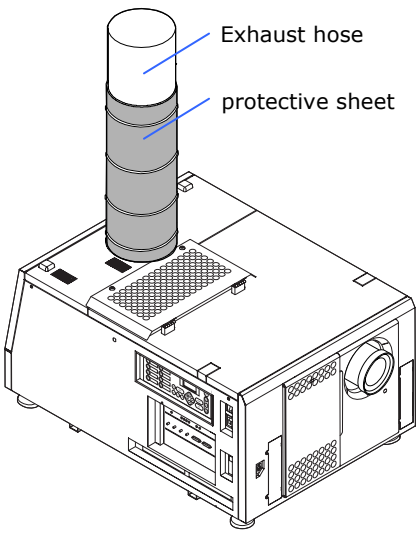

1.3 Selecting Primary/Anamorphic Lenses for Your Projector

This section provides guideline information on how to select a screen size and projector mounting position appropriate for your presentation purposes and about selection of types of lenses as well. Select primary/anamorphic lenses for your projector according to the environment in which it is installed. If you are using the wide converter lens, please read anamorphic lens as wide converter lens.

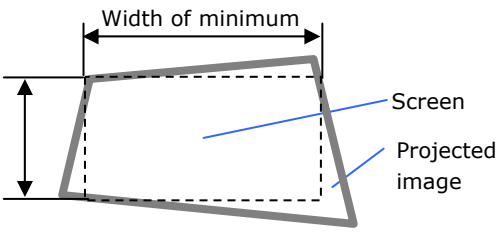

Note that all descriptions given in this manual assume that the angle of projection is zero degree. In case of projection from an upper position or from the right or left, it is necessary to calculate the width for the minimum projected image that is a little larger than the screen size.

1.3.1 Screen Type

The following two types of screen masks can be used for the DLP Cinema Projector. Check the screen mask for your projector for its type before selecting lenses because types of primary/anamorphic lenses to be used on the projector and its settings depend upon the type of screen mask you use.

Horizontal moving screen mask

Screen masks move horizontally to adjust the screen.

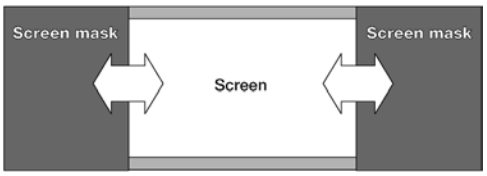

Vertical moving screen mask

Screen masks move vertically to adjust the screen.

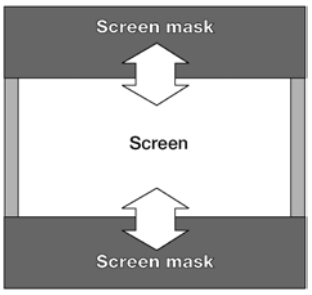

1.3.2 Selection of Anamorphic Lens/Wide Converter Lens

An anamorphic lens or a wide converter lens is required when you use a wide screen for projection. Because a different type of anamorphic lens/wide converter lens should be used according to the type of projector and screen, determine an appropriate anamorphic lens in consultation with the end user, considering its application purpose. See the table below for available anamorphic lenses/wide converter lenses.

Available Anamorphic Lenses/Wide Converter Lenses

Screen mask type	Screen Type	Projected area	Anamorphic lens/Wide converter lens
Horizontal moving	SCOPE	2048 x 1080	x1.25
	VISTA (FLAT)	1998 x 1080	-
	HDTV	1920 x 1080	-
Vertical moving	SCOPE	2048 x 1080	x1.25 or None
	VISTA (FLAT)	1998 x 1080	-
	HDTV	1920 x 1080	-

Projected Images

The anamorphic lens/wide converter lens works to magnify projected images horizontally when you use a wide screen for projection (SCOPE).

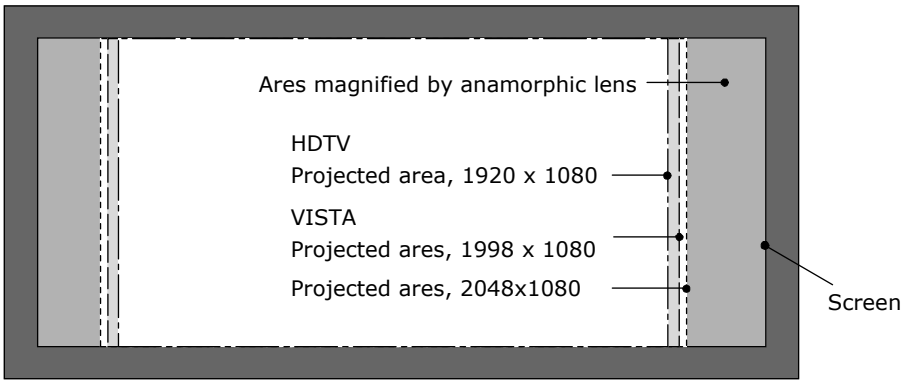

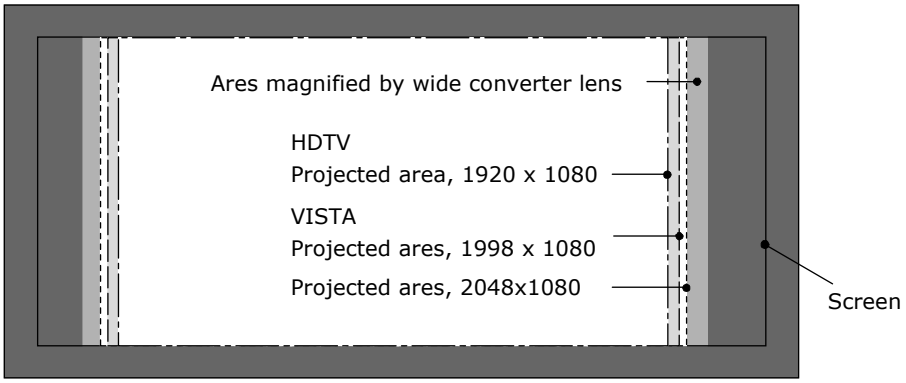

1.3.3 Selection of Primary Lens

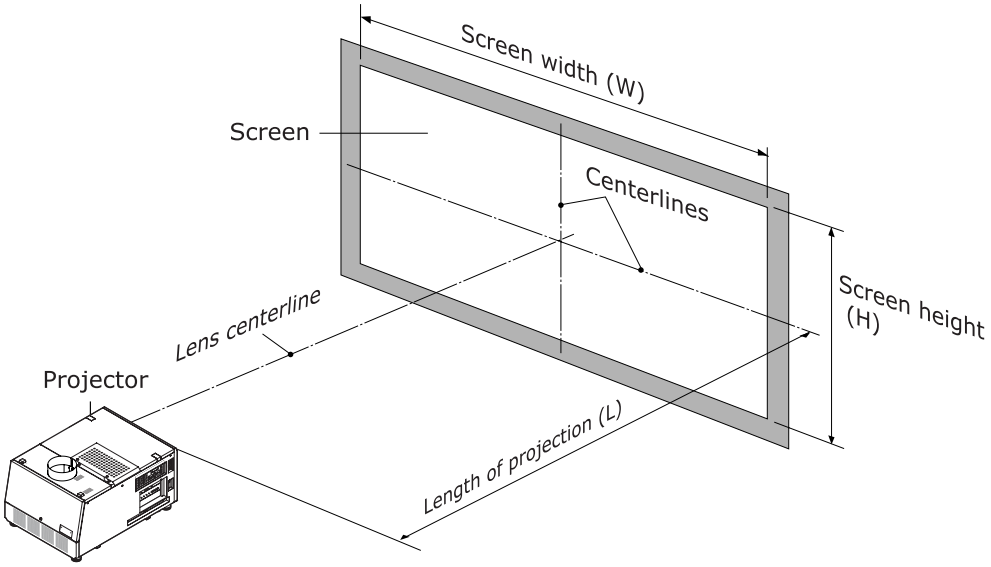

Option lenses

MODEL	Magnifying
NC-60LS13Z	1.30 - 1.75
NC-60LS14Z	1.40 - 2.05
NC-60LS16Z	1.59 - 2.53
NC-60LS19Z	1.90 - 3.25
NC-60LS24Z	2.4 - 3.9
NC-60LS39Z	3.9 - 6.52

How to Calculate the Magnification of Primary Lens

SCOPE projection:

$$\text{Primary lens magnification} = \frac{\text{Length of projection (L)}}{\text{Screen width (W)} \div \text{Anamorphic lens magnification}}$$

Use 1x for anamorphic lens magnification if this lens is not in use.

VISTA (FLAT)/HDTV projection:

$$\text{Primary lens magnification} = \frac{\text{Length of projection (L)}}{\text{Screen width (W)} \times (2048 \div \text{Number of pixels per horizontal line})}$$

* Number of pixels per horizontal line: 1998 for VISTA(FLAT); 1920 for HDTV
* Select a lens that meets the magnification requirement for both SCOPE and VISTA(FLAT)/HDTV screen types.

Example of Primary Lens Calculation

If the projection distance (L) = 32 m, the screen width (W) = 16 m and the anamorphic lens is not used:

$$\text{SCOPE projection} = \frac{32\text{m}}{16\text{m} \div 1} = 2.0\text{x}$$

$$\text{VISTA (FLAT) projection} = \frac{32\text{m}}{16\text{m} \times (2048 \div 1998)} = 1.95\text{x}$$

$$\text{HDTV projection} = \frac{32\text{m}}{16\text{m} \times (2048 \div 1920)} = 1.88\text{x}$$

Therefore, "NC-60LS16Z", which satisfies the magnifications in all of the above projections, is selected as the primary lens.

1.4 Carrying the projector

When carrying the projector, attach the handles for carry (sold separately: NC-60HD01) to the main unit and carry the projector using the handles. Ask your distributor for details on purchasing the handles. If you are not using the handles, make sure that you carry the projector by holding the base of the main unit.

⚠Warning	• To carry the projector, a minimum of five persons are required. • Whenever carrying the projector, please be sure to attach the handles and hold the handles. • Before attaching the handle, remove the "lens" and "wide converter lens turret", otherwise the main unit may become damaged due to vibrations and impacts during transportation. • Please make sure that the pins for anti-drop of handles are inserted on the handles before carrying the projector witch handles. If the pins for anti-drop of handles are not inserted during carrying the projector with handles, this may cause the projector to drop and thereby lead to injury.

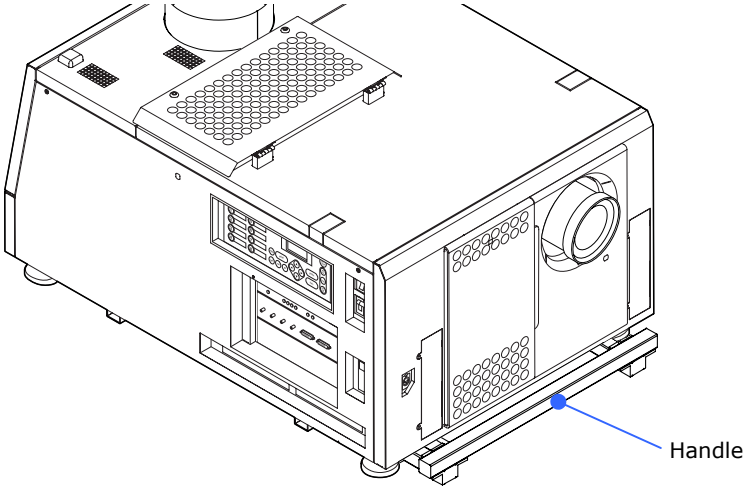

1.4.1 Handles installation locations

The handles can be installed in the following three locations.

Front/Back installation	Left/Right installation	
	Push the handle all the way in to use	Pull the handle to use
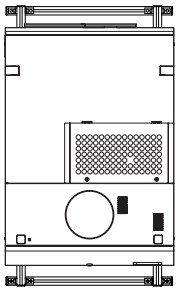	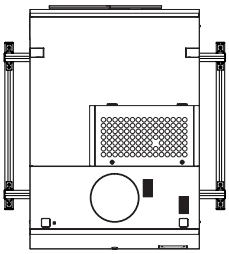	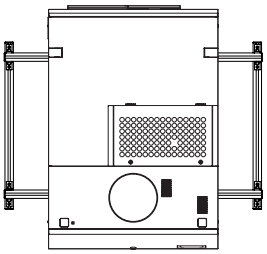

Note

- The handles cannot be attached while the projector is in the shipping box. Remove the projector form the shipping box before attaching the handles.
- When installing the handles to the front and back, insert the handle all the way in to use it. Do not pull the handle out to use the handle when it is in the front and back position.

1.4.2 Installing and removing the handles

⚠Warning	• Please make sure that the pins for anti-drop of handles are inserted on the handles before carrying the projector witch handles. If the pins for anti-drop of handles are not inserted during carrying the projector with handles, this may cause the projector to drop and thereby lead to injury.

Installing the handles

[1] Remove the projector from the shipping box

[2] Mount the handle in the attachment position in the projector base.

[3] Insert the handle pins for anti-drop of handle (4 pieces) into the holes in the attachment position.

See section "1.4.1 Handles installation locations" (See page 24) for the handle installation locations. The following diagram shows an example of front and back installation.

Note

- When installing the handles, be sure that the caution label on the handle faces up.

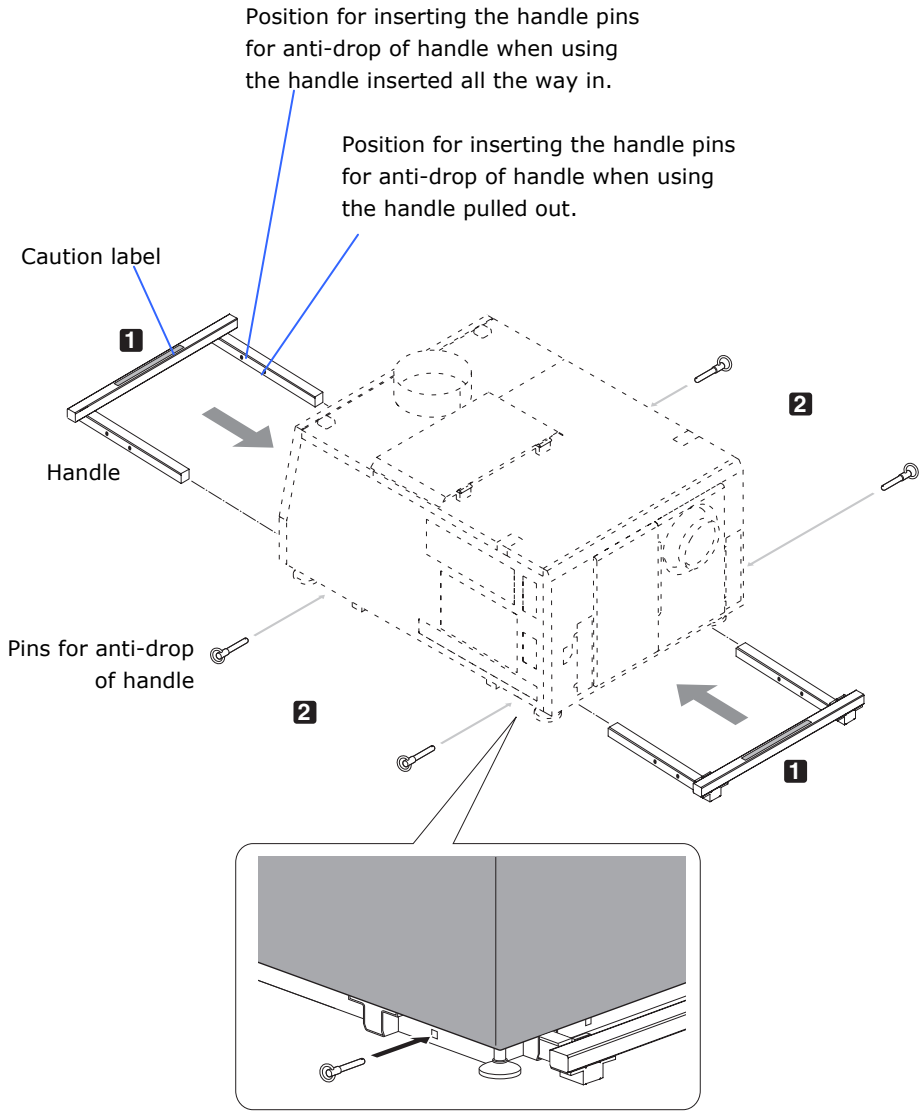
Position for inserting the handle pins for anti-drop of handle when using the handle inserted all the way in.
Position for inserting the handle pins for anti-drop of handle when using the handle pulled out.
Caution label
1
Handle
2
Pins for anti-drop of handle
2
1

Removing the handles

[1] Remove the handle pins for anti-drop of handles (4 pieces).

[2] Pull out the handle from the projector.

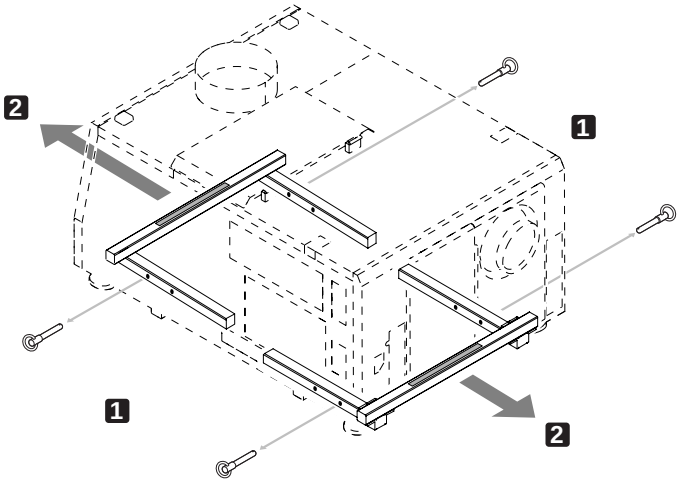

1.5 Mounting and removing the projector covers

This section provides guideline information on how to mount and remove covers on the projector. The cover key and the lamp door key are required in order to mount and remover the covers.

⚠Caution	• Make sure that the AC power supply is cut before removing the cover. Otherwise, electric shock may result.

Name of the cover

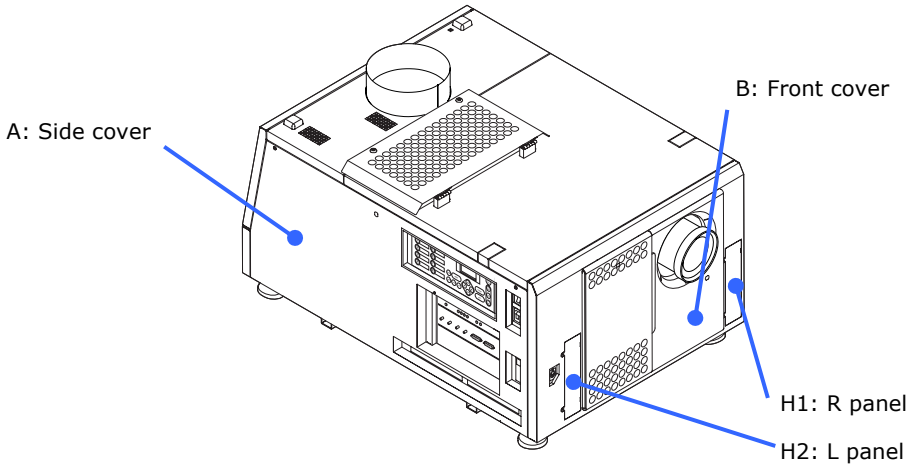

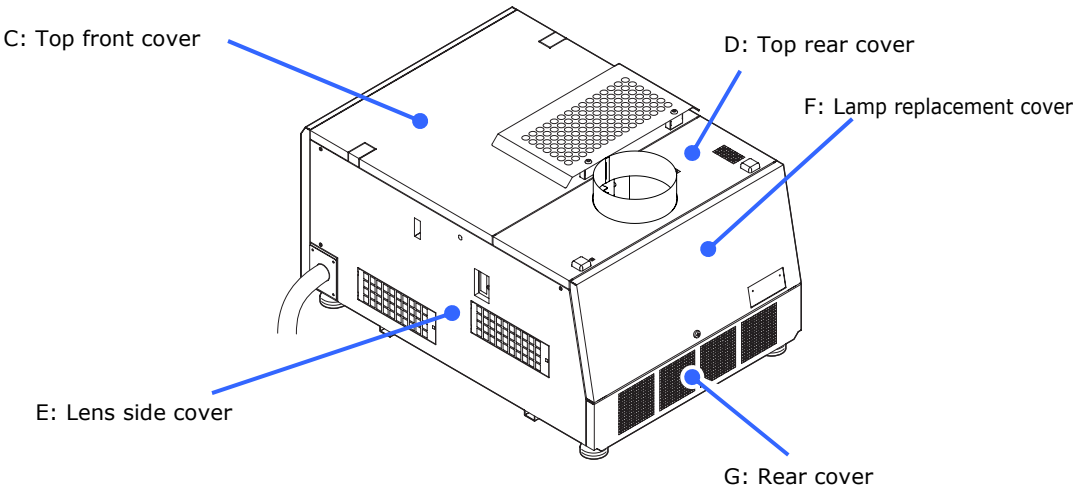

Note

- If you remove the front cover, side cover, or lens side cover, the following error message is displayed on the LCD screen of the main unit operating panel by the tamper detection circuit of the signal input board.
  "Tamper Fail", "Service Door Open"

  Video input to the HDSDI port of the signal input board cannot be displayed while an error message is being displayed. Refer to "3.2 Recovering from Tamper Errors" (page 83) for the recovery procedure.

Remarks for cover removal

- The "C: Top front cover" cannot be removed unless "A: Side cover" and "E: Lens side cover" are removed first.
- The "D: Top rear cover" cannot be removed unless " A: Side cover", "C: Top front cover", "E: Lens side cover" and "F: Lamp replacement cover" are removed first.
- The "G: Rear cover" cannot be removed unless "A: Side cover ", "E: Lens side cover" and "F: Lamp replacement cover" are removed first.

The table below shows the covers which need to be removed at each step.

Step		Covers (*: the covers which need to be removed at each step)								
		A	B	C	D	E	F	G	H1	H2
C1 connection	Connecting the power cable	-	*	-	-	-	-	-	-	-
C2 connection	Connecting the power cable (for the lamp power supply)	-	*	-	-	-	-	-	-	-
	Connecting the AC power cable (for the projector power supply)	-	*	-	-	-	-	-	-	-
Mounting the Primary lens		-	*	-	-	-	-	-	-	-
Mounting the Anamorphic lens motorized turret		-	-	-	-	-	-	-	*	*
Mounting the Small iris		-	-	-	-	*	-	-	-	-
Mounting the Image media block (optional)		*	-	-	-	-	-	-	-	-
Mounting the Multimedia switcher (optional)		*	-	-	-	-	-	-	-	-
Mounting the Exhaust equipment		-	-	-	-	-	-	-	-	-

1.5.1 Mounting and removing the front cover

[1] Unlock the front cover.

Unlock the cover using the cover key.

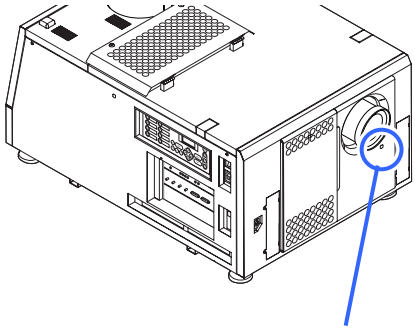

[2] Remove the front cover.

Remove the cover by lifting it up.

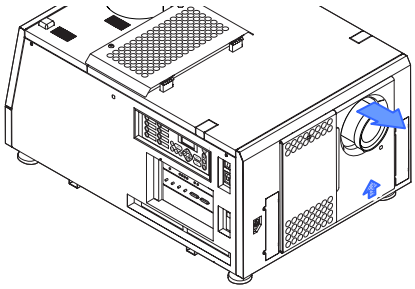

To mount the cover, perform the removal procedure in reverse. Make sure that you do not forget to lock the key lock.

1.5.2 Mounting and removing the side cover

[1] Unlock the side cover.

Unlock the cover using the cover key.

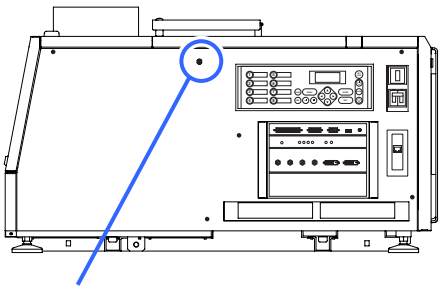

Key lock

[2] Loosen the five fixing screws of the side cover.

Loosen five screws of the side cover until they are free to spin.
The screws do not detach from the cover.

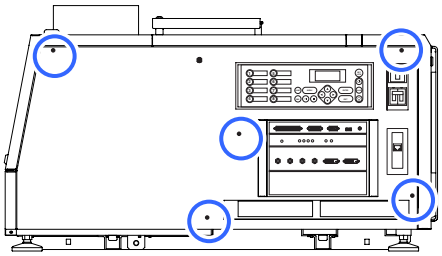

[3] Remove the side cover.

Remove the cover by rotating it towards you and lifting it up.

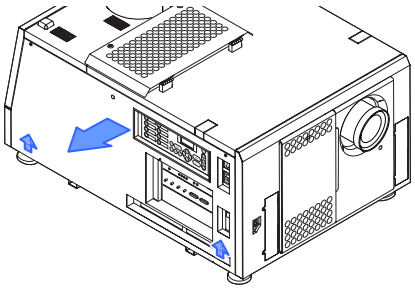

To mount the cover, perform the removal procedure in reverse. Make sure that you do not forget to tighten the screws or to lock the key lock.

1.5.3 Mounting and removing the lens side cover

[1] Unlock the lens side cover.

Unlock the cover using the cover key.

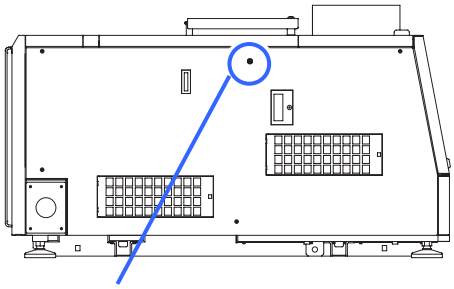

Key lock

[2] Loosen the five fixing screws of the Lens side cover.

Loosen five screws of the lens side cover until they are free to spin. The screws do not detach from the cover.

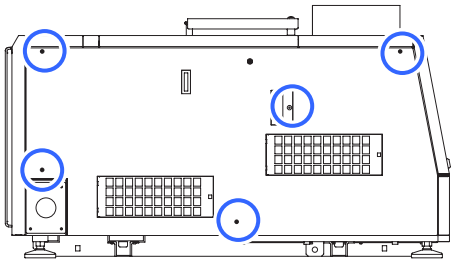

[3] Remove the Lens side cover.

Remove the cover by rotating it towards you and lifting it up.

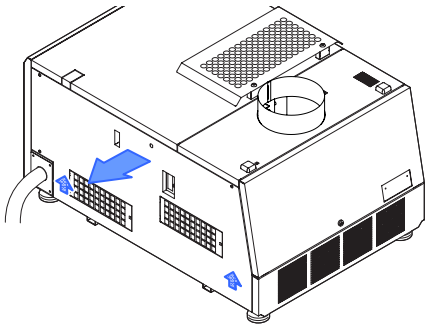

To mount the cover, perform the removal procedure in reverse. Make sure that you do not forget to tighten the screws or to lock the key lock.

1.5.4 Mounting and removing the top front cover

[1] Remove the side cover and the lens side cover.

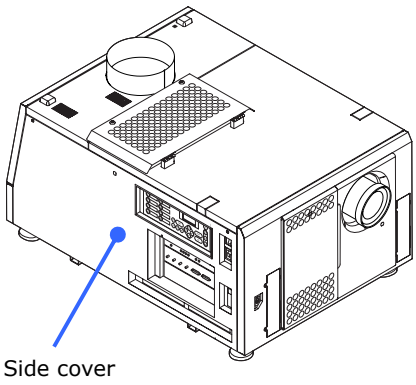

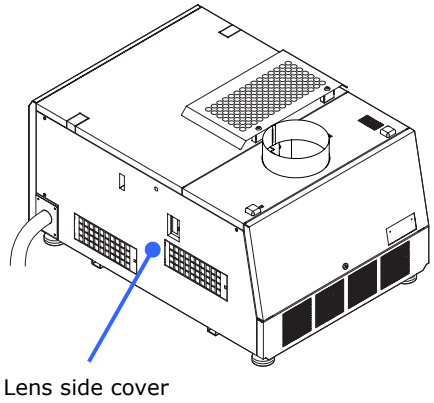

[2] Remove the screws affixing the upper front cover (one each on the left and right sides).

[3] Remove the top front cover.

Remove the cover by lifting it up.

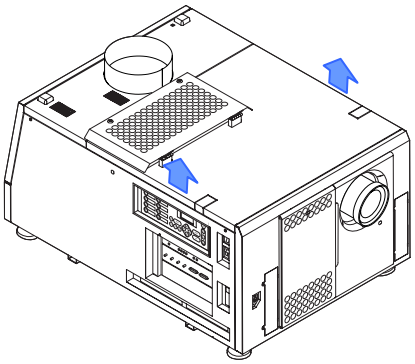

To mount the cover, perform the removal procedure in reverse.
Make sure that you do not forget to tighten the screws or to lock the key lock when mounting the side cover or lens side cover.

1.5.5 Mounting and removing the lamp replacement cover

[1] Unlock the lamp replacement cover.

Unlock the cover using the lamp door key.

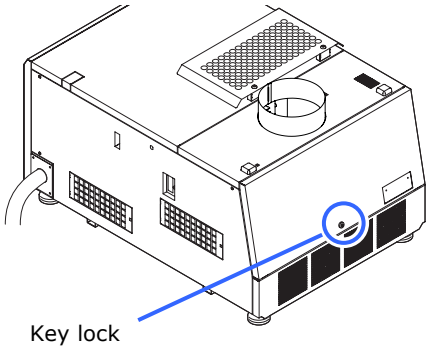

[2] Remove the lamp replacement cover.

Remove the lamp replacement cover by pulling up the covers.

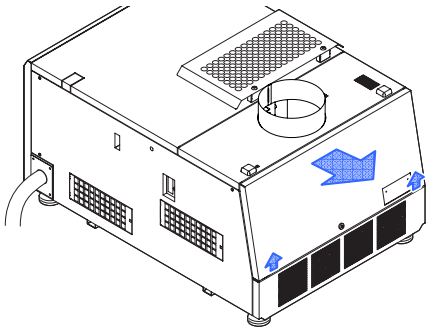

To mount the cover, perform the removal procedure in reverse. Make sure that you do not forget to lock the key lock.

1.5.6 Mounting and removing the top rear cover

[1] Remove the side cover and lens side cover.

[2] Remove the top front cover.

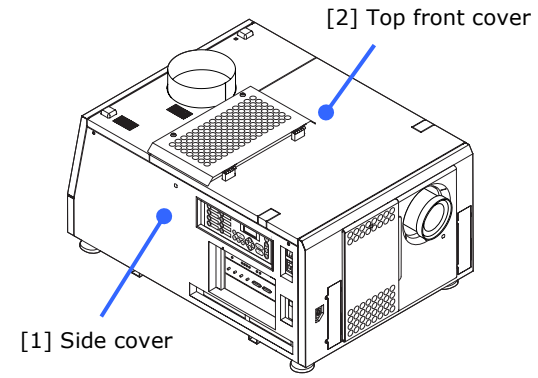

[3] Remove the lamp replacement cover.

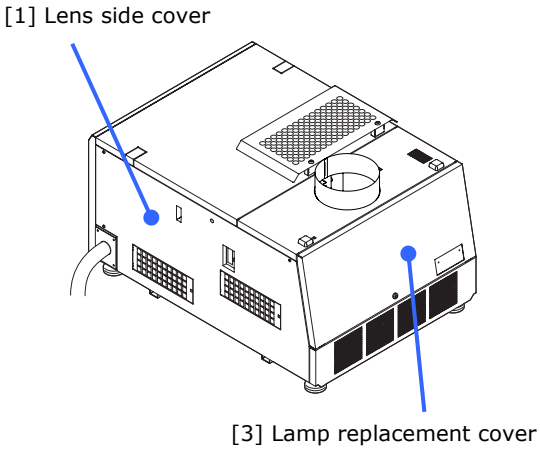

[4] Remove the two fixing screws of the top rear cover.

[5] Remove the top rear cover.

Remove the cover by lifting it up.

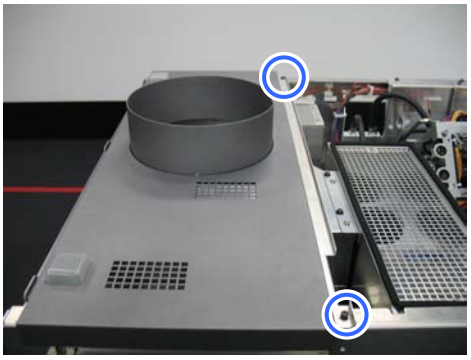

To mount the cover, perform the removal procedure in reverse.
Make sure that you do not forget to tighten the screws or to lock the key lock when mounting the side cover, lens side cover or lamp replacement cover.

2.

Setting Up Your Projector

2.1 Setup procedure

Set up the projector according to the procedure below. This chapter describes the installation procedure until turning on of the power.

- Step 1
Projector installation (See page 37)
- Step 2
Connecting the power cable (See page 38)
- Step 3
Mounting the primary lens (See page 66)
- Step 4
Mounting the anamorphic lens motorized turret (See page 68)
- Step 5
Installation of Small Iris (See page 69)
- Step 6
Mounting Exhaust equipment (See page 78)
- Step 7
Mounting the lamp bulb (See page 81)
- Step 8
Mount the following optional parts as required.
Install a multimedia switcher (See “MM3000B Installation Manual”)
Install a image media block (See “Media block Installation Manual”)

2.2 Projector installation

Move the projector to the projection position and install it corresponding to the screen and projection conditions.
To correct the inclination to the right or left of the projector, use the level adjusters at 4 positions. You can extend the level adjuster to 10 mm at the maximum (Rotate it counterclockwise for extension).

⚠Caution	• To adjust the level adjusters of the projector, extend the two level adjusters at the front and the back at the same time so that the weight is imposed to them equally. If you adjust only one adjuster, the weight is not imposed equally, which may result in level adjuster failure.

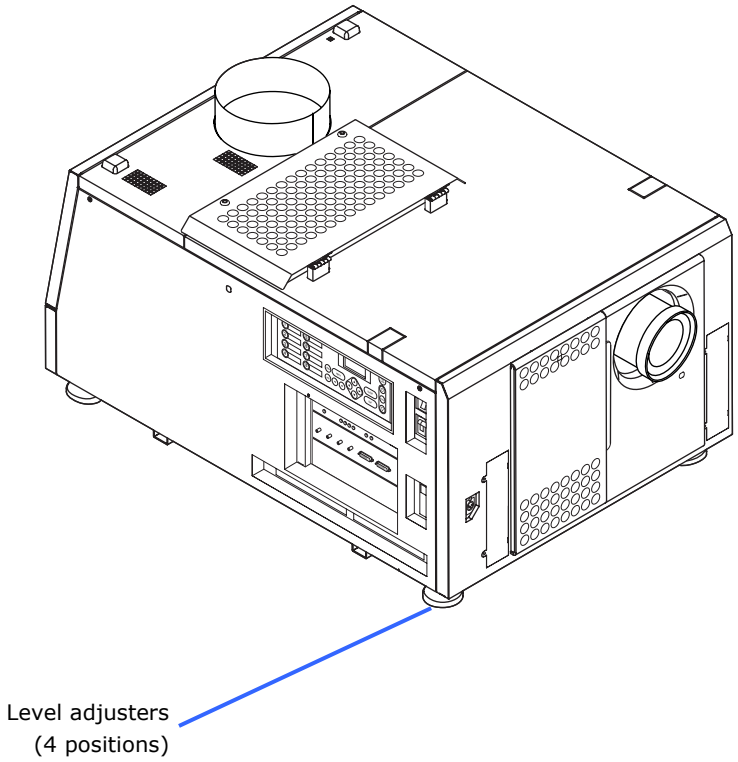

2.3 Connecting the power cable

Connect the power cable of the projector. The AC power cable is not attached as an accessory. Be sure to have professional technicians do any power supply construction.

⚠Warning	• Carefully read the contents described in this section before connection and connect the cables according to the proper procedure. Inappropriate handling may cause fatal, serious or other bodily injuries due to fire or electric shock.

⚠Caution	• Make sure that the AC power supply is disconnected before carrying out the work of connecting the power supply cable. • Be sure to follow the contents described in this section. • Entrust a specialist to carry out the power supply work from the power supply equipment of the building to the place of projector installation. • Be sure to ground the equipment to ensure safety. To avoid electric shock, request a professional to carry out the grounding and related works. Make sure to ground the equipment before supply of the AC power.

2.3.1 Power supply construction specifications

There are two different ways to connect the power cords, the C1 connection and the C2 connection.

• C1 connection

AC power is provided to the projector power supply and the lamp power supply by a single cable.

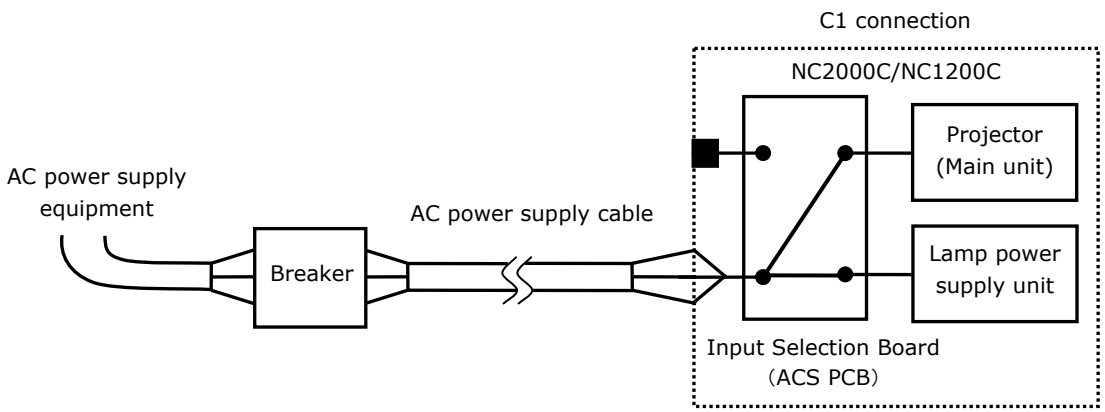

● C2 connection

AC power is provided to the projector power supply and the lamp power supply by separate cables.

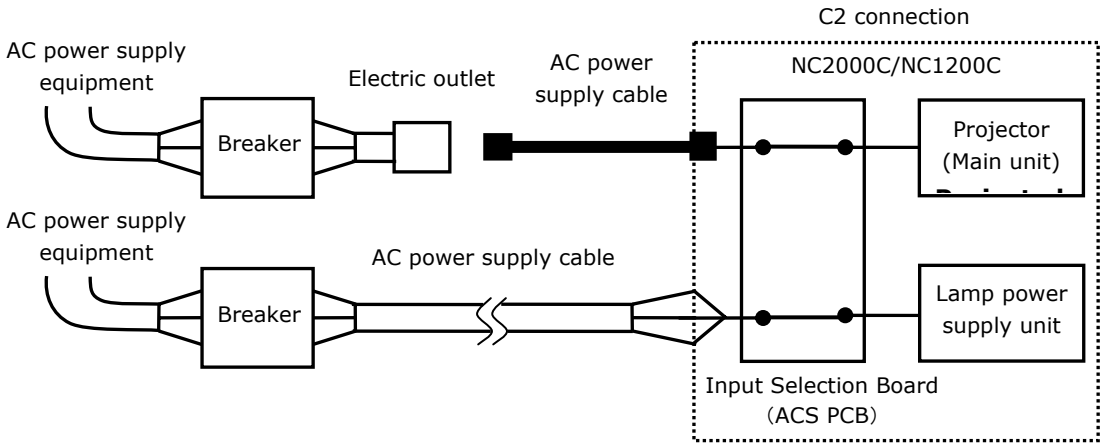

AC power supply equipment

- Do not connect AC power supply voltages to the projector other than those indicated below.

NC1200C

When using with a C1 connection
200 - 240 V AC, single phase, 50/60 Hz
When using with a C2 connection
100 - 240 V AC, single phase, 50/60 Hz (projector power supply)
200 - 240 V AC, single phase, 50/60 Hz (lamp power supply)

NC2000C

When using with a C1 connection
200 - 240 V AC, single phase, 50/60 Hz
When using with a C2 connection
100 - 240 V AC, single phase, 50/60 Hz (projector power supply)
200 - 240 V AC, single phase, 50/60 Hz (lamp power supply)

Breakers

- When connecting the AC power supply from the power supply equipment of the building to the projector, be sure to connect it through a breaker. The capacity of the breaker must be as indicated below.

NC1200C

When using with a C1 connection
- Power supply for projector + power supply for lamp
  200 - 240 V AC : 20A

When using with a C2 connection
- Power supply for projector
  100 - 240 V AC : 10A
- Power supply for lamp
  200 - 240 V AC : 15A

NC2000C

When using with a C1 connection
- Power supply for projector + power supply for lamp
  200 - 240 V AC : 30A

When using with a C2 connection
- Power supply for projector
  100 - 240 V AC : 10A
- Power supply for lamp
  200 - 240 V AC : 30A

Input Selection Board (ACS PCB)

- The power supply connection method is configured by the wiring to the input selection board. The configurations are as follows.

Connection method	Wiring configuration	
	Connector A	Connector B
C1 connection	power cord marked with label 1	power cord marked with label 2
C2 connection	power cord marked with label 2	power cord marked with label 1

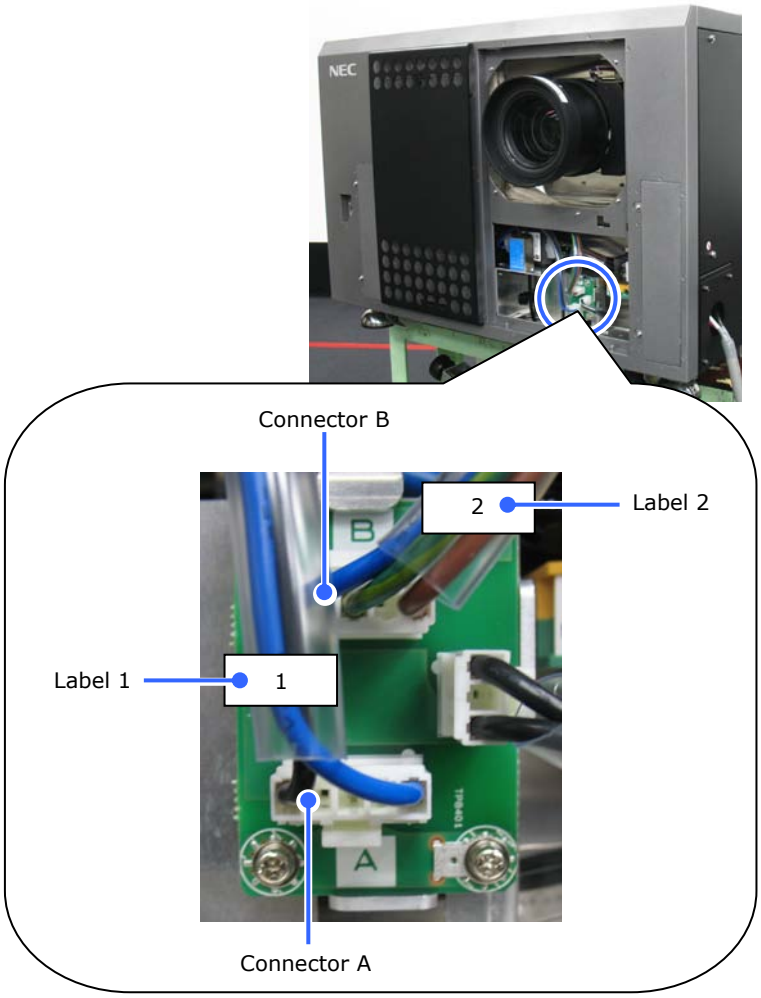

Caution	• Do not change any other wiring except for the power cords marked with label 1 and label 2.

AC power supply cable

- For the AC power cable, use a cable of thickness as appropriate for the installation country and made of copper as shown below.
- Use a round type UL-listed solderless terminal for the section connected to the main unit. In addition, when clamping this terminal with the cable, use an UL listed tool.

Compatible Cables and Solderless Terminals

The specifications of the terminals for attaching the power cables are as follows.

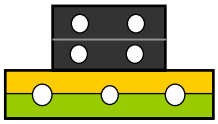

Power supply terminal L, N

Grounding terminal G

The size of the solderless terminal to use and the fastening torque of the screws varies depending on the type of terminal block.
Use the cable and solderless terminal that is suitable for the specific type of terminal block as shown in the following table.
This specifies the model name of the recommended solderless terminals. Use these parts or equivalent parts. If you are unable to use the recommended solderless terminals, ensure that you use terminals of the dimensions shown in the following diagram.

⚠Warning	• The power supply unit handles large electrical currents. To maintain safety, use wires with the specifications as shown in the following table, and affix to the terminals at the designated attachment torque. • Always use solderless terminals with the dimensions as shown in the following diagram. • The use of parts with dimensions other than as designated creates a risk of the AC power supply unit short circuiting due to the terminal block generating heat and melting because the terminal block of the lamp power supply unit cannot be attached correctly.

Power supply terminal L, N

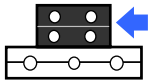

	JIS	IEC/EN	UL	CSA
Thickness of compatible wiring (using solderless terminal)	14mm^2	14mm^2	AWG6 or AWG8	AWG6 or AWG8
Solderless terminal dimensions	M5 x 10			
Tightening torque	2.0 to 2.5Nm			
Solderless terminal dimensions	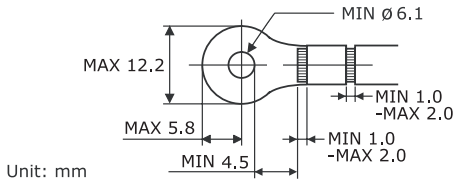			
Solderless terminal recommended part (J.S.T parts)	Model R8-5		When using AWG6: Model R14-5 When using AWG8: Model R8-5	

Grounding terminal G

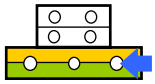

	JIS	IEC/EN	UL	CSA
Thickness of compatible wiring (using solderless terminal)	14mm^2	14mm^2	AWG6 to AWG8	AWG6 to AWG8
Solderless terminal dimensions	M6 x 15			
Tightening torque	3.5 to 5.0Nm			
Solderless terminal dimensions	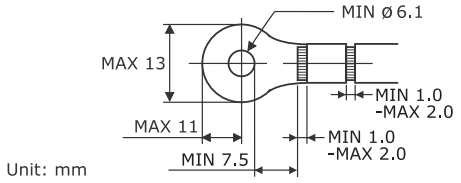			
Solderless terminal recommended part (J.S.T parts)	Model 8-8NS		When using AWG6: Model R14-6 When using AWG8: Model 8-8NS	

J.S.T: J.S.T. Manufacturing Co. Ltd.

Connecting the cable

In order to attach the power cable to the connector block, connect the wires using the following procedure such that the individual wires cannot directly touch each other.

[1] Remove the power cable sleeves from the terminals to ensure that the sleeves are not pinched by the terminal attachment screw.

Pull back the sleeves from the terminal area before fastening the screw to prevent the sleeves from being pinched.

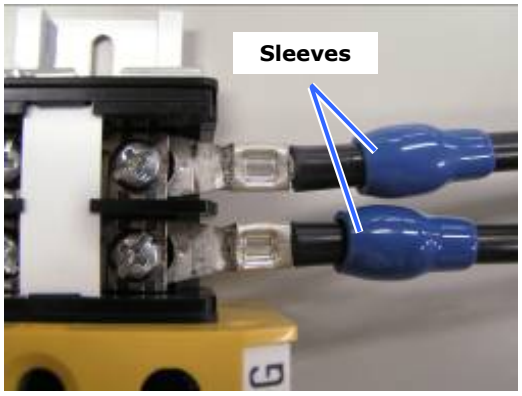

[2] Attach the sleeves after tightening the screw.

Tighten the fixing screw to the designated torque.

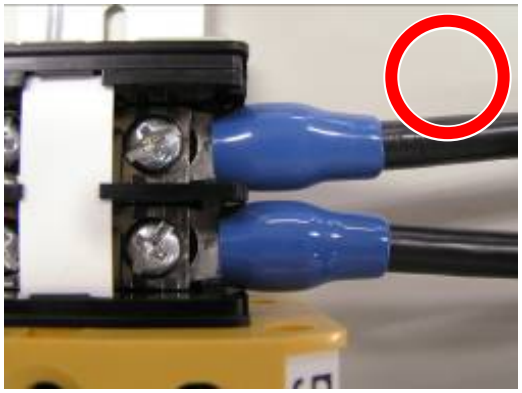

Use sleeves and secure the insulation to ensure that terminals do not touch each other. If the cables are attached to the power supply terminal without using sleeves, there is a risk of the terminals touching each other as shown in the photograph on the right.

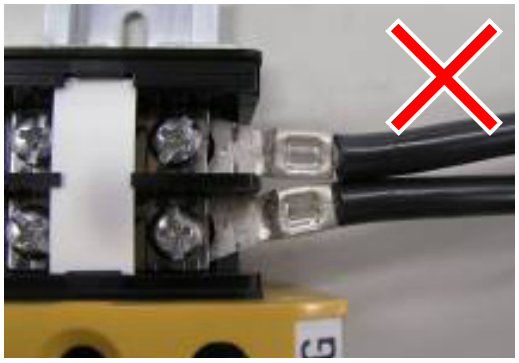

When connecting the cables to the ground terminal block, ensure that parts other than the solderless terminal (such as cable wires and fittings) are not pinched within the terminal fastening area.

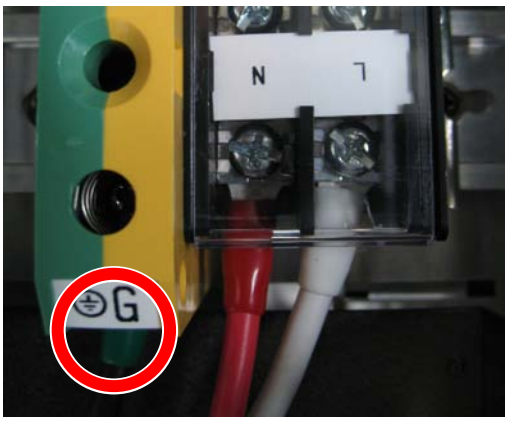

When correctly fastened

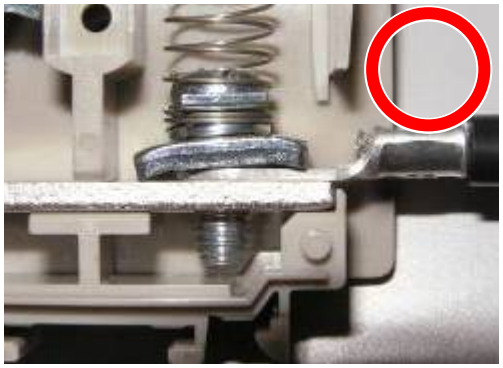

When the cable wire has become pinched due to using a solderless terminal with dimensions other than as designated

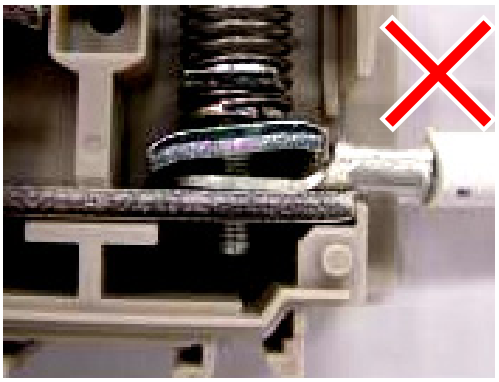

AC Power Cord During C2 Connection (For Projector Power Supply)Connecting the cable

The projector is equipped with an IEC60320-1 C14 connector to connect an AC power supply cable. Ensure that the AC power cables that connect the connectors built into the projector to the AC power mains have the current capacities as shown below.

Power supply voltage	Projector power current	Power cord current capacity
AC 100V-120V	10A	12.5A or more
AC 200V-240V	5A	6.5A or more

Furthermore, use plugs, cords, and connectors that are suitable for the regulations of the country of installation, as shown in the following table.

Germany

Plug	Cord	Connector	Cord set
CEE 7 	H05VV-F 3 x 1mm^2 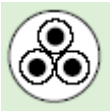	IEC60320-1 (Form: C13) 	-

USA

Plug	Cord	Connector	Cord set
NEMA 5-15P 	SJT AWG 16 	UL817 	-

Japan

Plug	Cord	Connector	Cord set
JIS C 8303 	HVCTF 3 x 1.25mm^2 	IEC60320-1 (Form: C13) 	-

China

Plug	Cord	Connector	Cord set
GB2099.1 	227IEC53(RVV)-300/500 	GB17465.1 	GB15934 

2.3.2 Power cable connecting procedure (C1 connection)

[1] Remove the front cover of the projector.

<1> Unlock the cover using the cover key.

<2> Remove the cover by lifting it up.

[2] Connect the power cable to the power supply terminal.

L: AC (Live)

N: AC (Neutral)

G: GND (Protective Earth)

The screws for the terminals do not come off. (They have a jump-up structure.)
Upon connection completion, close the terminal cover of the power supply terminal.

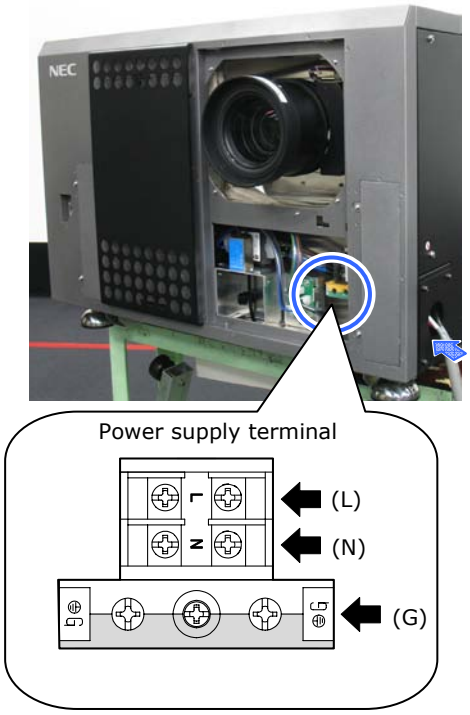

[3] Set the power supply method to C1 connection.

<1> Connect the power cord marked with label 1 to connector A.

<2> Connect the power cord marked with label 2 to connector B.

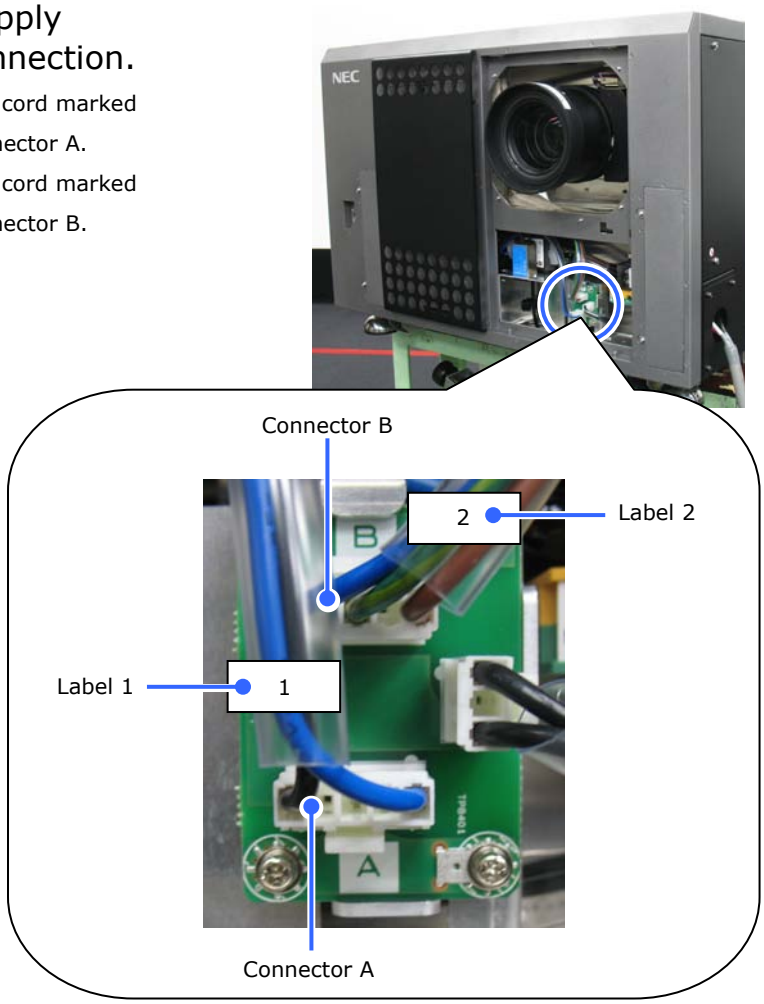

[4] Mount the front cover of the projector.

<1> Align the two holes in the bottom of the cover around the protrusions in the bottom of the projector and insert the protrusions into the holes, then close the cover.

<2> Lock using the cover key.

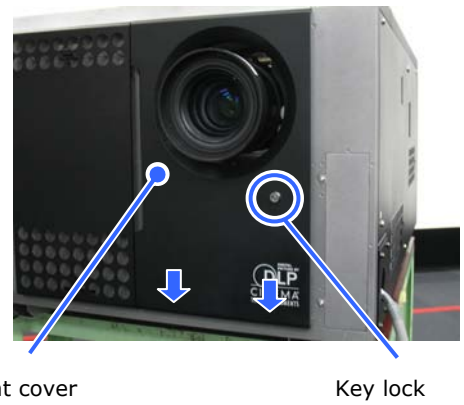

This completes the connection of the power cable. Next, mount a primary lens.

2.3.3 Power cable connecting procedure (C2 connection)

[1] Remove the front cover of the projector.

<1> Unlock the cover using the cover key.

<2> Remove the cover by lifting it up.

[2] Connect the power cable to the power supply terminal.

L: AC (Live for Lamp power supply unit)

N: AC (Neutral for Lamp power supply unit)

G: GND (Protective Earth)

The screws for the terminals do not come off. (They have a jump-up structure.)
Upon connection completion, close the terminal cover of the power supply terminal.

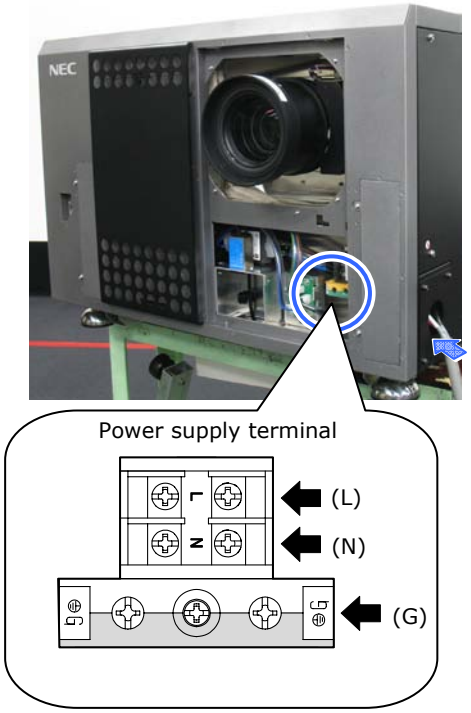

[3] Set the power supply method to C2 connection.

<1> Connect the power cord marked with label 2 to connector A.

<2> Connect the power cord marked with label 1 to connector B.

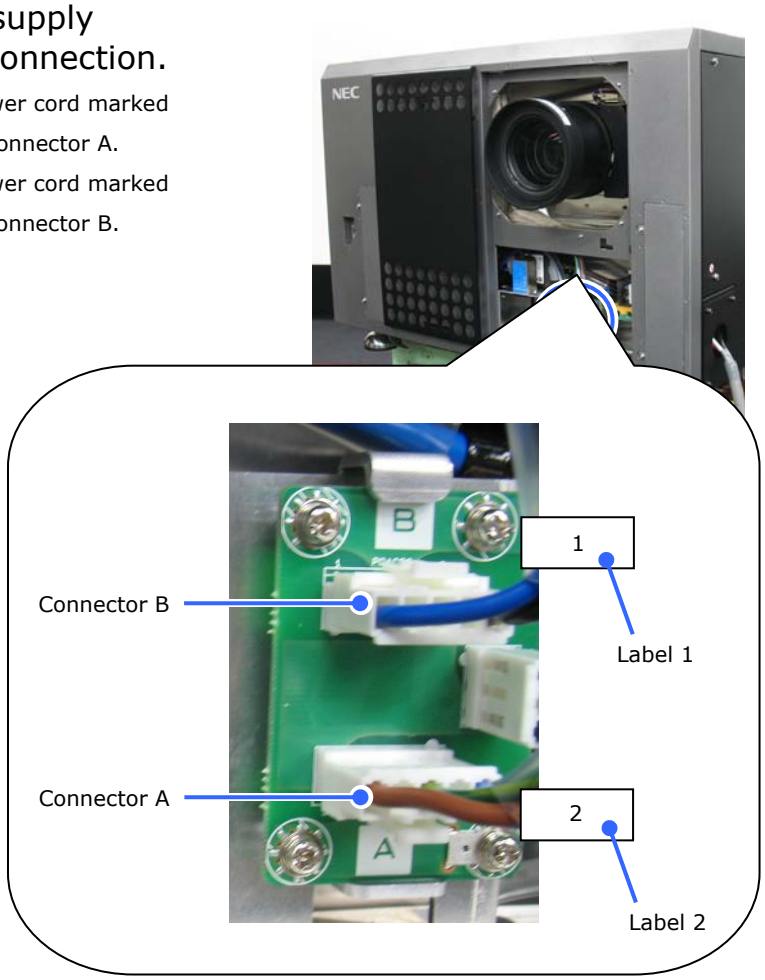

[4] Connect the AC power cord.

Connect the AC power cord (for projector main unit) to the main unit of the projector by passing it through the wiring slot on the bottom of the projector. Secure the AC power cord using the clamp.

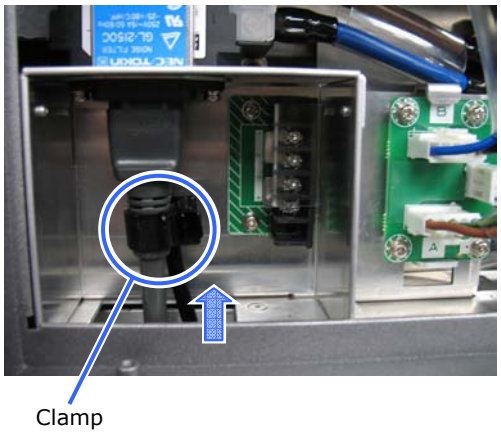

[5] Mount the front cover of the projector.

<1> Align the two holes in the bottom of the cover around the protrusions in the bottom of the projector and insert the protrusions into the holes, then close the cover.

<2> Lock using the cover key.

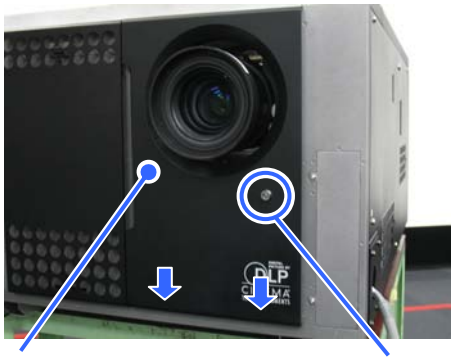

This completes the connection of the power cable. Next, mount a primary lens.

2.4 Anschließen des Netzkabels

Schließen Sie das Netzkabel des Projektors an. Das Netzkabel ist nicht abziehbar sondern fest mit dem Gerät verbunden. Lassen Sie die Installation einer Netzstromversorgung unbedingt nur von professionellen Elektrikern durchführen.

⚠Warnung	• Lesen Sie diesen Abschnitt sorgfältig durch, bevor Sie die Kabel anschließen, und befolgen Sie beim Anschließen der Kabel die entsprechenden Anweisungen. Durch unsachgemäße Handhabung kann es infolge von Bränden oder elektrischen Schlägen zu tödlichen, schweren oder anderen Verletzungen kommen.

⚠Achtung	• Vergewissern Sie sich, dass das Gerät von der Stromversorgung getrennt ist, bevor Sie das Netzkabel anschließen. • Befolgen Sie auf jeden Fall die Anweisungen in diesem Abschnitt. • Beauftragen Sie einen Fachmann mit der Installation die Stromzufuhr von der Stromversorgungsanlage des Gebäudes zum Aufstellort des Projektors. • Erden Sie das Gerät, um die Sicherheit zu gewährleisten. Um elektrische Schläge zu vermeiden beauftragen Sie einen Fachmann mit der Erdung und den damit verbundenen Arbeiten. Stellen Sie sicher, dass das Gerät geerdet ist, bevor Sie Strom zuführen.

2.4.1 Technische Daten zum Netzanschluss

Die Netzkabel können auf zweierlei Weise angeschlossen werden: zum einen über Anschluss C1 und zum anderen über Anschluss C2.

• Anschluss C1

Die Stromversorgung zu den Netzteilen des Projektors und der Lampe wird über ein einzelnes Kabel zugeführt.

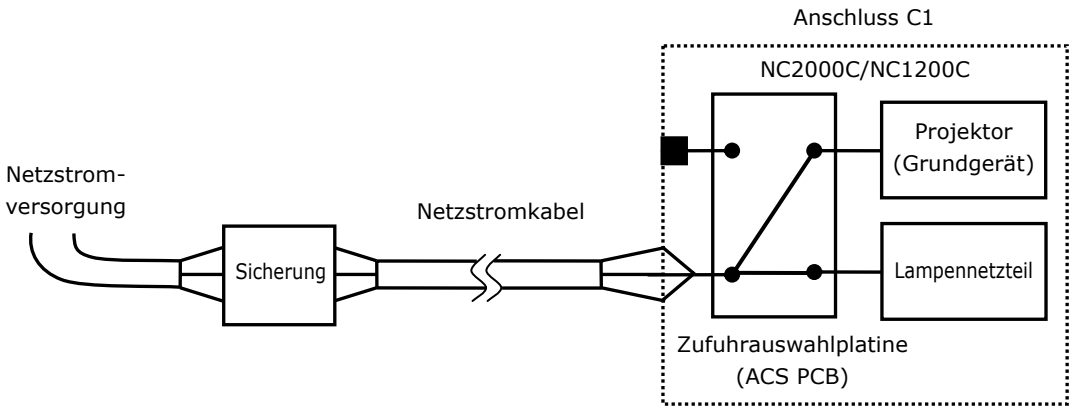

● **Anschluss C2**

Die Stromversorgung zu den Netzteilen des Projektors und der Lampe wird über getrennte Kabel zugeführt.

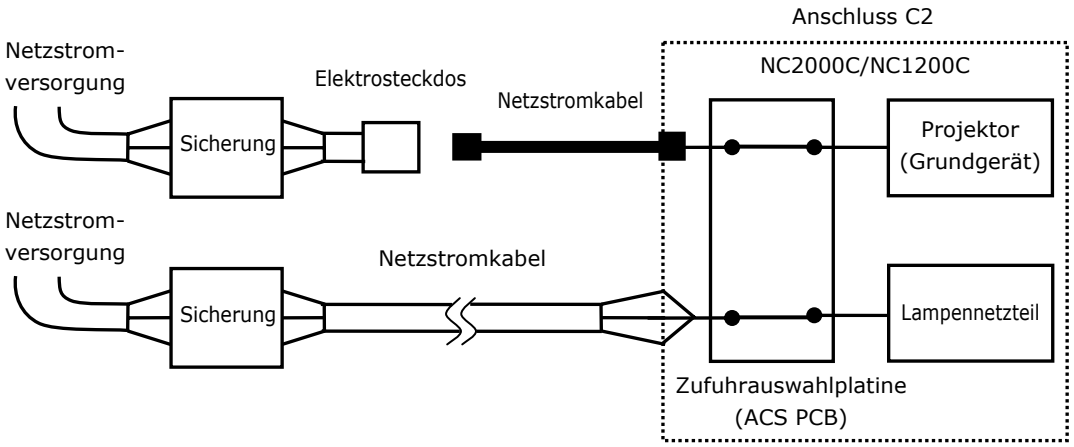

Wechselstromversorgung

- Betreiben Sie den Projektor nur mit den unten angegebenen Netzspannungen.

NC1200C

Bei Verwendung von Anschluss C1
200 – 240 V AC, einphasig, 50/60 Hz
Bei Verwendung von Anschluss C2
100 – 240 V AC, einphasig, 50/60 Hz (Stromversorgung des Projektors)
200 – 240 V AC, einphasig, 50/60 Hz (Stromversorgung der Lampe)

NC2000C

Bei Verwendung von Anschluss C1
200 – 240 V AC, einphasig, 50/60 Hz
Bei Verwendung von Anschluss C2
100 – 240 V AC, einphasig, 50/60 Hz (Stromversorgung des Projektors)
200 – 240 V AC, einphasig, 50/60 Hz (Stromversorgung der Lampe)

Sicherungen

- Stellen Sie beim Anschließen der Stromversorgungsanlage des Gebäudes an den Projektor sicher, dass dies über eine Sicherung erfolgt. Der maximale Kennwert der Sicherung muss den folgenden Angaben entsprechen.

NC1200C

Bei Verwendung von Anschluss C1
- Stromversorgung des Projektors + Stromversorgung der Lampe
  200 – 240 V AC : 20 A

Bei Verwendung von Anschluss C2
- Stromversorgung des Projektors
  100 – 240 V AC : 10 A
- Stromversorgung der Lampe
  200 – 240 V AC : 15 A

NC2000C

Bei Verwendung von Anschluss C1
- Stromversorgung des Projektors + Stromversorgung der Lampe
  200 – 240 V AC : 30 A

Bei Verwendung von Anschluss C2
- Stromversorgung des Projektors
  100 – 240 V AC : 10 A
- Stromversorgung der Lampe
  200 – 240 V AC : 30 A

Zufuhrauswahlplatine (ACS PCB)

- Die Netzanschlussmethode wird durch die Beschaltung der Zufuhrauswahlplatine festgelegt. Die Konfigurationsmöglichkeiten sind im Folgenden aufgeführt.

Anschlussmethode	Beschaltungskonfiguration	
	Steckverbinder A	Steckverbinder B
Anschluss C1	Netzkabel mit der Markierung 1	Netzkabel mit der Markierung 2
Anschluss C2	Netzkabel mit der Markierung 2	Netzkabel mit der Markierung 1

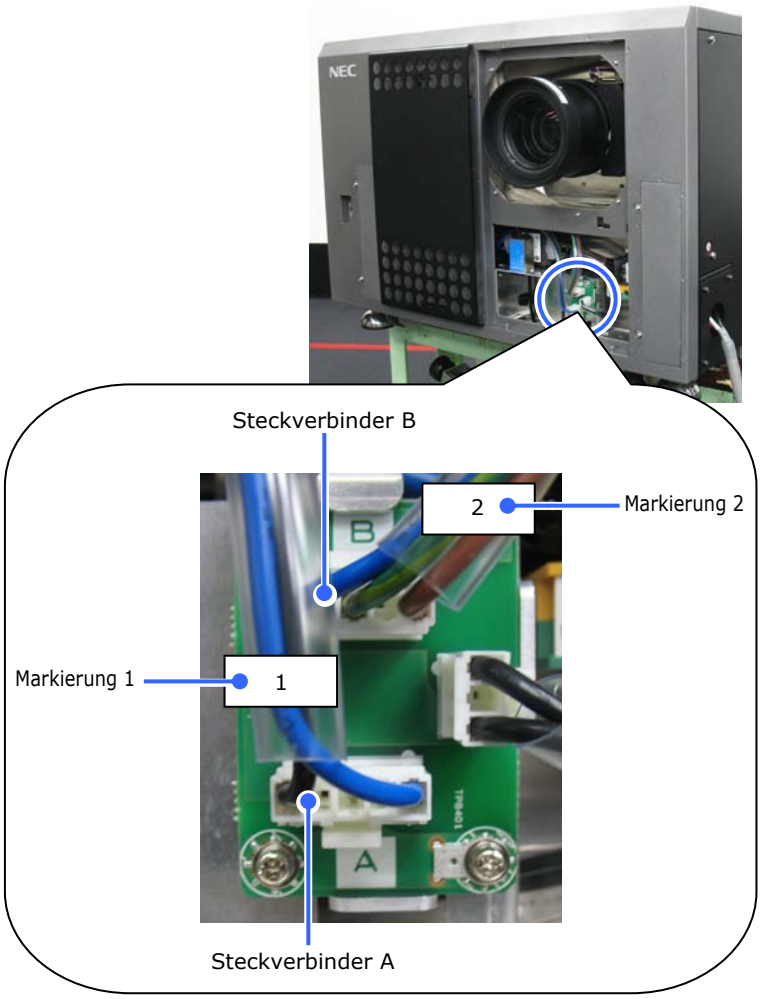

⚠Achtung	• Ändern Sie beim Festlegen der Beschaltungskonfiguration nur den Anschluss der mit Markierung 1 und Markierung 2 gekennzeichneten Netzkabel.

Netzkabel

- Verwenden Sie als Netzkabel ein Kabel mit einer Kabelader aus Kupfer und einem Leiterquerschnitt, der den Vorgaben des jeweiligen Landes entspricht (siehe folgende Abbildung).
- Verwenden Sie eine runde lötfreie Anschlussklemme mit dem UL Listing-Prüfzeichen für den an der Haupteinheit angeschlossenen Kabelabschnitt. Verwenden Sie darüber hinaus bei der Klemmung dieser Anschlussklemme ein Werkzeug mit dem UL Listing-Prüfzeichen.

Kompatible Kabel und lötfreie Anschlussklemmen

Die technischen Daten für die Anschlussklemmen zum Befestigen der Netzkabel sind im Folgenden aufgeführt.

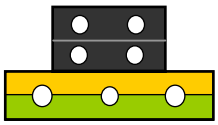

Netzklemme L, N

Erdklemme G

Die Größe der zu verwendenden lötfreien Anschlussklemme und das Anzugsmoment der Schrauben hängen von der Art des Klemmenblocks ab.
Verwenden Sie das Kabel und die lötfreie Anschlussklemme, die jeweils für den entsprechenden Klemmenblock geeignet sind (siehe folgende Tabelle).
In dieser Tabelle sind die Modellnamen der empfohlenen lötfreien Anschlussklemmen angegeben. Verwenden Sie die angegebenen oder gleichwertige Bauteile. Wenn Sie die empfohlenen lötfreien Anschlussklemmen nicht verwenden können, stellen Sie sicher, dass Sie Anschlussklemmen verwenden, deren Abmessungen den Angaben in der folgenden Tabelle entsprechen.

⚠Warnung	• Das Netzteil verarbeitet hohe elektrische Ströme. Verwenden Sie zur Gewährleistung der Sicherheit Kabeladern entsprechend den in der folgenden Tabelle aufgeführten Vorgaben, und befestigen Sie die Anschlussklemmen am angegebenen Klemmenblock. • Verwenden Sie immer lötfreie Anschlussklemmen, deren Abmessungen den Angaben in der folgenden Abbildung entsprechen. • Die Verwendung von Bauteilen mit abweichenden Abmessungen birgt die Gefahr eines Kurzschlusses des Netzteils aufgrund von Hitzeentwicklung und Schmelzen des Klemmenblocks, da der Klemmenblock für die Stromversorgung der Lampe nicht ordnungsgemäß angebracht werden kann.

Netzklemme L, N

	JIS	IEC/EN	UL	CSA
Leiterquerschnitt kompatibler Kabel (bei Verwendung lötfreier Anschlussklemmen)	14 mm^2	14 mm^2	AWG6 oder AWG8	AWG6 oder AWG8
Abmessungen lötfreier Anschlussklemmen	M5 x 10			
Anzugsmoment	2,0 bis 2,5 Nm			
Abmessungen lötfreier Anschlussklemmen	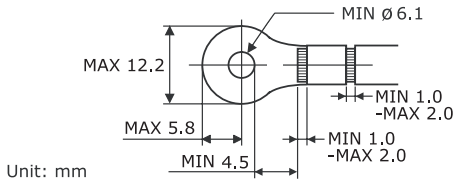			
Empfohlene Modelle für lötfreie Anschlussklemmen (J.S.T-Teile)	Modell R8-5		Bei AWG6: Modell R14-5 Bei AWG8: Modell R8-5	

Erdungsklemme G

	JIS	IEC/EN	UL	CSA
Leiterquerschnitt kompatibler Kabel (bei Verwendung lötfreier Anschlussklemmen)	14 mm^2	14 mm^2	AWG6 bis AWG8	AWG6 bis AWG8
Abmessungen lötfreier Anschlussklemmen	M6 x 15			
Anzugsmoment	3,5 bis 5,0 Nm			
Abmessungen lötfreier Anschlussklemmen	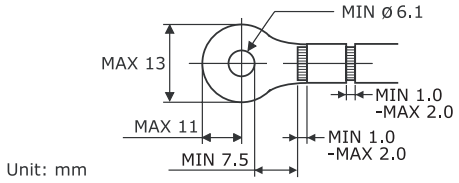			
Empfohlene Modelle für lötfreie Anschlussklemmen (J.S.T-Teile)	Modell 8-8NS		Bei AWG6: Modell R14-6 Bei AWG8: Modell 8-8NS	

J.S.T.: J.S.T. Manufacturing Co. Ltd.

Anschließen des Kabels

Schließen Sie zum Befestigen des Netzkabels am Klemmenblock die Drähte entsprechend den folgenden Anweisungen an, sodass sich die einzelnen Drähte nicht direkt berühren können.

[1] Ziehen Sie die Kabelmanschetten der Netzkabel von den Anschlussklemmen zurück, um sicherzustellen, dass diese nicht von der Schraube der Anschlussklemme eingeklemmt werden.

Ziehen Sie die Kabelmanschette von der Anschlussklemme zurück, bevor Sie die Schraube anziehen, damit die Kabelmanschette nicht eingeklemmt wird.

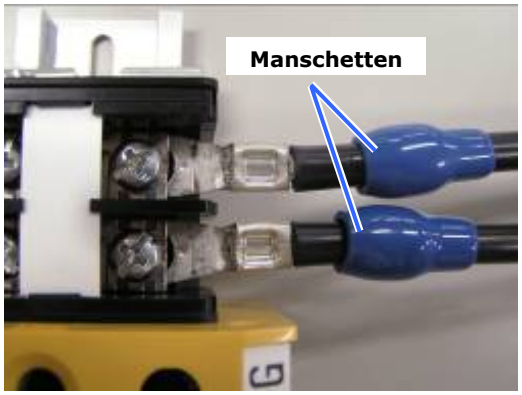

[2] Schieben Sie die Manschetten nach dem Anziehen der Schraube wieder an ihre richtige Position.

Ziehen Sie die Befestigungsschraube mit dem angegebenen Drehmoment an.

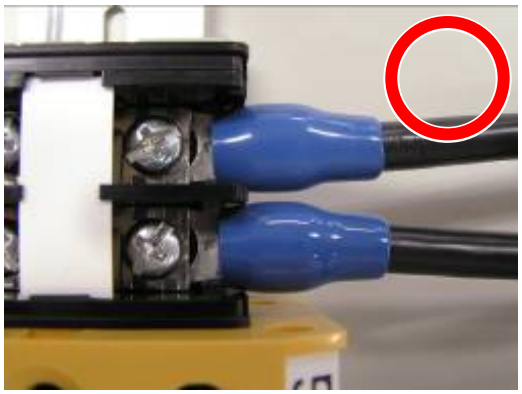

Verwenden Sie Kabelmanschetten und fixieren Sie das Isolationsmaterial, damit sich die Anschlussklemmen nicht berühren. Wenn die Kabel ohne Kabelmanschetten an der Netzklemme befestigt werden, besteht die Gefahr, dass sich die Anschlussklemmen wie in der Abbildung rechts berühren.

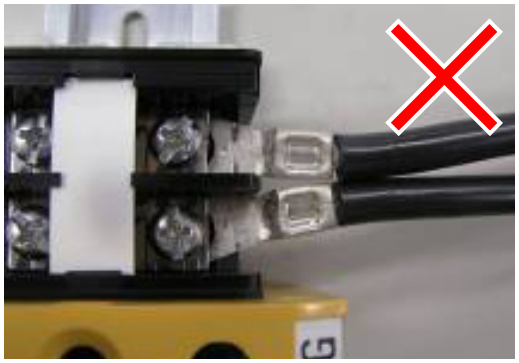

Achten Sie beim Anschließen der Kabel an die Masseanschlussklemme darauf, dass keine anderen Teile als der Quetschkabelschuh (z. B. Kabeladern und Verschraubungen) in der Klemmenbefestigung eingeklemmt werden.

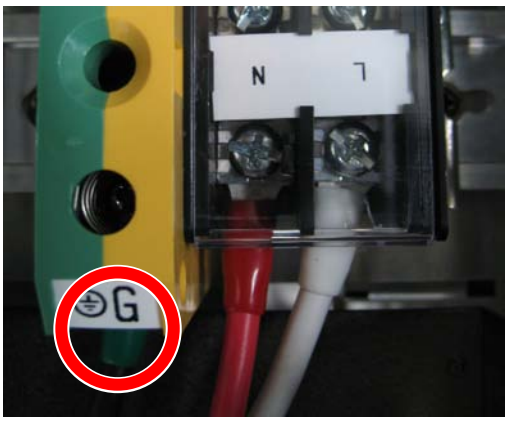

Richtig befestigt

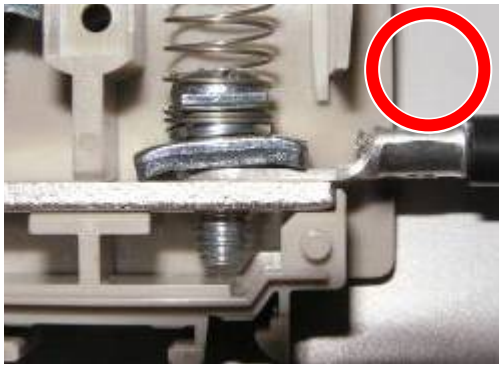

Kabeldraht ist verkantet, da eine lötfreie Anschlussklemme mit Abmessungen verwendet wurde, die nicht den Vorgaben entsprechen

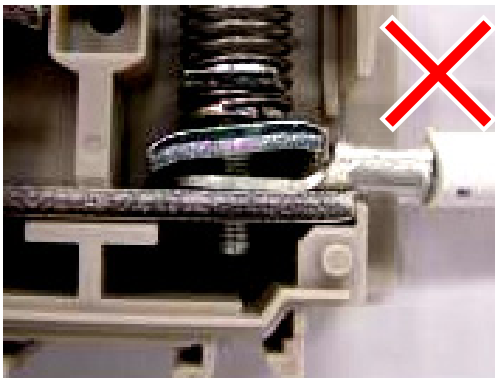

Netzkabel bei Anschluss C2 (zur Stromversorgung des Projektors) – Anschließen des Kabels

Der Projektor ist mit einem C14-Steckverbinder gemäß IEC60320-1 zum Anschließen des Netzkabels ausgestattet. Sorgen Sie dafür, dass die Netzkabel, die von den Steckverbindern am Projektor zum Netzanschluss führen, über die unten angegebenen Stromkapazitäten verfügen.

Netzspannung	Netzstrom für den Projektor	Stromkapazität des Netzkabels
100 – 120 V AC	10 A	mind. 12,5 A
200 – 240 V AC	5 A	mind. 6,5 A

Verwenden Sie zudem Stecker, Kabel und Steckverbinder, die den Vorgaben des jeweiligen Landes entsprechen (siehe dazu folgende Tabelle).

Deutschland

Stecker	Kabel	Steckverbinder	Konfektioniertes Kabel
CEE 7	H05VV-F 3 x 1 mm²	IEC60320-1 (Form: C13)	-

USA

Stecker	Kabel	Steckverbinder	Konfektioniertes Kabel
NEMA 5-15P	SJT AWG 16	UL817	-

Japan

Stecker	Kabel	Steckverbinder	Konfektioniertes Kabel
JIS C 8303	HVCTF 3 x 1,25 mm²	IEC60320-1 (Form: C13)	-

China

Stecker	Kabel	Steckverbinder	Konfektioniertes Kabel
GB2099.1	227IEC53(RVV)-300/500	GB17465.1	GB15934

2.4.2 Anweisungen zum Anschließen des Netzkabels (Anschluss C1)

[1] Nehmen Sie die vordere Abdeckung des Projektors ab.

<1> Entriegeln Sie die Verriegelungen der vorderen Abdeckung mit dem Abdeckungsschlüssel.

<2> Nehmen Sie die Abdeckung ab, indem Sie sie hochheben.

[2] Schließen Sie das Netzkabel an der Netzklemme an.

L: AC (spannungsführend)

N: AC (neutral)

G: GND(Schutzleiter)

Die Schrauben für die Anschlussklemmen lösen sich nicht. (Springverschluss.) Schließen Sie nach erfolgtem Anschluss die Abdeckung der Netzklemme.

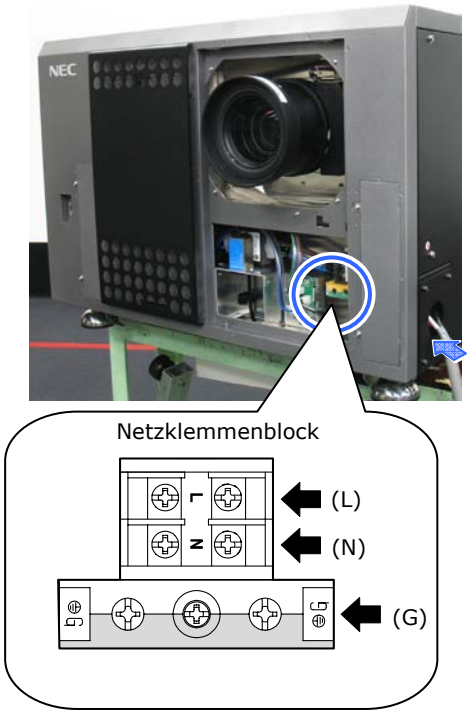

[3] Richten Sie als Netzanschlussmethode Anschluss C1 ein.

<1> Schließen Sie das Netzkabel mit der Markierung 1 am Steckverbinder A an.

<2> Schließen Sie das Netzkabel mit der Markierung 2 am Steckverbinder B an.

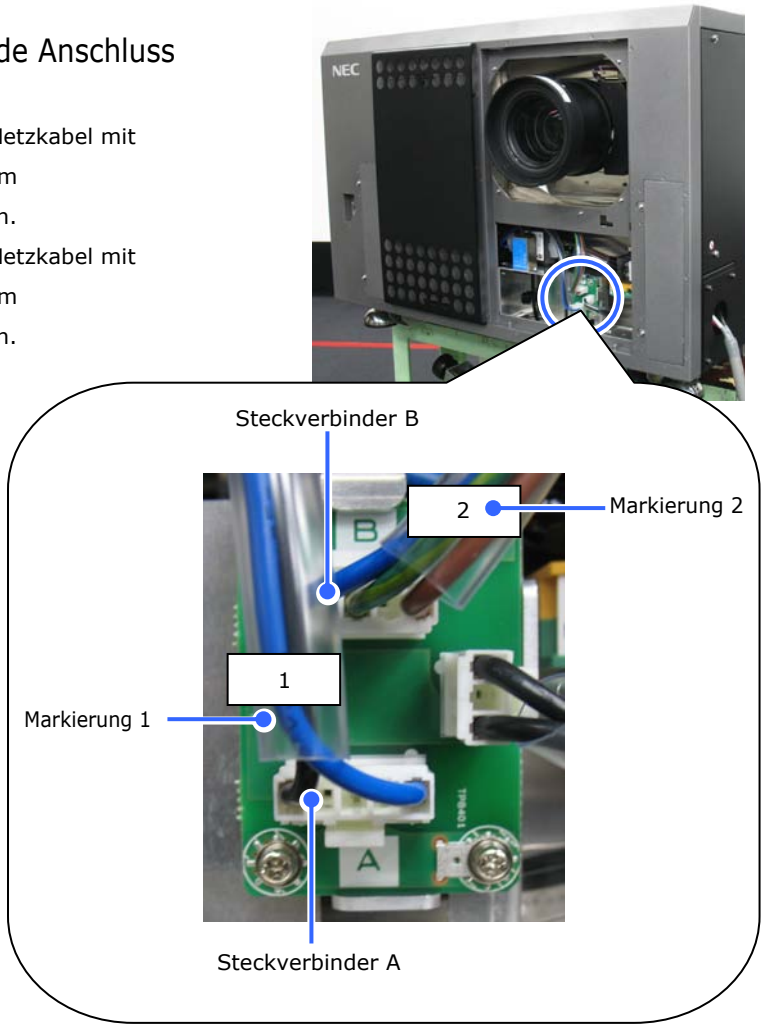

[4] Bringen Sie die vordere Abdeckung des Projektors wieder an.

<1> Setzen Sie die beiden Öffnungen unten an der Abdeckung in die vorstehenden Stifte am Gehäuse des Projektors ein, und schließen Sie dann die Abdeckung.

<2> Verriegeln Sie die Abdeckung mit dem Schlüssel für die Abdeckung.

Damit ist das Netzkabel angeschlossen. Setzen Sie nun eine Primärlinse ein.

2.4.3 Anweisungen zum Anschließen des Netzkabels (Anschluss C2)

[1] Nehmen Sie die vordere Abdeckung des Projektors ab.

<1> Entriegeln Sie die Verriegelungen der vorderen Abdeckung mit dem Abdeckungsschlüssel.

<2> Nehmen Sie die Abdeckung ab, indem Sie sie hochheben.

[2] Schließen Sie das Netzkabel an der Netzklemme an.

L: AC (spannungsführend, für die Stromversorgungseinheit der Lampe)

N: AC (neutral, für die Stromversorgungseinheit der Lampe)

G: GND (Schutzleiter)

Die Schrauben für die Anschlussklemmen lösen sich nicht. (Springverschluss.) Schließen Sie nach erfolgtem Anschluss die Abdeckung der Netzklemme.

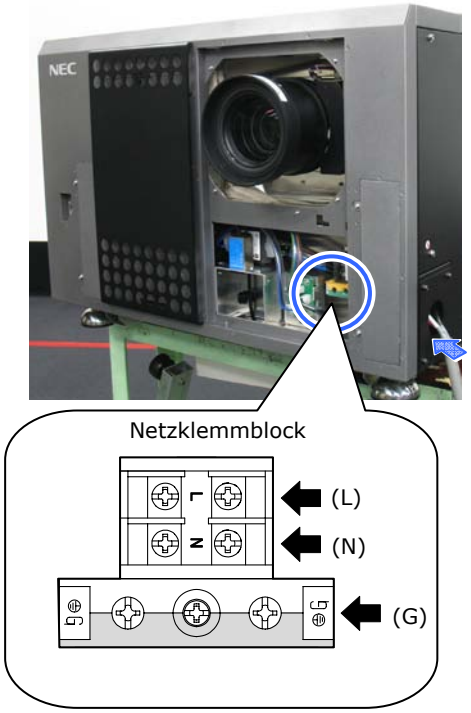

[3] Richten Sie als Netzanschlussmethode Anschluss C2 ein.

<1> Schließen Sie das Netzkabel mit der Markierung 2 am Steckverbinder A an.

<2> Schließen Sie das Netzkabel mit der Markierung 1 am Steckverbinder B an.

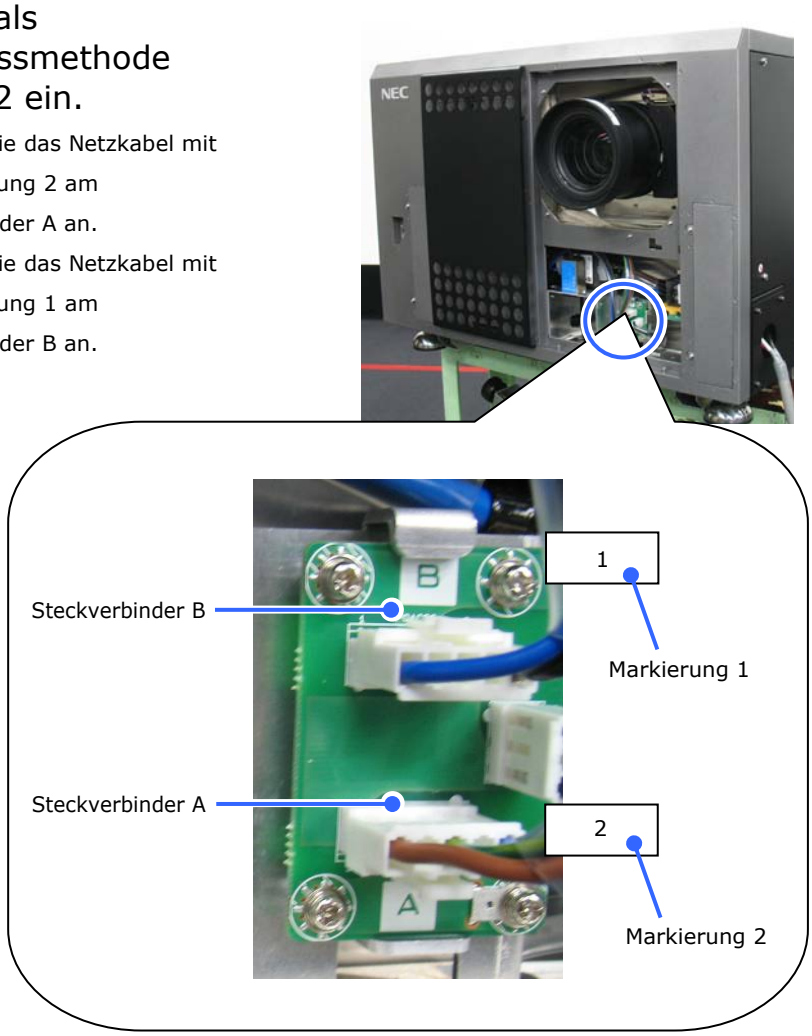

[4] Schließen Sie das Netzkabel an.

Schließen Sie das Netzkabel (für die Haupteinheit des Projektors) an die Haupteinheit des Projektors an, indem Sie es durch die Kabelöffnung an der Unterseite des Projektors ziehen. Befestigen Sie das Netzkabel mit der Klemmschraube.

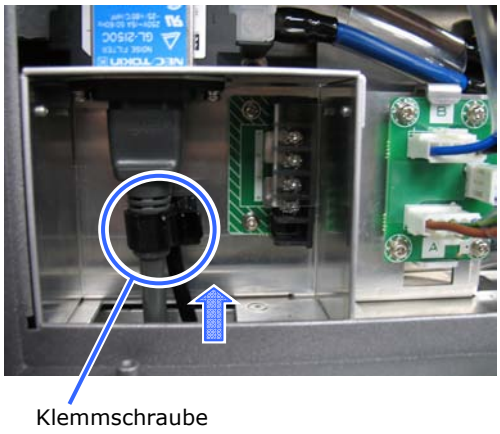

[5] Bringen Sie die vordere Abdeckung des Projektors wieder an.

<1> Setzen Sie die beiden Öffnungen unten an der Abdeckung in die vorstehenden Stifte am Gehäuse des Projektors ein, und schließen Sie dann die Abdeckung.

<2> Verriegeln Sie die Abdeckung mit dem Schlüssel für die Abdeckung.

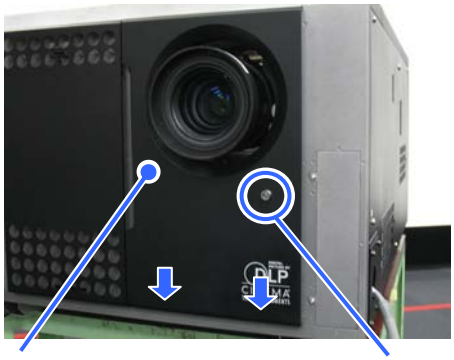

Damit ist das Netzkabel angeschlossen. Setzen Sie nun eine Primärlinse ein.

2.5 Mounting the primary lens

[1] Remove the front cover of the projector.

Unlock the cover locks using the cover key.

Remove the cover by lifting it up.

Remove the lens cap.

If the lens has a lens cap, remove the lens cap here.

[2] Place the side with the lens insertion guide hole face up, then insert the lens all the way to the back.

Align the lens ring with the control connector position, and insert it straight in.

The lens cannot be inserted all the way back if the lens fixing lever is on Lock.

In this case, use your hand or a 6 mm Allen wrench to turn the lens fixing lever clockwise to Unlock, then insert the lens.

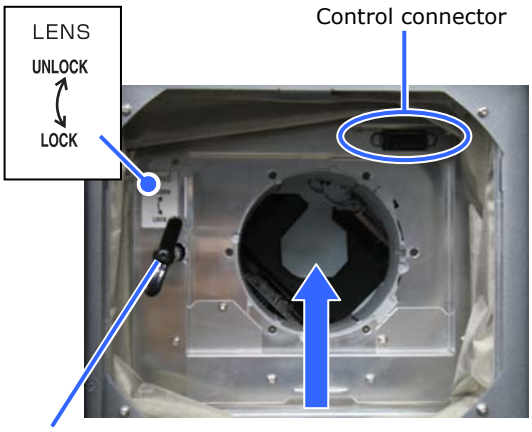

[3] Turn the lens fixing lever counterclockwise to fix the lens.

Lock the lens by turning the lens fixing lever counterclockwise with your hand or a 6 mm Allen wrench.

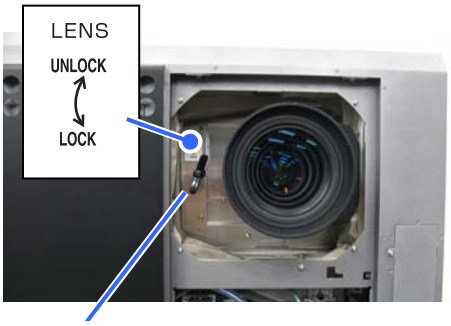

Lens fixing lever

[4] Mount the front cover of the projector.

<1> Align the two holes in the bottom of the cover around the protrusions in the bottom of the projector and insert the protrusions into the holes, then close the cover.

<2> Lock using the cover key.

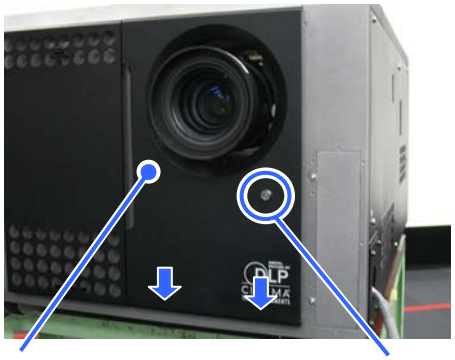

Front cover

Key lock

This completes the installation of the primary lens.
Be sure to carry out lens calibration without fail after installing the primary lens.
Refer to “3.7 Adjusting the primary lens” about calibrating the lens (See page 93).

2.6 Mounting the anamorphic lens motorized turret

Use an optional anamorphic lens or a wide converter lens for projection of cinemascope size. Anamorphic lens motorized turret (separately sold: NC-AT02) is required for mounting of the anamorphic lens or the wide converter lens.
This section describes how to attach the anamorphic lens powered turret and anamorphic lens. If you are using the wide converter lens, please read anamorphic lens as wide converter lens.

⚠Caution	• Before transporting this unit from one place to another, be sure to remove the anamorphic lens from the unit and lock all adjusting parts of the unit up. • If you need to move the projector from one place to another, be sure to detach this lens unit from the projector before moving. • Be sure to faithfully follow the instructions given in this manual. • This unit should be attached to or detached from the projector without anamorphic lens installed.

2.6.1 List of accessories attached to turret

- Anamorphic lens motorized turret

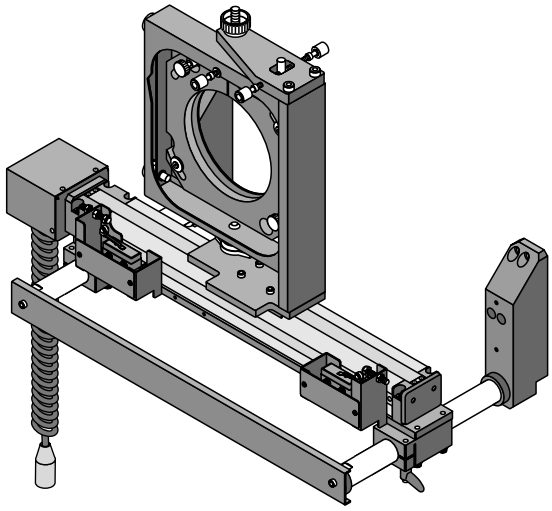

- Allen screws (hexagonal socket head screws) (M8x25): 8

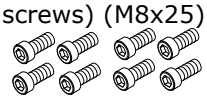

- Allen screws (hexagonal socket head screws) (M6x12): 2

- Rubber washers: 4

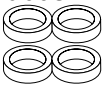

2.6.2 Descriptions of the parts in turret

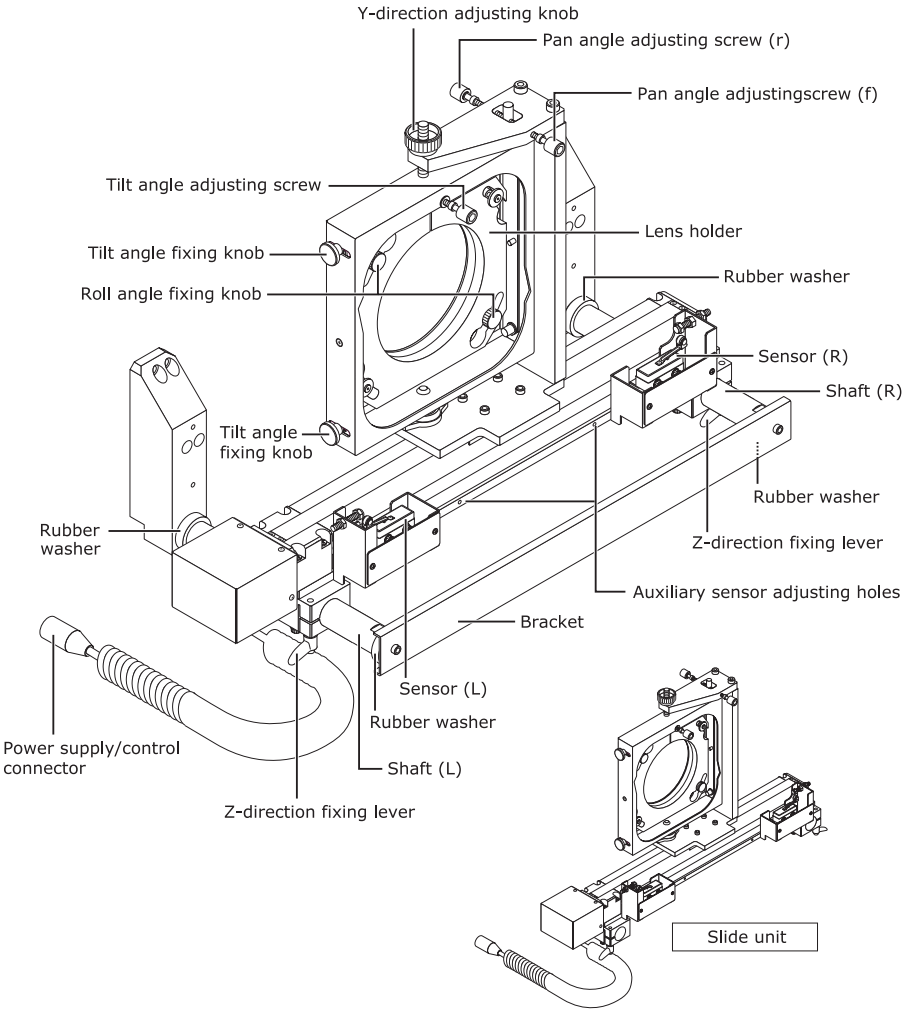

2.6.3 Mount the turret

Below, the anamorphic lens stand may be referred to simply as “the stand”, the anamorphic lens as “the anamo-lens”.

Preparations:
Prepare Allen keys (for M8 and M6 screws) and a Phillips screwdriver (also tools for adjustments)

Caution	• In the mounting steps below, DO NOT remove screws other than those indicated in each step; otherwise it could lead to injury.

[1] Remove the left and right panels from the front panel of the projector.

The panels and screws that are removed will be used when mounting the stand, so be sure to put them in a safe place.

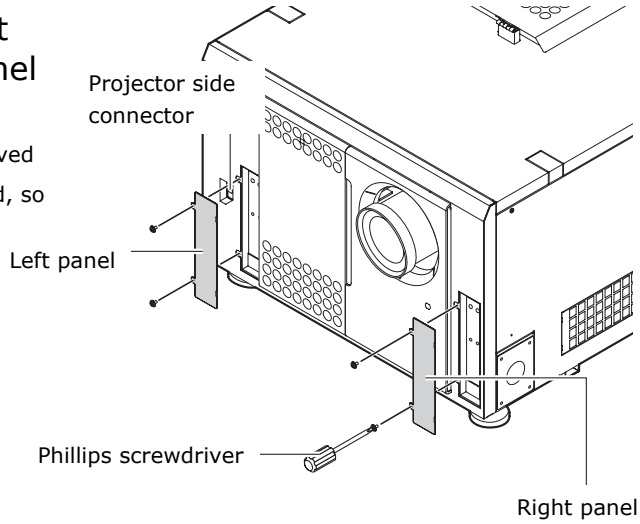

[2] Fix shaft (L) and shaft (R) to the projector using the eight included M8 Allen screws.

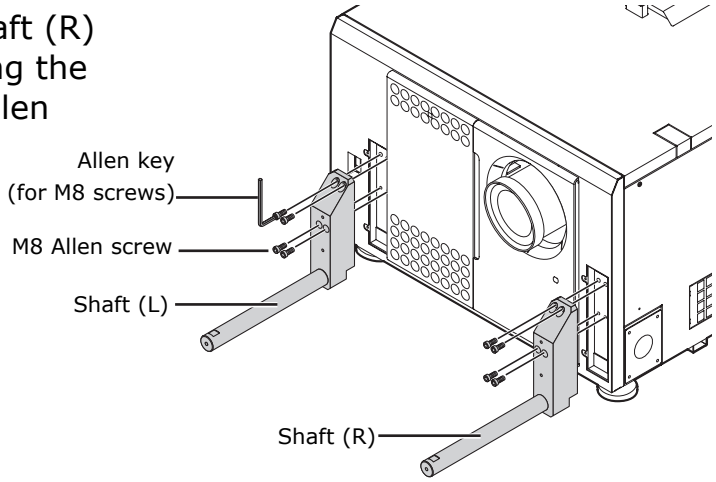

[3] Fix the slide unit to the shafts.

Mount the four included rubber washers and slide unit on shaft (L) and shaft (R), then tighten the Z-direction fixing levers on the sides to fasten.
Check that the slide unit slides smoothly in the Z direction.

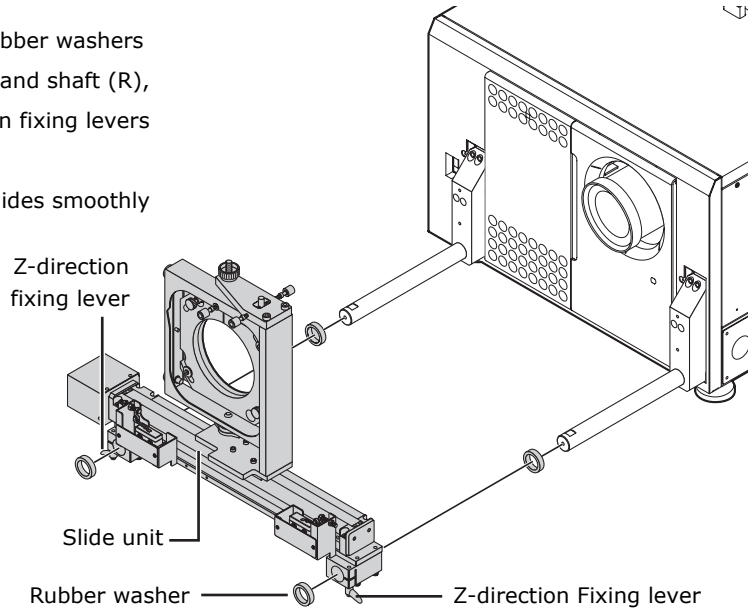

[4] Mount the bracket with using two included M6 hexagonal socket head bolts.

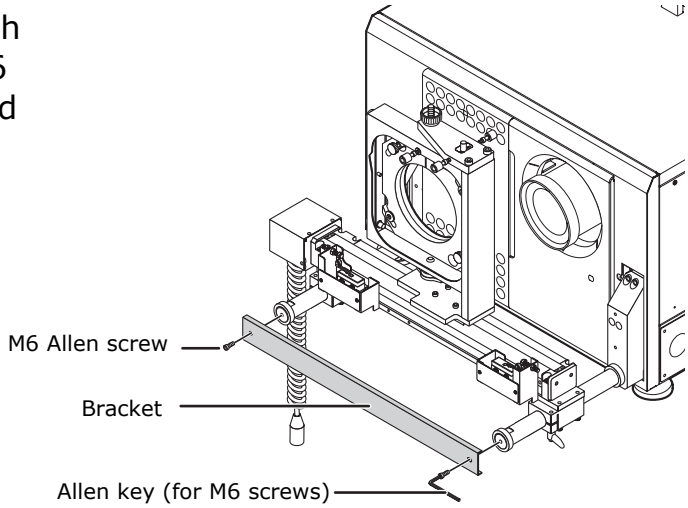

This completes the mounting of the anamo-lens motorized turret. Next, mount the anamo-lens.

2.6.4 Mounting of the anamorphic lens

This section describes the procedure for attaching the anamorphic lens. If you are attaching a wide converter lens, please read anamorphic lens as wide converter lens.

[1] Loosen the two roll angle fixing knobs, then turn the lens holder counterclockwise and remove it from the slide unit.

Turn the lens holder's knob hole to the position of the roll angle fixing knobs and pull the lens holder towards you.

⚠Caution	• Pay attention not to have the finger caught when rotating the lens holder.

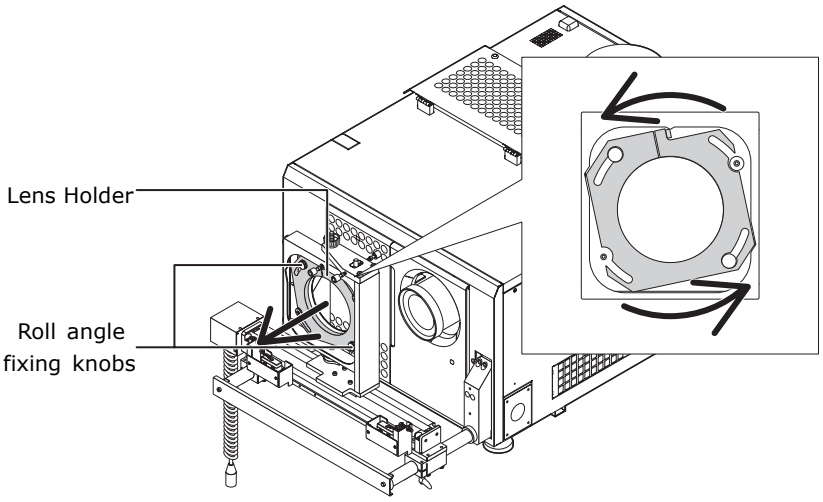

[2] Mount the lens holder onto the anamo-lens.

<1> Loosen the lens holder's lens fixing bolt.

<2> Line up the lens holder with the anamo-lens (perpendicularly) and mount it on the anamo-lens. (Be careful not to touch the lens.)

<3> Tighten the lens holder's lens fixing bolt.

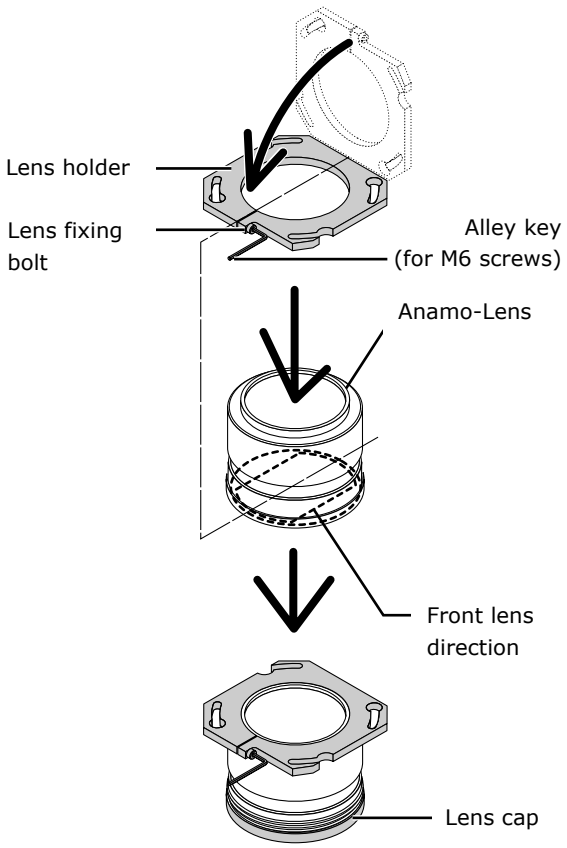

Caution	• To prevent damaging the lens, be sure to attach the lens cap over the lens when performing this operation.

[3] Mount the lens holder onto which the anamo-lens is mounted to the slide unit.

<1> Turn the lens holder's knob hole to the position of the roll angle fixing knobs, insert, then turn clockwise.

<2> Tighten the two roll angle fixing knobs and tighten the lens holder.

<3> Remove the lens cap.

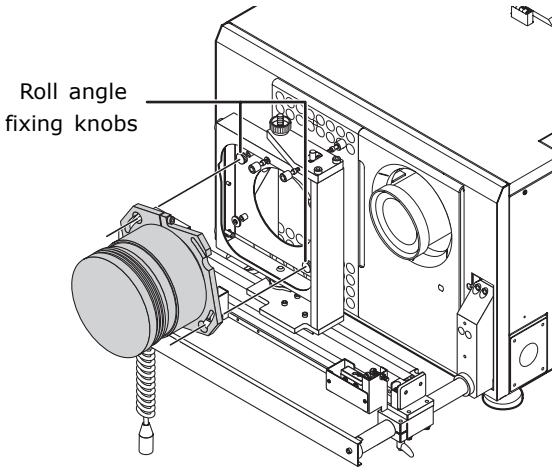

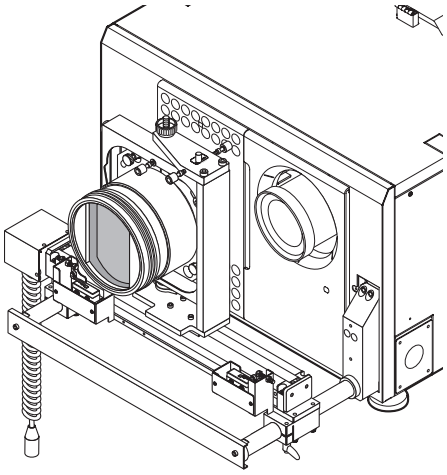

[4] Insert the power supply/ control connector into the projector side connector.

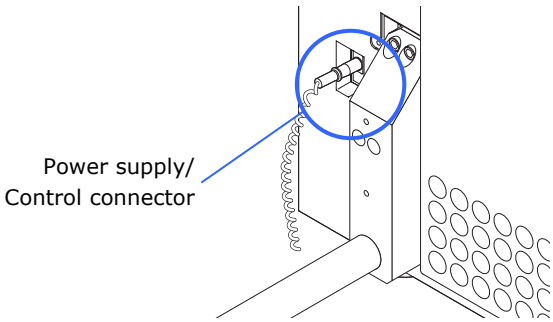

This completes the mounting of the anamo-lens in case of the stand NC-AT02. Adjust the anamo-lens after completion of the primary lens adjustment. For details, refer to "3.8 Adjusting the Anamorphic Lens and Wide Converter Lens" (Page 97).

2.7 Installation of Small Iris

If it is requested by the customer to reduce the projector's lamp luminance because it is too bright even when set to the minimum level, you may reduce it as follows. This operation will also improve the contrast ratio.

Preparatory operation:

- Make sure that the main power switch of the customer's projector is turned off.
- Get the supplied small iris ready. (Included in the standard set of accessories)

Installation step

[1] Unlock the lens side cover.

Refer to "1.5.3 Mounting and removing the lens side cover " (page 32) for details.

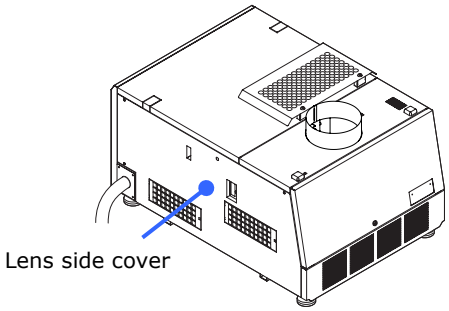

[2] Move the reserve tank.

Remove the fixing tabs (4 pieces) by pulling them towards the outside, and move the reserve tank to the right.

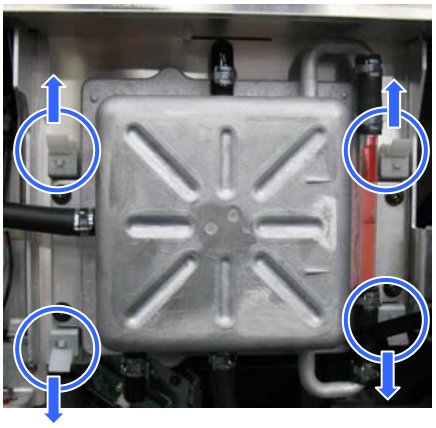

While attaching the small iris, affix the top left of the reserve tank using the tab and support the bottom left on the fixing lug.

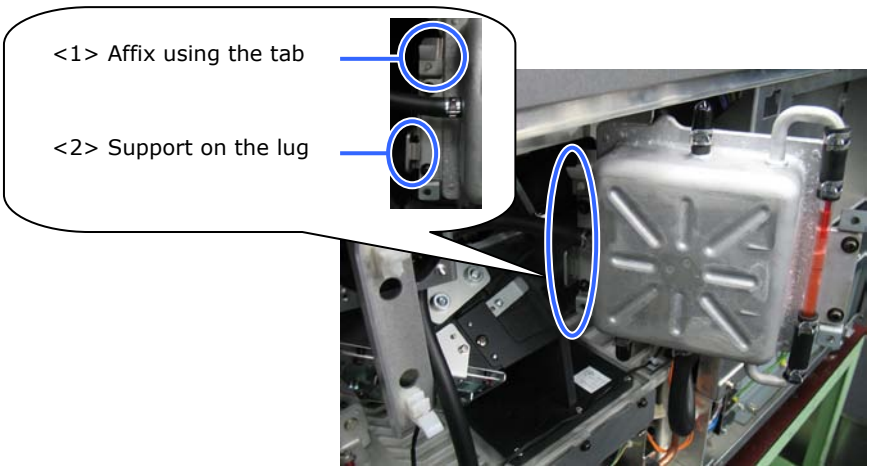

Note
- Take care that you do not bend the connected pipes when you move the reserve tank.

[3] Remove the engine plate from the engine section.

Remove the single screw, then remove the engine plate.

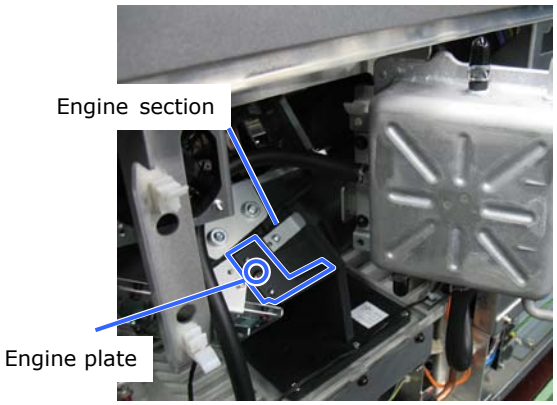

[4] Install the small iris.

Insert the attached small iris.

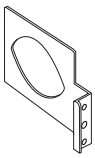

(Small iris)

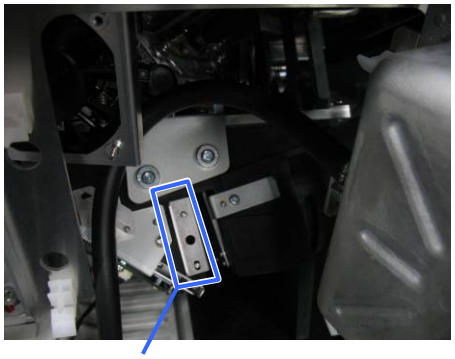

Small iris

[5] Install the engine plate in the engine section.

Install the engine plate removed in step [3], then fasten with the single screw.

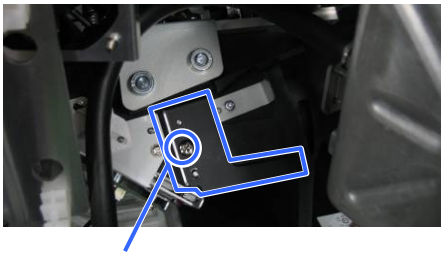

Engine plate

[6] Return the reserve tank to its original position.

To remove the reserve tank, use the following procedure.

<1> Shift the reserve tank to the right and remove it from the fixing lug.

<2> Pull out towards the outside and remove the tab that is fixing the top left of the reserve tank.

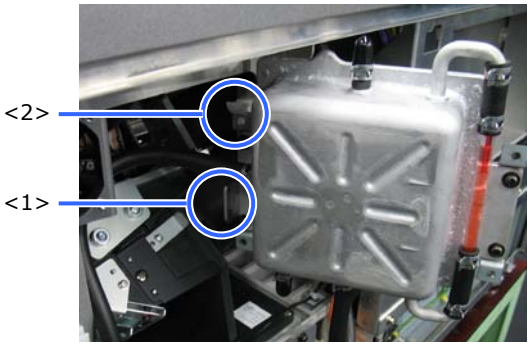

[7] Mount the lens side cover.

This completes the Installation of the Small Iris.

2.8 Mounting the exhaust equipment

It is necessary to connect the air outlet of the projector to the exhaust equipment. The accessory protective sheet should also be mounted because the area around the air outlet can become very hot.
If you use NC1200C, a rear exhaust duct (sold separately: NC-12RD01) is required to exhaust from the rear side. Ask your distributor for details on purchasing the rear exhaust duct.

[1] Mount an exhaust hose to the air outlet.

Mount the hose for connection to the exhaust equipment to the air outlet.

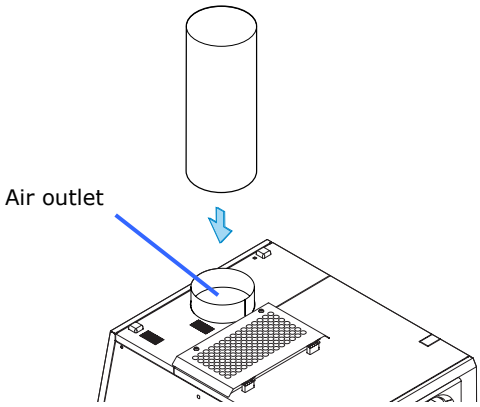

[2] Wrap the protective sheet around the exhaust hose.

Wrap the protective sheet to cover the connection of the air outlet and hose.

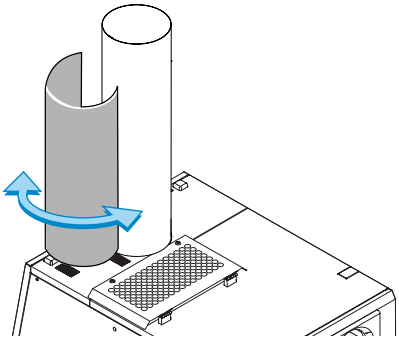

[3] Use the accessory protective sheet bands (4 bands) to fasten the protective sheet.

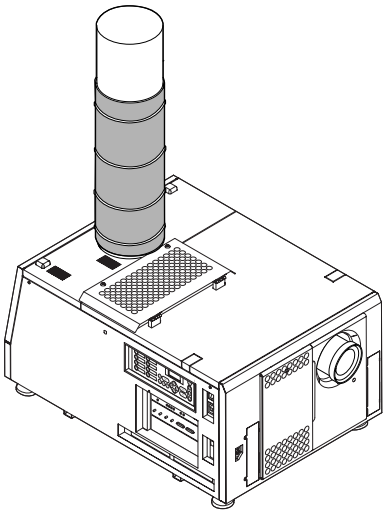

2.9 Montage der Entlüftungsanlage

Es ist erforderlich, den Luftauslass des Projektors an eine Entlüftungsanlage anzuschließen. Die als Zubehör erhältliche Schutzfolie muss ebenfalls angebracht werden, da der Bereich um den Luftauslass sehr heiß werden kann.
Wenn Sie den NC1200C verwenden, ist ein rückwärtiger Abluftkanal (Option: NC-12RD01) erforderlich, um Luft von der Rückseite abzuleiten. Fragen Sie Ihren Lieferanten bezüglich des Kaufs des rückwärtigen Abluftkanals.

[1] Befestigen Sie einen Entlüftungsschlauch am Luftauslass.

Befestigen Sie den Verbindungsschlauch an der Entlüftungsanlage und am Luftauslass.

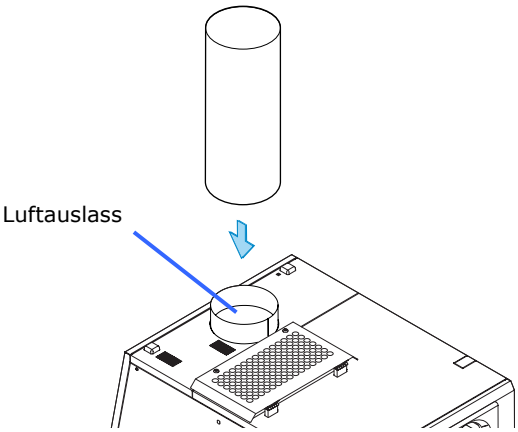

[2] Wickeln Sie die Schutzfolie um den Entlüftungsschlauch.

Wickeln Sie die Schutzfolie so um den Schlauch, dass die Verbindung zwischen Luftauslass und Schlauch bedeckt ist.

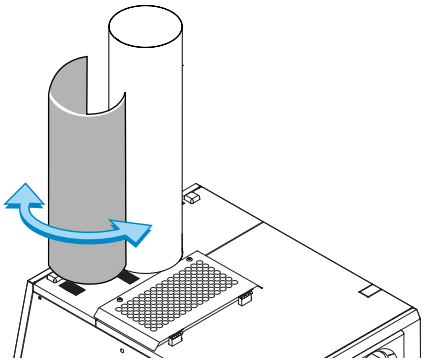

[3] Verwenden Sie die als Zubehör erhältlichen Befestigungsbänder für die Auslass-Schutzfolie (4 Stück), um die Schutzfolie zu befestigen.

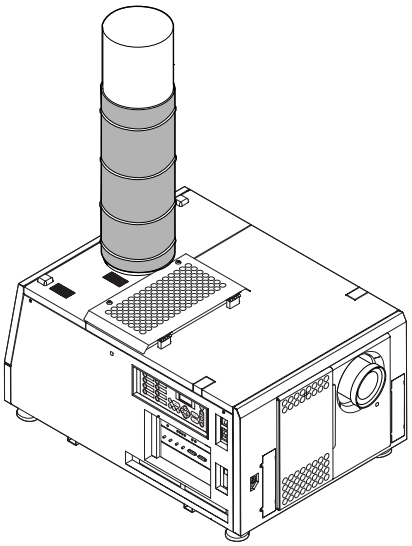

2.10 Mounting the lamp bulb

Mount the lamp bulb to the projector here. Ask a service personnel to mount the lamp bulb. It is necessary to adjust the lamp bulb shaft for mounting and replacement of the lamp bulb. For the adjustment procedures, refer to "3.6 Adjusting the lamp bulb shaft" (Page 90).

⚠Caution	• It is concerned that the lamp bulb would burst under shock or vibration. Make sure to move the projector to the installation position before mounting the bulb. In addition, make sure to remove the lamp bulb before moving the projector to another place.

3.

Projector Adjustment and Connecting

3.1 Flow of Adjustment and Connecting

Adjustment and Connecting of the projector accord to the procedure below.

- Step 1
Turning your projector on (See page 83)
- Step 2
Setting the date and time in the projector (See page 88)
- Step 3
Setting the projector projection method (See page 89)
- Step 4
Adjusting the lamp bulb shaft (See page 90)
- Step 5
Adjusting the primary lens (See page 93)
Display the test pattern to adjust the screen size, screen ratio and focus.
- Step 6
Adjusting the anamorphic lens (See page 97)
- Step 7
Connecting the image input (See page 106)
- Step 8
Connecting the various control terminal (See page 107)

This chapter explains the adjustment and connection of the projector with Steps 1 to 8.
Steps 1 to 8 complete the adjustment and connection of the projector. Next, use Digital Cinema Communicator (DCC) to setup various settings such as color adjustment. Refer to the "Digital Cinema Communicator Installation Manual" for the procedure.

3.2 Recovering from Tamper Errors

The signal input board that is fitted as standard in the projector has a built-in tamper detection circuit.
If any of the following actions is performed while the signal input board is fitted in the projector, an error message is displayed on the LCD screen of the main unit control panel.

Action	Error code	Error message
Cover removed	177	Tamper Fail
- Front cover - Side cover - Lens side cover	486	Service Door Open
Slot A device or blocking panel removed	178	Marriage Tamper Fail
- Blocking panel	482	Physical Marriage Tamper
- Option board - Multi media switcher	484	Marriage Not Active

Tips
- Error codes can be checked when using the Digital Cinema Communicator (DCC).

While the above error messages are being displayed, video input to the HDSDI input port is prevented from being displayed by the security function. Refer to "3.2.1 Procedure for recovering from tamper errors" (page 84) for details on how to recover from tamper errors.

3.2.1 Procedure for recovering from tamper errors

When a tamper error is displayed, recover by using the following procedure.

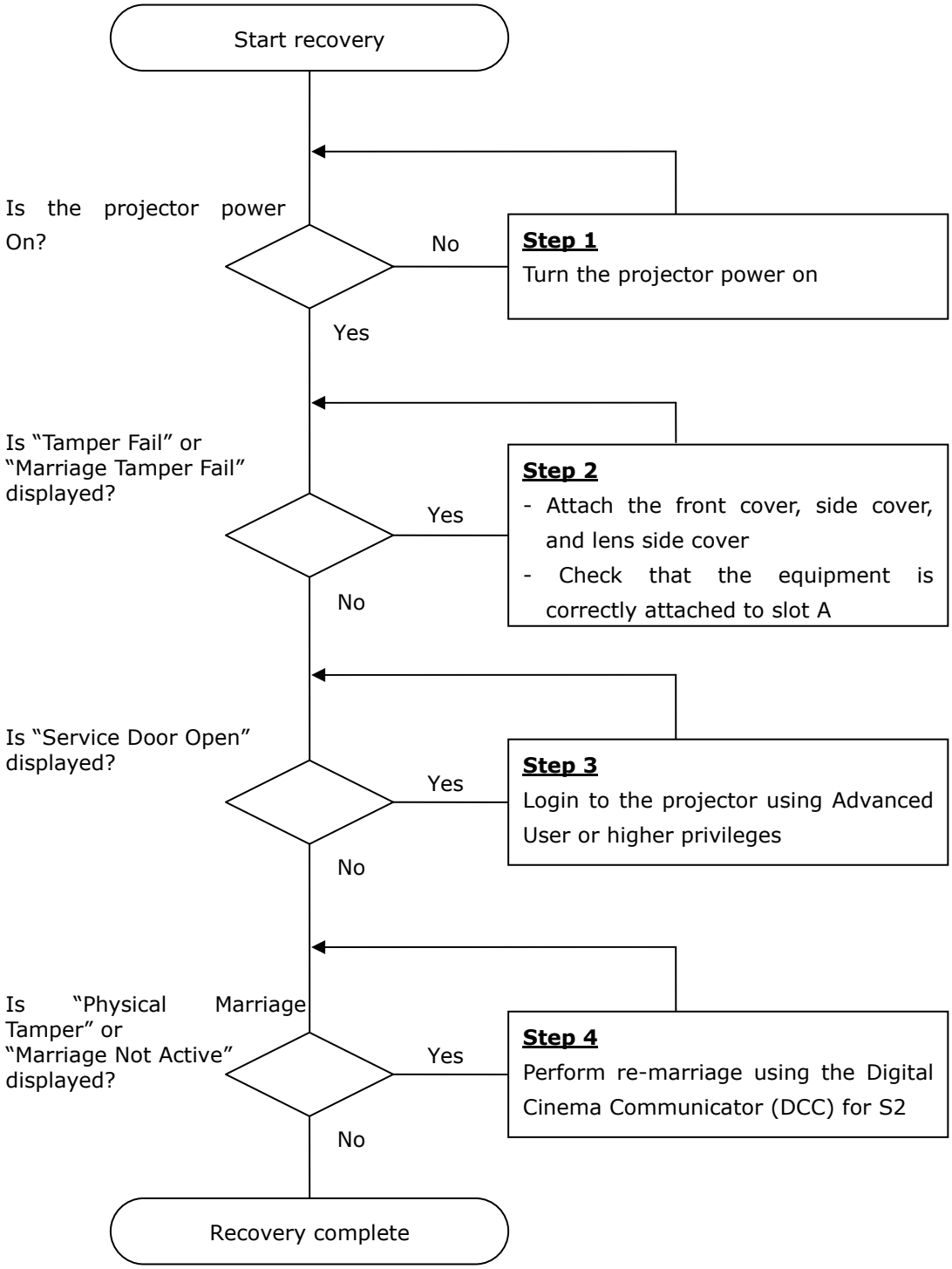

- Step 1

"Turn the projector power on"

Refer to "3.3 Turning your projector on" (page 86) for details on how to turn on the projector.

When the covers and slot A are correctly fitted, "Tamper Fail" and "Marriage Tamper Fail" are cleared.

- Step 2

"Attach the front cover, side cover, and lens side cover"

If you have removed a cover, then attach the cover. Furthermore, if the covers are attached, check that they are attached correctly.

When the covers are attached, "Tamper Fail" is cleared.

"Check that the equipment is correctly attached to slot A"

If there are no devices mounted in slot A, attach the blocking panel. Also, if a device is mounted in slot A, check that it is securely pushed all the way into the slot.

When the device is mounted correctly in slot A, "Marriage Tamper Fail" is cleared.

- Step3

"Login to the projector using Advanced User or higher privileges"

Refer to "4.1.1 When you use the service personnel menu" (page 110) for details on logging into the projector using Advanced User or higher privileges.

Once you login, "Service Door Open" is cleared.

- Step 4

"Perform Re-Marriage using the Digital Cinema Communicator (DCC) for S2"

DCC is used to perform re-marriage. Refer to "Digital Cinema Communicator for S2 Installation Manual" for details.

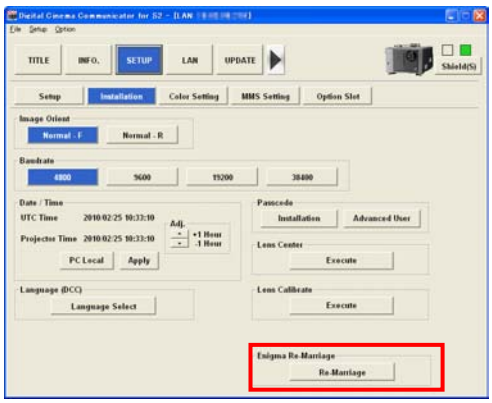

3.3 Turning your projector on

Note

- The lamp power switch on the right side of the control panel should always be used in the "on" state except when the lamp power supply is cut in an emergency due to an abnormality. If AC power is supplied to the projector main unit while the lamp power switch is "off", an LPSU Fail occurs and a buzzer rings continuously.

[1] Turn on the lamp power switch.

Turn the lamp power switch on the right side of the projector control panel on.

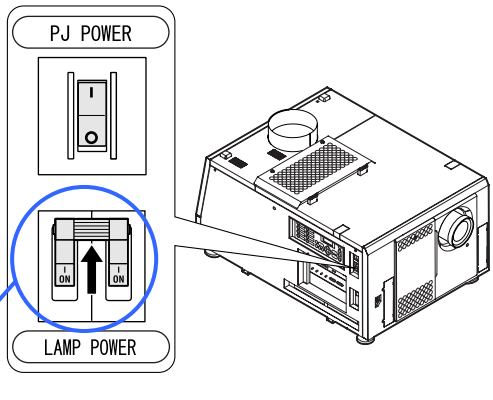

Lamp power switch;
This should normally be left on (used to turn off the lamp in an emergency when there is a malfunction).

[2] Turn on the external AC breaker for the lamp power supply.

Turn on the external AC breaker for the lamp power supply that is connected to the projector.

[3] Turn on the external AC breaker for the main unit.

Turn on the external AC breaker for the main unit that is connected to the projector.

[4] Turn on the projector power switch.

A buzzer will ring on the projector. The POWER button will blink green and the Rear STATUS indicator will light orange (standby state). KEY LOCK becomes automatically on if no control panel operation takes place in the standby state for 30 seconds by default. Buttons on the control panel do not function while KEY LOCK is on.

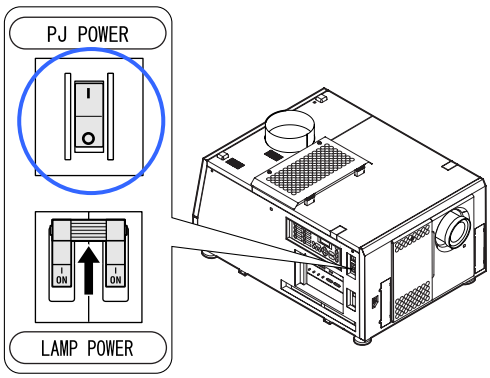

[5] If KEY LOCK is on, press the KEY LOCK button for one second or longer.

KEY LOCK becomes off. The color of the KEY LOCK button changes from orange to white, and buttons on the control panel become operable.

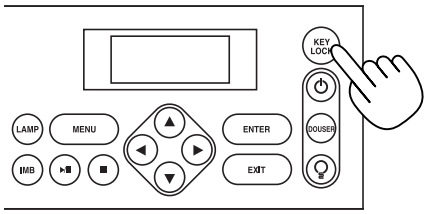

[6] Press the POWER button on the control panel of your projector three seconds or longer.

Your projector is turn on, and the screen glows light about 30 seconds later. The POWER button lights green.

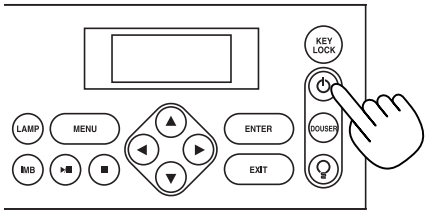

[7] Press the LAMP ON/OFF button on the control panel for five seconds or longer.

The lamp is turned on and the screen glows light about 15 seconds later. The LAMP ON/OFF button lights green. The douser is closed until the screen glows light (the DOUSER button blinks white). When the douser is open, the DOUSER button lights green.

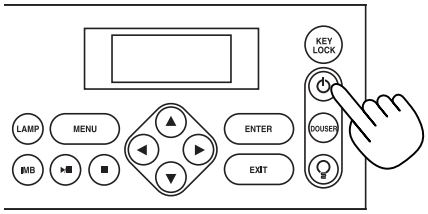

3.4 Setting the Date and Time in the Projector

The internal clock in the projector operates on coordinated universal time (UTC). You can set the internal projector time to the time in your region by setting the time difference between the standard time in your region and UTC.
If you are using DCC, you can easily set the date and time in the projector by reading the date and time settings of the computer where DCC is installed. Refer to "Digital Cinema Communicator for S2 Installation Manual" for details.

3.5 Setting the projector projection method

When the projector is shipped from the factory, the projection method is set to the front mode (projection from the front of the screen with the projector installed on the pedestal).
This procedure is described for the example of using the LCD screen of the projector main unit. Refer to the projector user's manual for details on how to use the main unit operating panel.

[1] Press the MENU button for three seconds or longer.

The Passcode input screen appears on the LCD screen at the projector's control panel.
Press the EXIT button to return to the original screen.

[2] Enter the passcode and press the ENTER button.

If you make a mistake during input, you can move the cursor by pressing the LEFT/RIGHT buttons and overwrite the passcode.
If the passcode is correct, you can use the service personnel menu.

[3] Press the LEFT/RIGHT button to display "Configuration" and press the DOWN button.

[4] Press the LEFT/RIGHT button to display "Installation" and press the DOWN button.

[5] Check that "Image Orient" is properly selected and press the DOWN button.

If "Image Orient" is not properly selected, press the LEFT/RIGHT buttons to select it

[6] Press the LEFT/RIGHT buttons to select the projection method (Image Orientation).

When shipped from the factory, it is set to [Normal-F].

- Normal-F: Front projection. With the projector installed on the pedestal, projection is executed from the front of the screen.
- Normal-R: Rear projection. With the projector installed on the pedestal, projection is executed from the back of the screen.

[7] Press the ENTER button.

An (*) will be put on the selected projection method (Image Orientation).

[8] Press the EXIT button several times.

The projector exits the menu and goes back to the regular screen.
If you press the EXIT button and then select "Yes" and press the ENTER button on a regular screen, you are returned to user mode.

3.6 Adjusting the lamp bulb shaft

It is necessary to adjust the lamp bulb shaft for mounting and replacement of the lamp bulb.

Preparation:
Adjustment should be made with the projection status. Turn on the projector and the lamp power supply unit. In addition, prepare gloves, a Phillips head screwdriver and hexagonal wrench (5 mm).

Note

- When you are adjusting the lamp bulb shaft (X-axis, Y-axis, or Z-axis), do not forcefully rotate the screws once they no longer rotate. Doing so may cause the adjustment function to break.

[1] Remove the bulb adjustment panel at the rear of the projector.

Loosen two screws until their rotations become idle and remove the bulb adjustment panel.

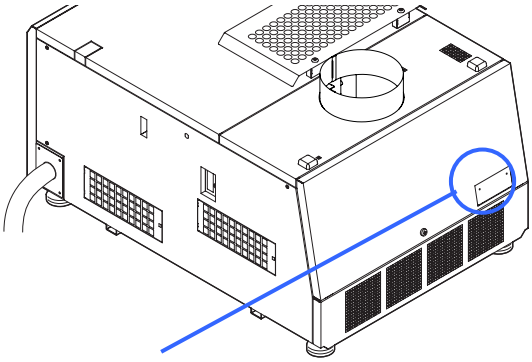

Bulb adjustment panel

[2] Enable the service personnel menu.

These settings are for our service personnel and cannot normally be used (user mode). You need to enter a passcode to enable the service personnel menu. Refer to the "4.1.1 When you use the service personnel menu" (page 110) for the procedure.

[3] Call "Bulb Alignment" from the menu.

From the LCD menu of the projector (Configuration > Installation > Bulb Alignment), call the "Bulb Alignment" screen.

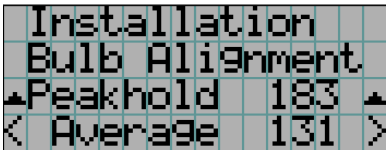

[4] Adjust the Z-axis adjustment screw to have the maximum bulb alignment.

With rotating the adjustment screw using a 5-mm hexagonal wrench, set the Peak hold value in the "Bulb Alignment" screen to the maximum. Average shows the average value in the adjustment.

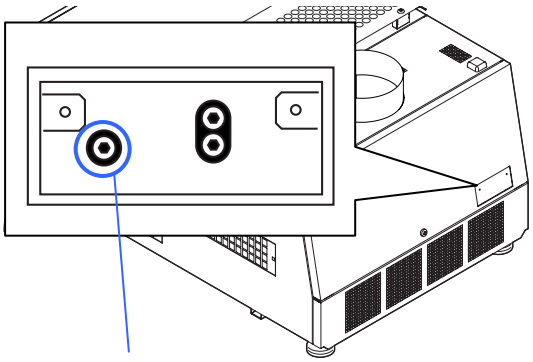

Z-axis adjustment screw

[5] Adjust the X-axis adjustment screw to have the maximum bulb alignment.

With rotating the adjustment screw using a 5-mm hexagonal wrench, set the Peak hold value in the "Bulb Alignment" screen to the maximum. Average shows the average value in the adjustment.

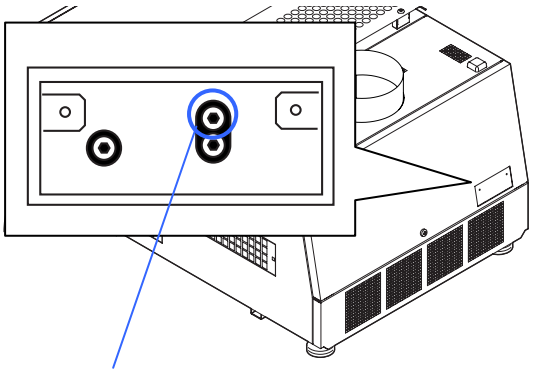

X-axis adjustment screw

[6] Adjust the Y-axis adjustment screw to have the maximum bulb alignment.

With rotating the adjustment screw using a 5-mm hexagonal wrench, set the Peak hold value in the "Bulb Alignment" screen to the maximum. Average shows the average value in the adjustment.

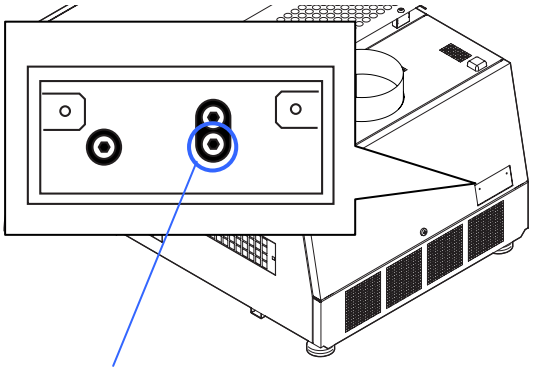

Y-axis adjustment screw

[7] Mount the bulb adjustment panel at the rear of the projector.

Loosen two screws to mount the bulb adjustment panel.

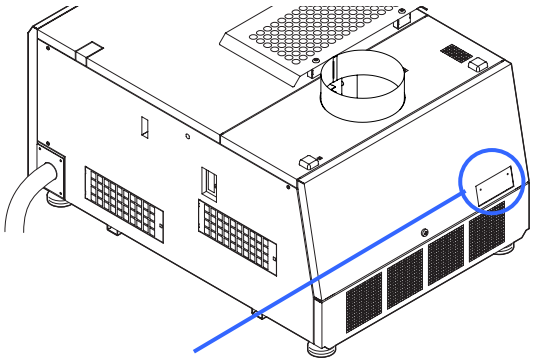

This completes the adjustment of the lamp bulb shaft.

3.7 Adjusting the primary lens

Carry out lens calibration according to the following procedure after installing the primary lens. After that, display the test patterns, and adjust the screen size, focus, and screen position with the primary lens.

Note

- When the primary lens is replaced, do not use the existing lens memory. In that case, delete the existing lens memory, and use the newly registered lens memory.

3.7.1 Carry out Lens Calibration

[1] Confirm that the primary lens has been mounted correctly.

[2] Press the MENU button.

"Title Select" is displayed on the LCD screen at the projector's control panel.

[3] Press the LEFT/RIGHT buttons to select "Configuration".

[4] Press the DOWN button.

[5] Press the LEFT/RIGHT buttons to select "Installation".

[6] Press the DOWN button.

[7] Press the LEFT/RIGHT buttons to select "Lens Calibrate".

[8] Press the DOWN button.

[9] When "Execute" appears on the display, press the ENTER button.
When "Yes" appears on the display, press the ENTER button.

Carry out calibration in the order of focusing lens and zoom lens. It takes about two minutes at the most until the calibration ends.

3.7.2 Display the test pattern

[1] Press the MENU button.

"Title Select" is displayed on the LCD screen at the projector's control panel.

[2] Press the DOWN button.

[3] Press the LEFT/RIGHT buttons to select "TEST Pattern".

[4] Press the DOWN button.

[5] Press the LEFT/RIGHT buttons to select "RGB-CROSS".

[6] Press the ENTER button.

An (*) will be put on the selected test pattern.

3.7.3 Adjusting the screen ratio

Adjust the screen ratio of the primary lens here.
Adjust the screen ratio of the anamorphic lens after adjusting the primary lens screen ratio and mounting the anamorphic lens.
When an anamorphic lens is used, distortions will be produced on the projection screen. To prevent the image from being cut off due to these distortions, the image size should be made larger than the screen size beforehand.
To minimize potential distortions of the anamorphic lens, it is recommended that the lens shift not be used as much as you can and that projection be kept at lens center.

Memo

- How to Call the Lens Center
  [1]Press the MENU button on the projector's control panel.
  "Title Select" appears on the projector's LC display.
  [2]Select "Configuration" menu using LEFT the LEFT/RIGHT button.
  [3]Press the DOWN button.
  [4]Select "Installation" using the LEFT/RIGHT button.
  [5]Press the DOWN button.
  [6]Select "Lens Center" using the LEFT/RIGHT button.
  [7]Press the DOWN button.
  [8]When "Execute" appears on the display, press the ENTER button.
  The lens will begin to move.

Preparation: Display the zoom/focus adjustment screen by using the following procedure.

[1] Press the MENU button on the projector's control panel.
"Title Select" appears on the projector's LC display.

[2] Select "Configuration" menu using LEFT the LEFT/RIGHT button.

[3] Press the DOWN button.

[4] Select "Lens Control" using the LEFT/RIGHT button.

[5] Press the DOWN button.

[6] Press the ENTER button.
"Focus Zoom" is displayed and you can adjust the focus/zoom.

[1] Press the LEFT/RIGHT buttons to roughly adjust the screen size so that the screen height and the image height are the same.

[2] Press the UP/DOWN buttons to roughly adjust the focus.

[3] Adjust the surface on which the projector is set up and the tilt foot of the projector to adjust the setup position, height, and tile (front-back and left right) of the projector so that the projected image is level at the screen center.

[4] Use the LEFT/RIGHT buttons again to adjust the screen size so that the projected image is kept 0.5 to 1 crosshatch cell portions higher than the top edge of the screen.

[5] Finally adjust the focus using the UP/DOWN buttons.

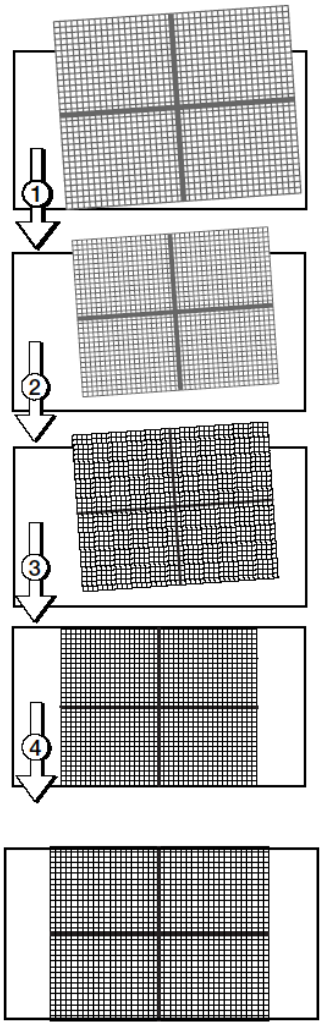

[6] Press the EXIT button several times.

The projector exits the menu and goes back to the regular screen.

Note

- If you use the lens memory for adjustment of the focus, first move the DOWM key (Focus Down) almost to the limit and then make adjustments so that you can finish the adjustment on the UP key (Focus Up side).

3.8 Adjusting the Anamorphic Lens and Wide Converter Lens

Here, you will adjust the positions (vertical and horizontal positions and depth) of the anamorphic lens or wide converter lens, and its rotation, tilt/pan angles and focusing as well.
Adjust the anamorphic lens position so that it becomes parallel with the primary lens in horizontal and vertical directions. In addition, rotate the lens to adjust it so that the projection screen enlarged by the anamorphic lens becomes horizontal. This section describes how to adjust the anamorphic lens. If you are using the wide converter lens, please read anamorphic lens as wide converter lens.

Indication of Adjustment Directions

In this section, the moving direction and the rotation angle are indicated as shown below.

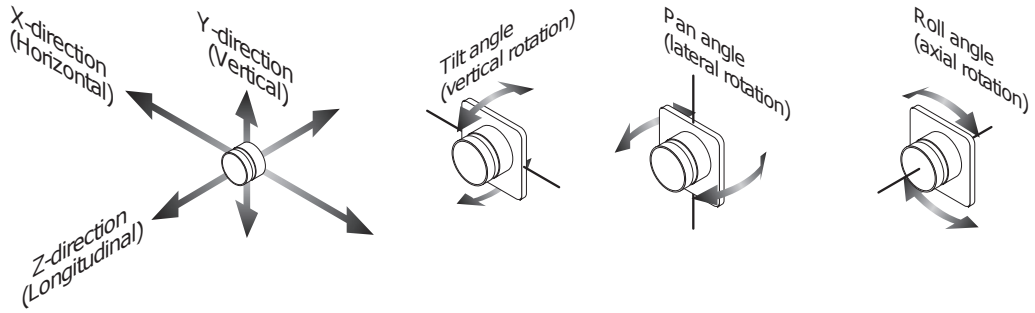

3.8.1 Z-direction adjustment

Move the anamorphic lens in the Z-direction and adjust it so that the distance between the primary lens and the anamorphic lens becomes as small as possible.

[1] Loosen the two Z-direction fixing levers.
[2] Hold the slide unit with both hands and slide it manually.
[3] After adjusting, tighten the two Z-direction fixing levers to fasten.

Note
- Check that the slide unit does not touch the primary lens.

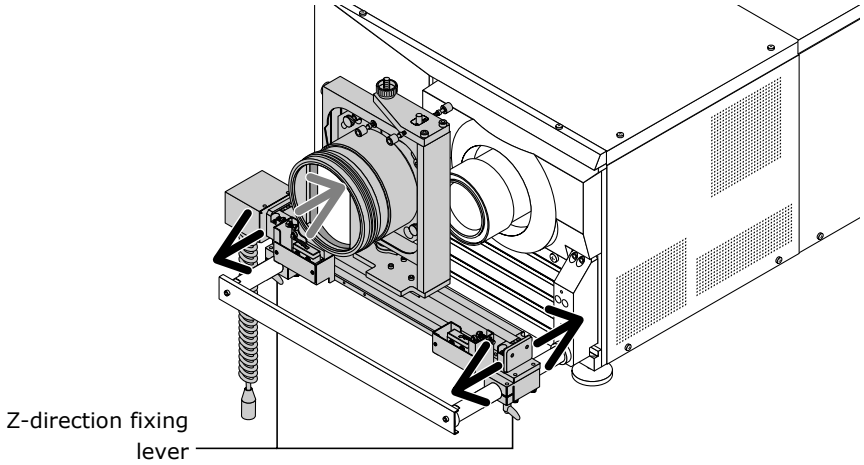

When using the wide converter lens, adjust the spacing from the primary lens using the values in the following table as a guide.

Primary lens	Spacing (mm)
NC-60LS13Z	29 to 34.5
NC-60LS14Z	25 to 33
NC-60LS16Z	10 to 18
NC-60LS19Z	6
NC-60LS24Z	20
NC-60LS39Z	20

3.8.2 X-direction adjustment

For the X-direction, the anamorphic lens is set (on) and reset (off) electrically. For this reason it is necessary to properly adjust the sensor position for the set position.

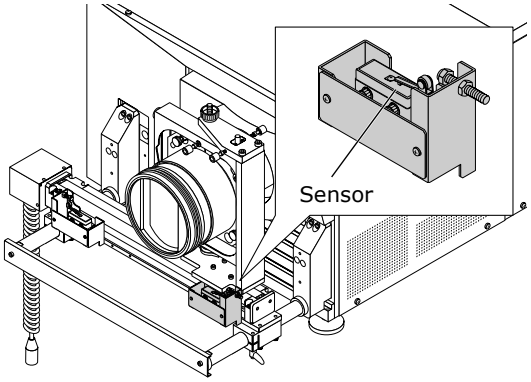

Caution	• Pay attention not to have the finger caught by the movable section in adjustment.

Note

- Make the X-direction adjustment with the power supply/control connector disconnected.

Tips

- It is not possible to adjust in the X-direction electrically.

Anamorphic lens set position adjustment

[1] Loosen the two M4 screws fixing sensor (R), then slide in the direction of arrow A.

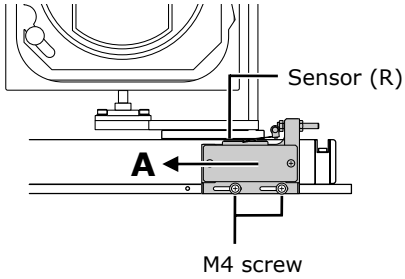

[2] Line up the top of the slide unit with the projector side lens position.

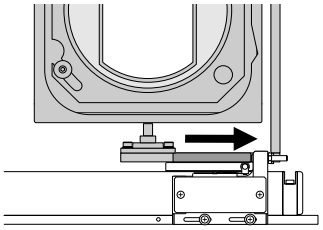

[3] Slide sensor (R) in the direction of arrow B and fasten it in the position where the sensor switches from “off” to “on” by tightening the two M4 screws.

* If necessary, use the auxiliary sensor adjusting holes.

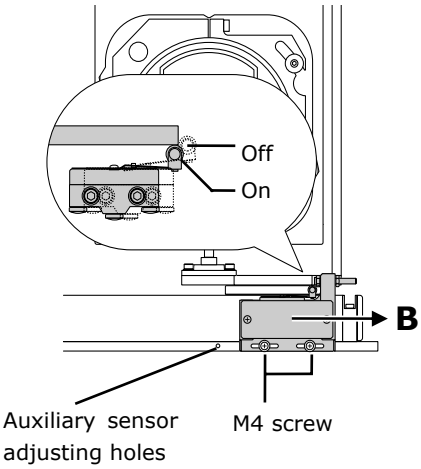

3.8.3 Y-direction adjustment

[1] Loosen pan angle adjusting screws (f) and (r) a little.

[2] Turn the Y-direction adjusting knob to adjust.

[3] After adjusting, tighten pan angle adjusting screws (f) and (r) to fasten.

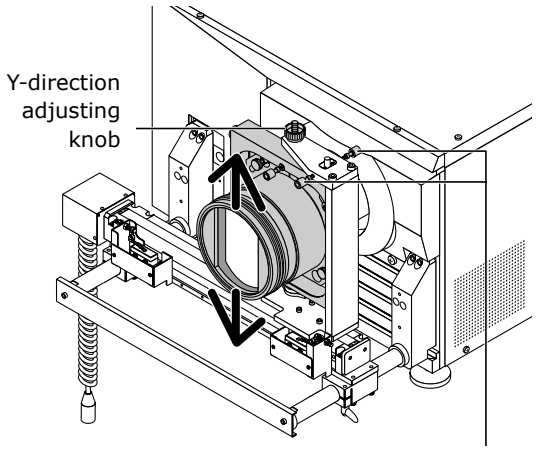

3.8.4 Adjusting the roll angle

Adjusting the roll angle is only performed when using the anamorphic lens. This adjustment is not required when using the wide converter lens.

Rotate the anamorphic lens so that the vertical lines and the horizontal lines at the center of the image projected to the screen become horizontal and vertical.

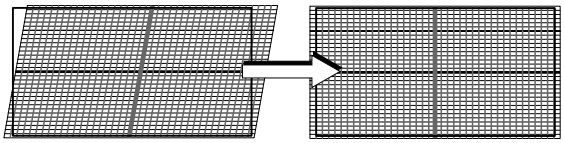

[1] Loosen the two roll angle fixing knobs.

[2] Grasp the anamorphic lens firmly by hand and turn it along the guide to adjust.

[3] After adjusting, tighten the two roll angle fixing knobs to fasten.

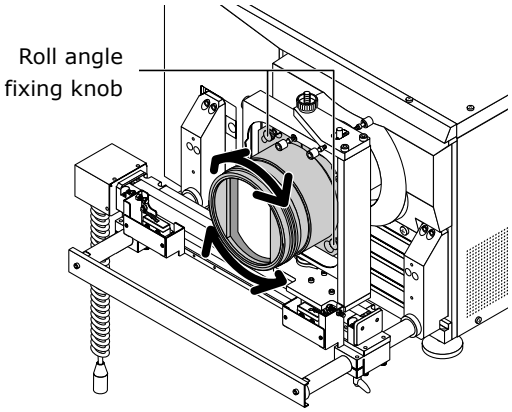

Note

- Be careful not to turn too far counterclockwise or the lens holder will come off.

3.8.5 Adjusting the tilt angle

Adjust the tilt angle so that the distortions at the top and the bottom of the image become equivalent.

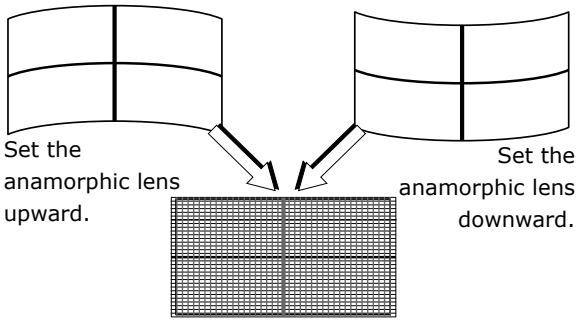

Note

- When you adjust the tilt angle, pay attention so that the anamorphic lens does not contact the primary lens. If the anamorphic lens is touch the primary lens, repeat the steps in "3.8.1 Z-direction adjustment" (Page 98).

[1] Loosen the two tilt angle fixing knobs.

[2] Loosen the tilt angle adjusting screw to adjust in the C-direction, tighten it to adjust in the D-direction.

[3] After adjusting, tighten the two tilt angle fixing knobs to fasten.

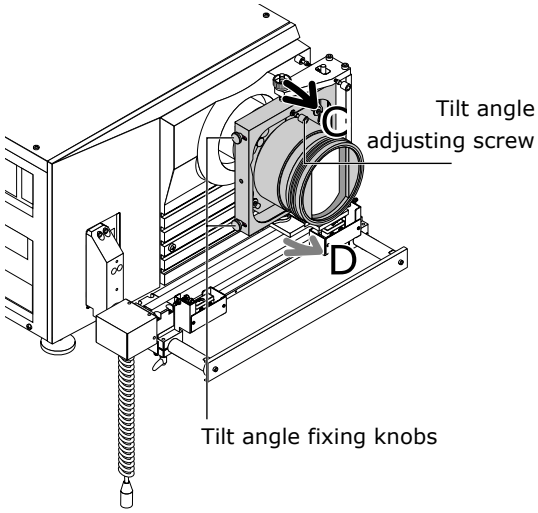

3.8.6 Adjusting the pan angle

Adjust the pan angle so that the heights on the right and left of the image become equivalent.

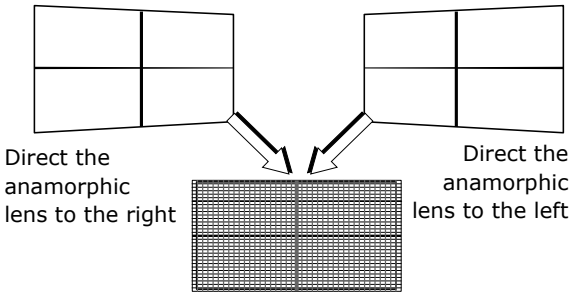

[1] Loosen the two pan angle adjusting screws (f) and (r).

[2] Tighten pan angle adjusting screw (f) to adjust in the E-direction, tighten pan angle adjusting screw (r) to adjust in the F-direction.

[3] After adjusting, tighten the pan angle adjusting screw on the side opposite the one adjusted in step <2> to fasten.

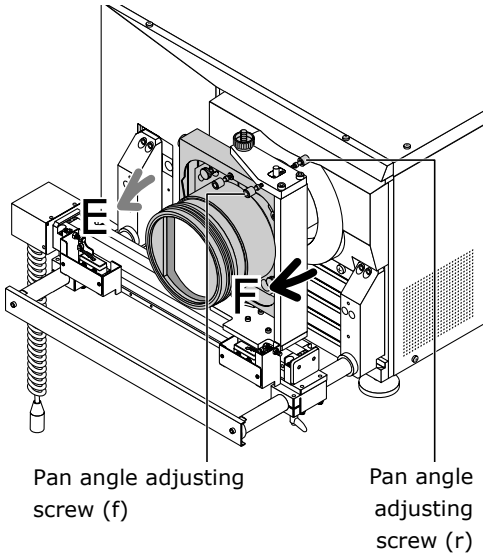

3.8.7 Adjusting the Focus

Adjusting the focus is only performed when using the wide converter lens. This adjustment is not required when using the anamorphic lens.

[1] Loosen the tab of the wide converter lens and adjust by rotating it along the guide.

[2] After making the adjustment, tighten the tab to fasten it.

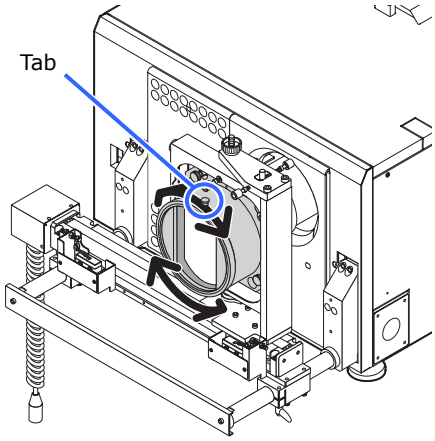

Note

- If you are unable to adjust the focus, change the spacing from the primary lens. Refer to "3.8.1 Z-direction adjustment" (Page 98) for details.

3.8.8 Checking the Adjustment Results

This completes the adjustment of the anamorphic lens. Check that the projected image is substantially at the center of the anamorphic lens and that four corners of the projected image are not eliminated by the anamorphic lens (check whether the image has a notch or not).

If the image is not fully given, repeat the steps in "3.8 Adjusting the Anamorphic Lens and Wide Converter Lens" (Page 97).

3.9 Connecting the image input

Your projector has two image input terminals (HDSDI input terminal and DVD-D input terminal).

HDSDI A/B input terminal (SDI A/SDI B/SDI-C/SDI-D)	Inputs serial digital images from a cinema server or image device such as HDSDI VTR.
DVI-D A/B input terminal (DVI A/DVI B)	Inputs digital RGB signals from a PC.

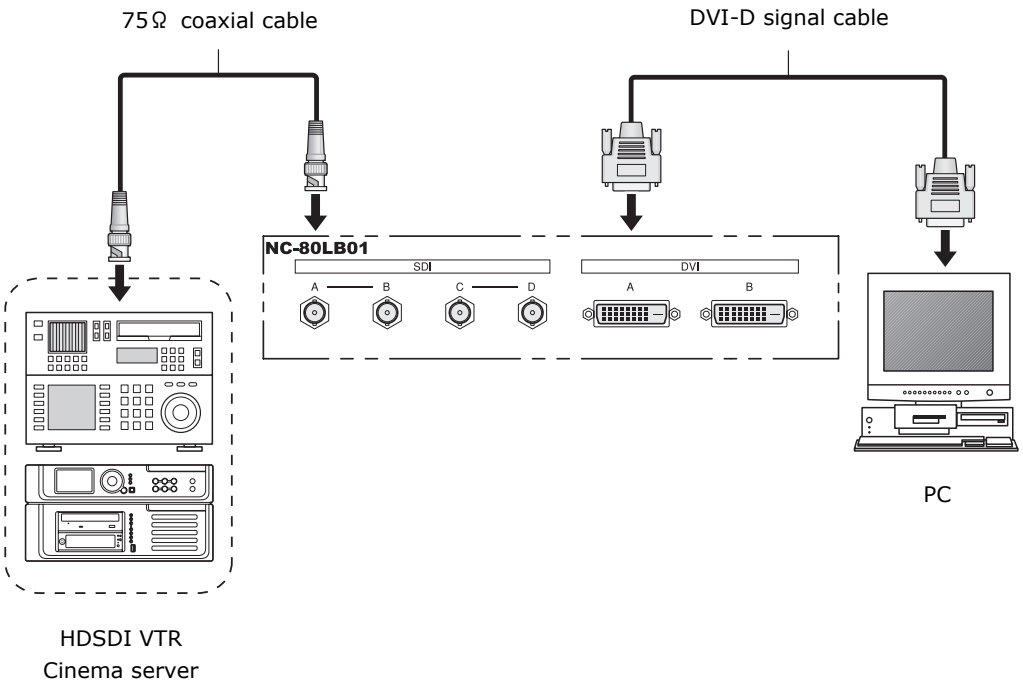

3.10 Connecting the various control terminal

For control, your projector comes with such ports as the PC control terminal and the Ethernet port (RJ-45).

PC control terminal (RS-232)	Use this terminal when controlling the projector in serial connection from a PC.
Ethernet port (LAN)	Use this port when controlling the projector in LAN connection from a PC or a cinema server.

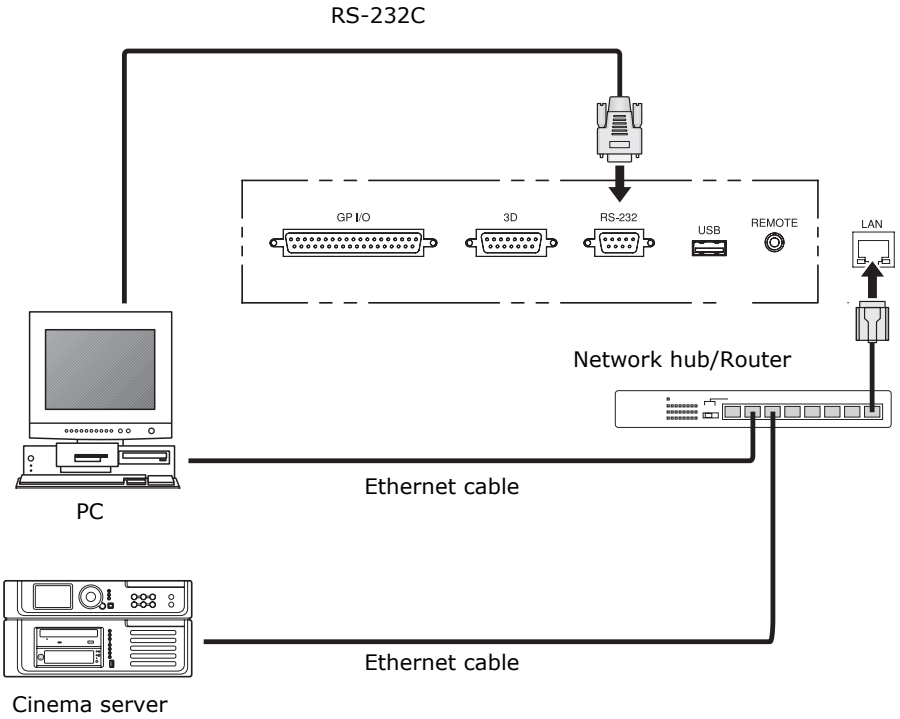

This completes the adjustment and connection of the projector. Next, set up the projector from the Digital Cinema Communicator (DCC) for S2. Refer to the "Digital Cinema Communicator for S2 Installation Manual" for the procedure.

4.

LCD Menu

This chapter describes the menus displayed in the LCD screen on the projector's control panel and their functions. For basic operations of menus, refer to the operation manual.

4.1 List of menu

Menus in parentheses are menus for our service personnel. Normally, these menus cannot be used.

Main menu	Submenu		Description	Ref. page
Title Select	"Title Memory name"		Selects the title of the signal to be projected.	111
	TEST Pattern		Selects the test pattern to be projected.	111
Configuration	Lamp Setup	Adjust	Adjusts lamp brightness.	112
		Feedback	Sets the lamp brightness constant mode that uses a brightness sensor.	
	Lens Control	Lens Position	Adjusts the position of the projected screen.	112
		Focus Zoom	Fine tunes the size and focus of the projected screen.	
	(Setup)	Douser Mode	Selects whether to use the douser (screen mute) when switching signals.	113
		PowerOn Douser	Sets whether the douser is opened or closed after the main unit is turned on.	
		Turret	Controls the turret mounted with an anamorphic lens.	
		Panel Key Lock	Locks the buttons on the projector's control panel so that they cannot be operated.	
		Auto Key Lock	Enables or disables Auto Key Lock.	
		3D Connector	Sets the signal input terminal for a 3D image system (3D terminal or GP I/O terminal).	
		FactoryDefault	Returns the settings to their default values. Selects between preset buttons and titles only, LAN settings only and all settings.	
	(Installation)	Option Slot	Configures the device installed in slot A and slot B (only when the projector is standby mode).	117
		Image Orient	Selects the projection method (front/rear).	
		Lens Calibrate	Calibrate the Zoom and the Focus lens.	

Main menu	Submenu		Description	Ref. page
Configuration	(Installation)	Lens Center	Moves the lens shift position to the center.	117
		MMS Select	Selects whether or not to use the multi media switcher (MMS).	
		Baudrate	Sets the PC control connector (RS-232C) data transmission speed (bps).	
		Date/Time	Sets the date and time on the projector.	
		New Bulb	Resets the lamp bulb usage time and selects or edits new entries (only when the projector is in standby mode).	
		Bulb Warning	Sets the lamp bulb warning time (only when the projector is in standby mode).	
		New Lamp House	Resets the lamp house usage time, and makes settings or selects modes (only when the projector is in standby mode).	
		Bulb Alignment	Sets the lamp bulb alignment.	
		Usage Reset	Initializes the usage time of the fan and air filter.	
		NewRouterSetup	Sets the router with the default settings when the router built-in the projector had been replaced.	
		Security Key	Registers the certification file to USB memory. Do not use usually.	
	(Memory)	Lamp	Saves the current lamp setting.	122
		Lens	Saves the current lens setting.	
(Title Setup)	Preset Button	Preset Button 1-8	Sets the titles to be assigned to the preset button (<1> to <8> buttons).	123
Information	Lamp	Output	Displays the lamp output setting.	124
		Bulb Type [A]	Displays the registered name and the maximum/minimum current setting of the currently used lamp bulb.	
		Bulb Type [W]	Displays the registered name and the lamp rated output (kW) of the currently used lamp bulb.	
		Bulb Type [H]	Displays the registered name and the lamp bulb warning time (Bulb Warning Time) setting of the currently used lamp bulb.	
	Preset Button	Preset Button 1-8	Displays the titles assigned to the preset buttons (<1> to <8> buttons).	125
	Usage		Displays the usage times of the projector, lamp bulb, lamp house, bulb warning, fan, and air filter.	125
	Error Code		Displays the currently occurring error.	126
	Version	System	Displays the version of the projector head. (BIOS, Firmware, Data, Lens mount FW, and Serial No.)	126
		SIB	Displays the version of the signal input board.	
		IMB	Displays the version of the image media block.	
		MMS (Built-in)	Displays the version of the built-in multi-media switcher (MMS). (BIOS, Firmware, Data, FPGA, Configuration FPGA, and Serial No.)	
	IP Address	System	Displays the SYSTEM IP address.	128
	Option Status		Displays the link status of the device mounted in slot A and slot B, and the projector.	128

4.1.1 When you use the service personnel menu

To use the menu for service personnel, you need to input the passcode. This section describes how to display the passcode entry screen and how to enter the passcode. Refer to the Projector Manual for details on how to enter text.

[1] Press the MENU button for three seconds or longer.

The passcode input screen will be displayed on the LCD screen at the projector's control panel.
Press the EXIT button to return to the original screen.

[2] Enter the passcode and press the ENTER button.

If you make a mistake during input, you can move the cursor by pressing the LEFT/RIGHT buttons and overwrite the passcode.
If the passcode is correct, you can use the menu for service personnel.

4.2 Title Select

4.2.1 Title select (Title Memory)

Select the title of the signal to be projected.
You can register up to 99 titles. You can also assign registered titles to the preset button (<1> to <8> buttons) on the projector's control panel and call them up directly using those buttons.

← Displays the currently selected item with asterisk (*).

← Selects the title to be projected.

4.2.2 TEST Pattern

Selects the test pattern to be projected.

← Displays the currently selected item with asterisk (*).

← Selects the test pattern to be projected.

OFF, Alignment, Convergence, H-Ramp, RGB-Black, RGB-Blue, RGB-Green, RGB-Red, RGB-White, Y-Color Bars, YCbCr-Blue, YCbCr-Green, YCbCr-Red, YCbCr-White, RGB-CROSS, RGB-50%-White

4.3 Configuration

4.3.1 Lamp Setup

Adjust

Adjusts the lamp output (brightness). Control the output at 10W increments.

← Displays the lamp output (%) with regard to the setting.

← Adjusts the lamp brightness.

Note

- You cannot set the lamp output to below 70% (if you set it below 70% it is set to 70%).

Feedback

Sets the lamp brightness constant mode that uses a brightness sensor.

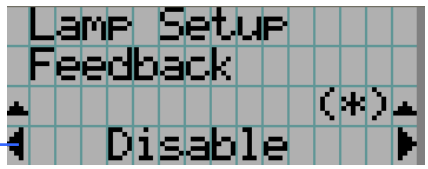

← Displays the currently selected item with asterisk (*).

← Displays the setting.

Disable	Disables the lamp brightness constant mode.
Enable	Enables the lamp brightness constant mode.

4.3.2 Lens Control

Adjust the position, size, and focus of the projected screen.

Press the ENTER button to switch the display between "Lens Position" and "Focus Zoom" adjustments. Press the EXIT button to return to a menu one level above.

Lens Position

Adjusts the position of the projected screen.

The projected screen moves in the selected direction as you press the UP/DOWN/LEFT/RIGHT button.

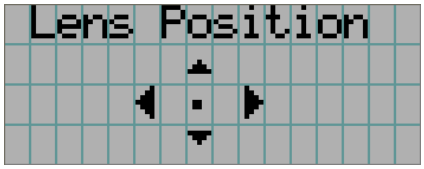

Focus Zoom

Fine tunes the size (Zoom) and focus (Focus) of the projected screen.
Press the UP/DOWN button to adjust the focus.
Press the LEFT/RIGHT button to adjust the size of the projected screen.

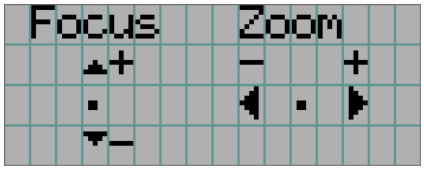

4.3.3 Setup

This menu is for service personnel. For the procedure to use it, refer to "4.1.1. When you use the service personnel menu" (page 110).

Douser Mode

The douser function will be activated when signals are switched. Request your dealer/distributor to perform the setting.

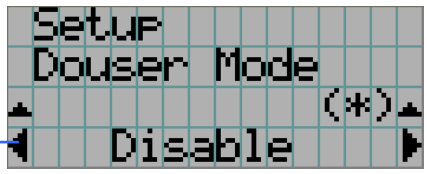

← Displays the currently selected item with asterisk (*).

← Displays the setting

Disable	Disables the douser mode.
Enable	Enables the douser mode.

PowerOn Douser

You can set whether the douser is opened or closed after the main unit is turned on.

← Displays the currently selected item with asterisk (*).

← Displays the setting

Close	Douser remains closed on coming out of Standby.
Open	Open douser on coming out of Standby.

Turret

Controls the turret on which the anamorphic lens is mounted.

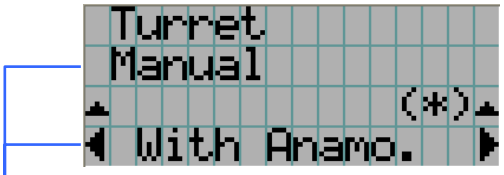

← Displays the control item

← Displays the currently selected item with asterisk (*).

← Displays the setting

Manual	Manually control the turret. - Without Anamo: Disables anamorphic lens. - With Anamo: Enables anamorphic lens.
Control	This sets whether or not the anamorphic lens selected for the title automatically switches when the title is switched. - Manual : Does not switch when the title is switched. - Auto : Switches automatically when the title is switched.
Ref. Select	Specify whether to enable or disable the anamorphic lens for the selected title. - Without Anamo: Disables anamorphic lens. - With Anamo: Enables anamorphic lens.

Panel Key Lock

The control buttons on your projector are locked to be inoperative.

← Displays the currently selected item with asterisk (*).

← Displays the setting

Lock	Enable a lock on the control buttons on your projector.
Unlock	Disable the lock on the control buttons.

Note

- When the buttons on the projector's control panel are locked, press the EXIT button on the projector for about 10 sec. to unlock them (The key lock setting on the projector becomes Unlock).

Auto Key Lock

Enables or disables Auto Key Lock.

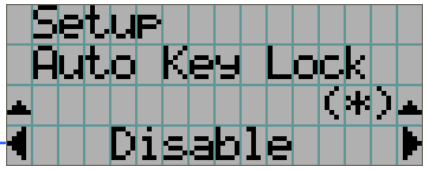

← Displays the currently selected item with asterisk (*).

← Displays the setting

Enable	Enables the auto key lock function. This applies the key lock automatically if you do not perform any operations from the main unit control panel for 30 seconds after entering the standby state. If you do not perform any operations for 30 seconds after releasing the key lock, the key lock is applied again.
Disable	Disables the auto key lock function. Although the key lock becomes active after entering the standby state, once you release the key lock it is not automatically applied.

3D Connector

Selects the port for 3D video systems used as the control signal input/output for the 3D video system.

If you select "Not Use", the GP I/O port is used as the control signal input/output for the 3D video system. If you select "Use", the 3D port is used as the signal input for the 3D video system.

← Displays the currently selected item with asterisk (*).

← Displays the setting

Not Use	Does not use the 3D port as the control signal input/output for the 3D video system (uses the GP I/O port).
Use	Uses the 3D port as the control signal input/output for the 3D video system.

FactoryDefault

Returns the projector main unit settings to the factory default state. You can choose from the following three types of methods.

- Registered preset buttons and title settings
- Network settings
- All adjustment and setting values

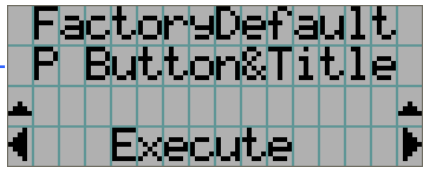

← Select the item to be reset.

← Press the ENTER button to execute resetting

P Button & Title	Resets the allocation of preset buttons and all registered titles.
LAN	Resets the network settings.
All	Resets all adjustment and setting values.

4.3.4 Installation

This menu is the service personnel menu. For the using service personnel menu, refer to "4.1.1. When you use the service personnel menu" (page 110).

Option Slot

Configures the devices mounted in slot A and slot B. This menu is active in standby mode only.

← Displays the currently selected item with asterisk (*).

← Displays the setting

IMB	Image media block (NC-80MB01)
MMS	Multi-media switcher (MM3000B)
No Board	No device mounted

Note

- The following settings are required when using the multi media switcher (MM3000B).
  - "Option Slot" in the Installation menu (this setting)
  - "MMS Select" in the Installation menu

Image Orient

Make a selection according to the setup position of your projector and screen.

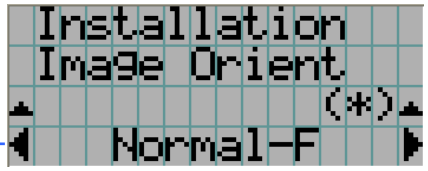

← Displays the currently selected item with asterisk (*).

← Displays the setting

Normal-F	Projection is made from front of the screen.
Normal-R	Projection is made from behind the screen

Lens Calibrate

Calibrate the Zoom and the Focus lens.

Execute this function whenever replacing the lens.

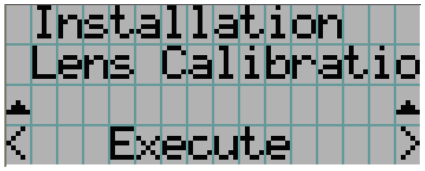

← Press the ENTER button to execute calibration.

Lens Center

To move the lens shift to the center position. The center position may slightly shift depending upon mounting conditions of the lens.

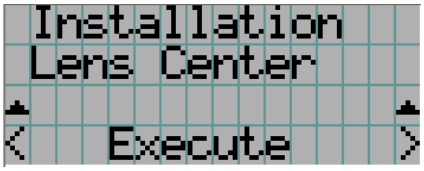

← Press the ENTER button to execute moving.

MMS Select

Select whether or not to use the multi-media switcher (MMS).

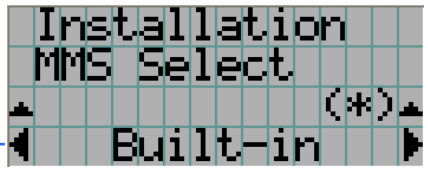

← Displays the currently selected item with asterisk (*).

← Displays the setting

Built-in	To use the incorporated MMS (optional: MM3000B)
Not Use	Not to use MMS

Note

- The following settings are required when using the multi-media switcher (MM3000B).
  - "Option Slot" in the Installation menu
  - "MMS Select" in the Installation menu (this setting)

Baudrate

To select the transmission speed (bps) for your projector (SYSTEM) and a PC when they are connected by a commercially available RS-232C straight cable. Select one from 4800, 9600, 192000 and 38400. Select the transfer speed corresponding to the speed of the connected devices.

← Displays the currently selected item with asterisk (*).

← Displays the setting

Date/Time

Use this to set the date and time on the projector.

The internal clock in the projector uses coordinated universal time (UTC). This sets the time difference between the standard time in your region and UTC.

←Select the item to be set

←Input numeric values

Press the LEFT/RIGHT button to change the time difference from the projector internal clock (UTC).

Tips

- If you are using Digital Cinema Communicator (DCC), you can set the date and time from your computer. Refer to "Digital Cinema Communicator Installation Manual" for details.

New Bulb

When the lamp bulb is replaced, reset the lamp time and select the lamp bulb type. Ask our service personnel to configure the setting when replacing the lamp bulb. This menu is active in standby mode only.

Bulb Warning

To set the time for display of lamp bulb warning. This menu is active in standby mode only.

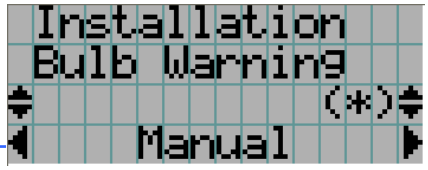

← Displays the currently selected item with asterisk (*).

← Displays the setting

Manual	Manually specify the warning time (H). Press the DOWN button to display the numeric input line (input the value using the buttons on projector's control panel).
Use Bulb Entry	Warning time set by Bulb Entry is used.

New Lamp house

When the lamp house is replaced, reset the lamp house time and select the lamp house. This menu is active in standby mode only.

← Displays the currently selected item with asterisk (*).

← Displays the setting

←Select the items for which the usage times are cleared.

← Displays the currently selected item with asterisk (*).

← Displays the setting

←Select the mode for lamp house usage time.

Single	To set the mode in which lamp house is not replaced (Single mode)
Multi	To set the mode in which the lamp houses are alternately replaced for use (Multi-mode). - Lamp house 1: To use the lamp house 1 - Lamp house 2: To use the lamp house 2

House	To set the mode in which lamp house is not replaced (Single mode)
House1	When multi-mode lamp 1 is used
House2	When multi-mode lamp 2 is used

Usage Clear	Reset the lamp house usage time.
Usage Mode	Set the mode for lamp house usage time.

Bulb Alignment

Use this for lamp bulb alignment adjustment.

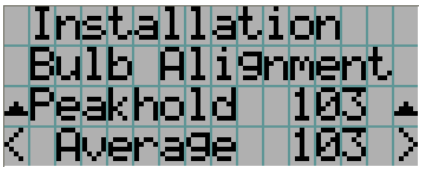

←Display the maximum value of the lamp light quantity input.

←Display the current input for lamp light quantity.

Usage Reset

Initializes the usage time of the fan and air filter.

← Select fan or air filter.

Fan Usage	Resets the fan usage time.
Filter Usage	Resets the air filter usage time.

(If you selected Fan Usage)

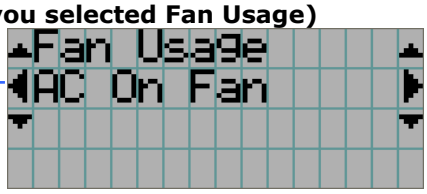

← Select the type of fan.

Select the type of fan then press the DOWN button. "Reset" is displayed.
If you press the DOWN button at this time, the usage time for the selected fan is reset.

AC On Fan	Resets the usage time of the projector cooling fan (Power On Fan). Fan 6 corresponds to the AC On Fan.
Power On Fan	Resets the usage time of the projector cooling fan (AC On Fan). Fan 0 to Fan 5 corresponds to Power On Fan.
Lamp Fan	Resets the usage time of the lamp cooling fan.
All	Resets the usage times for all of the fans.

(If you selected Filter Usage)

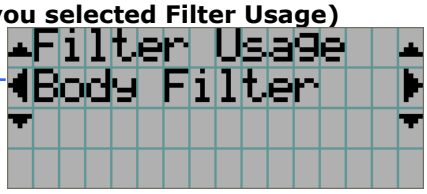

← Select the type of filter.

Select the type of air filter then press the DOWN button. "Reset" is displayed.
If you press the DOWN button at this time, the usage time for the selected air filter is reset.

Body Filter	Resets the usage time for the projector main unit air filter.
Lamp Filter	Resets the usage time for the lamp air filter.
All	Resets the usage times for all of the air filters.

NewRouterSetup

Sets the router with the default settings when the router built-in the projector had been replaced.

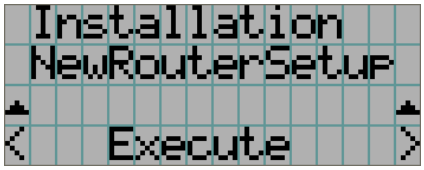

← Press the ENTER button to execute the setup.

4.3.5 Memory

This menu is the service personnel menu. For the using service personnel menu, refer to "4.1.1. When you use the service personnel menu" (Page 110).

Save the current status of lamp and lens to the memory in the projector (lens memory function and lamp memory function). The saved contents are assigned to the titles for use.

Memory is registered using Digital Cinema Communicator (DCC). Refer to the "Digital Cinema Communicator Installation Manual" for details.

← Select the saving item

← Display the registered memory name

Press the ENTER button to display the confirmation message asking you whether this memory can be overwritten or not.

Lamp	To save the current lamp status
Lens	To save the current lens status

4.4 Title Setup

This menu is the service personnel menu. For the using service personnel menu, refer to “4.1.1. When you use the service personnel menu” (Page 110).

4.4.1 Preset Button

Use this button to set the titles to be assigned to the preset buttons (<1> to <8> buttons). You cannot assign the same title to several preset buttons. If you want to assign any title to another number, cancel the assignment once and then set it to any button again.

← Select the preset button number (1 to 8)

← Display the selected number of the title

←Select the titles to be assigned to the preset buttons

Select the titles from those registered in advance.
To clear assignment to preset buttons, select “---“.

4.5 Information

Displays the hours of lamp bulb use, the version information and error codes.

4.5.1 Lamp

Displays information relating to the lamp. (Such as lamp output and the type of lamp bulb.)

Output

Displays the lamp brightness (output) setting.

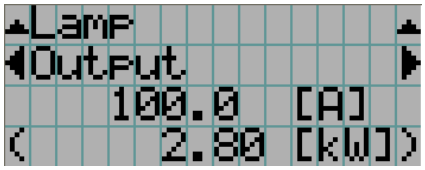

← Displays the set current (A).

← Displays the power consumption (kW).

Bulb Type [A]

Displays the hours of lamp bulb use, the version information and error codes.

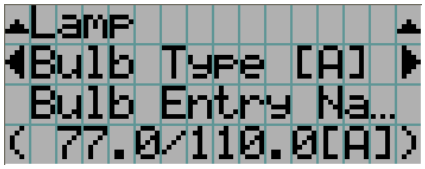

← Displays Bulb Entry registered name.

← Displays Bulb Entry maximum/minimum currents (A).

Bulb Type [W]

Displays the registered name and the lamp rated output (kW) of the currently used lamp bulb.

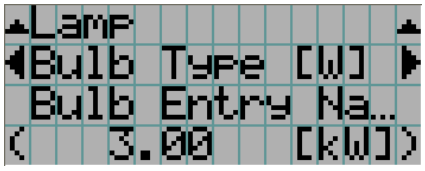

← Displays Bulb Entry registered name.

← Displays Bulb Entry lamp rated output (kW).

Bulb Type [H]

Displays the registered name and the lamp bulb warning time (Bulb Warning Time) and setting of the currently used lamp bulb.

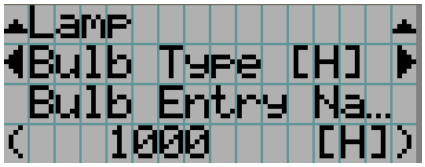

← Displays Bulb Entry registered name.

← Displays Bulb Warning Time setting (H).

4.5.2 Preset Button

Displays the titles assigned to the preset buttons (<1> to <8> buttons) on the projector's control panel.

←Selects the preset button whose contents you want to display.

←Displays the assigned title numbers.

←Displays the registered names of the assigned titles.

4.5.3 Usage

Displays the hours of projector head, lamp, lamp house, fan, and air filter usage, and warning display time of the lamp bulb.

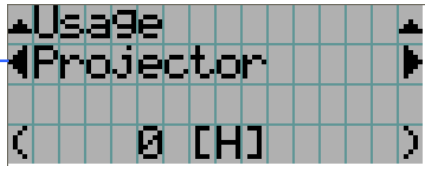

←Selects the item to display.

←Displays the hours of use (H).

Projector	Displays the hours of projector head use.
Bulb	Displays the hours of use of the current lamp bulb.
Lamp house	Displays the hours of use of the current lamp house.
Bulb Warning	Displays the currently enabled warning time. The following is displayed depending on the item set by the Bulb Warning setting. - When Use Bulb Entry is enabled: Displays the Bulb Entry value. - When in Manual setting: Displays the value set using Manual.
AC On Fan	Displays the usage time of the projector cooling fan (AC On Fan). Fan 6 corresponds to the AC On Fan.
Power On Fan	Displays the usage time of the projector cooling fan (Power On Fan). Fan 0 to Fan 5 corresponds to Power On Fan.
Lamp Fan	Displays the usage time of the lamp cooling fan.
Filter	Displays the usage time of the air filters (for the projector head and for the lamp).

4.5.4 Error Code

Displays the error code when an error occurs. See the "Error Code List" in the Appendix for details on error codes.

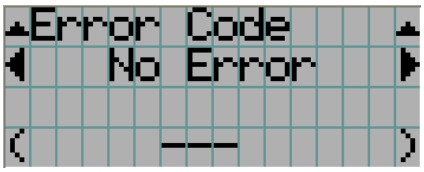

←Displays the code of the error currently occurring.

←Displays the name of the error currently occurring.

When multiple errors occur, you can display them by pressing the LEFT/RIGHT buttons.

4.5.5 Version

Displays the versions of the projector head, and the multi-media switcher (MMS) (optional).

System

Displays the version information of the projector head.

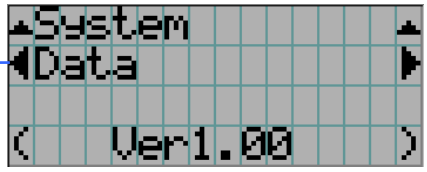

←Selects the item to display.

←Displays the version information.

BIOS	Displays the BIOS version of the projector head.
Firmware	Displays the firmware version of the projector head.
Data	Displays the data version of the projector head.
Lens	Displays the firmware version of the lens mount on the projector.
Serial No.	Displays the serial number of the projector head.
Model	Displays the model name of the projector head.

SIB

Displays the version information of the signal input board (NC-80LB01).

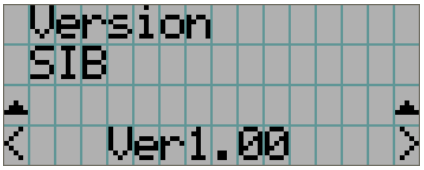

← Displays the version information.

IMB

Displays the version information of the image media block.

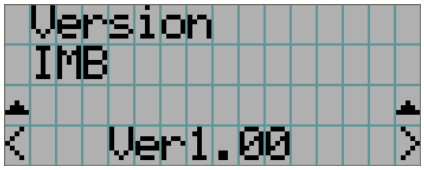

← Displays the version information.

MMS (Built-in)

Displays the version of the multi-media switcher (MMS) connected to the projector head. However, if "Not Use" is selected in the MMS Select menu, the various version information is not displayed.

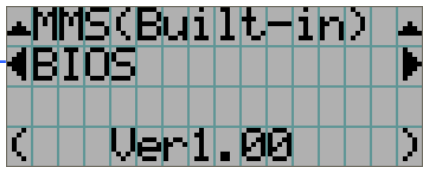

←Selects the item to display.

←Displays the version information.

BIOS	Displays the BIOS version of the built-in MMS (MM3000B).
Firmware	Displays the firmware version of the built-in MMS (MM3000B).
Data	Displays the data version of the built-in MMS (MM3000B).
FPGA	Displays the FPGA version of the built-in MMS (MM3000B).
Cfg FPGA	Displays the configuration FPGA version of the built-in MMS (MM3000B).
Serial No.	Displays the serial number of the built-in MMS (MM3000B).

4.5.6 IP Address

Displays the IP address set in the projector head.

←Selects the item to display the IP address.

←Displays the IP address.

System	Displays the IP address set for the projector head (System).

4.5.7 Setup Date

4.5.8 Option Status

Displays the link status of the device mounted in slot A and slot B (signal input board, multi-media switcher, or media block) on the projector.
Normally the device name mounted in slot A and slot B are displayed. The device name is displayed in ( ) when the projector is in standby or when connection to the device cannot be confirmed.

← Displays the link status of the device in slot B.

← Displays the link status of the device in slot A.

B	Displays the link status of the device in slot B. - SIB: Signal input board - IMB: Image media block - No Board: No device mounted
A	Displays the link status of the device in slot A. - MMS: Multi-media switcher - IMB: Image media block - No Board: No device mounted

5. Appendix

5.1 List of registered titles (when shipped from the factory)

The data listed below have been cataloged in your projector before shipping from our factory.

List of default Titles

Preset Key No.	TITLE		Input	FILES		Source		TCGD	3D File	Anamor-phic Lens
	No.	TITLE		PCF	SCREEN	Input Size (HxV)	Aspect Ratio			
1	001	DCDM XYZ 239	SDI-A,B	DCDM_XYZ_239	DC2K SCOPE	2048x858	0	-	Disable	None
2	002	DCDM XYZ 185	SDI-A,B	DCDM_XYZ_185	DC2K FLAT	1998x1080	0	-	Disable	None
3	003	DCDM RGB 239	SDI-A,B	DCDM_RGB_239	DC2K SCOPE	2048x858	0	-	Disable	None
4	004	DCDM RGB 185	SDI-A,B	DCDM_RGB_185	DC2K FLAT	1998x1080	0	-	Disable	None
5	005	MXFI 239	SDI-A	MXFI_239	DC2K SCOPE	1920x804	0	-	Disable	None
6	006	MXFI 185	SDI-B	MXFI_185	DC2K FLAT	1920x1038	0	-	Disable	None
-	007	HDTV	SDI-B	HDTV 1920x1080	DC2K HDTV	1920x1080	0	P7v2 theatre	Disable	None
7	008	DVI-A	DVI-A	DVI 2048x1080	DC2K DVI	0x0	0	P7v2 theatre	Disable	None
8	009	DVI-B	DVI-B	DVI 2048x1080	DC2K DVI	0x0	0	P7v2 theatre	Disable	None
-	010	DVI-TWIN	DVI-A,B	DVI 2048x1080	DC2K DVI	0x0	0	P7v2 theatre	Disable	None

5.2 Error code list

Please inquire your dealer/distributor about action to be taken for each error code.

Error code	Error message	Description
1	Lamp Door Open	Lamp door (cover) is open.
2	Lamp OverTemp.	Temperature (lamp temperature) is abnormal.
4	GPSU(12V) Fail	Power supply is abnormal.
5	Lamp Unlit	Lamp doesn't light up.
6	House OverTime	Lamp house cumulative time is over.
8	LPSU OverTemp.	Temperature (lamp power inside temperature) is abnormal.
12	E2PROM R Fail	E2PROM data read error is detected.
13	Interlock Fail	Interlock error is detected.
15	E2PROM W Fail	E2PROM data write error is detected.
17	Pump Stop	Stopped for pump error.
120	DLP Ack Fail	Cinema board returns ACK error
121	Lens Fail	Lens unit control error
123	Bulb OverTime	Lamp bulb cumulative time is over.
125	LPSU Fail	Lamp power supply is abnormal.
128	OutRange	Adjusting lamp output value has set out of range.
129	Down Lamp Power	Down lamp power to decrease set inside temperature.
130	MMS Comm Fail	MMS communication error is detected.
131	MMS Fan Stop	Built-in MMS fan has stopped.
132	MMS Fail	Built-in MMS internal error.
133	MM Reset	-
140	DLP CommR Fail	No communication with the cinema board.
141	DLP CommE Fail	No communication with the cinema board and DCC.
145	SensorFail Outside Air	Sensor (Out) read error.
146	SensorFail LPSU Intake	Sensor (Inside Air) read error.
147	SensorFail Exhaust	Sensor (Exhaust) read error.
148	SensorFail DMD-B	Sensor (DMD) read error.
150	Fan0 Stop	Fan has stopped.
151	Fan1 Stop	Fan has stopped.
152	Fan2 Stop	Fan has stopped.
153	Fan3 Stop	Fan has stopped.
154	Fan4 Stop	Fan has stopped.
155	Fan5 Stop	Fan has stopped.
156	Fan6 Stop	Fan has stopped.
157	Fan7 Stop	Fan has stopped.
158	Fan8 Stop	Fan has stopped.
159	Fan9 Stop	Fan has stopped.
160	GPSU Fan Stop	Fan has stopped.
162	Lamp Fan0 Stop	-
163	Lamp Fan1 Stop	-

Error code	Error message	Description
164	ICP Fan Stop	-
165	GPI MACRO(n) Selection Invalid	The Preset Button (n) could not be selected.
166	GPI Control Invalid	GPI control could not be executed.
170	OverTemp.Outside Air	Set outside temperature (Outside Air) is abnormal.
171	OverTemp.Precaution	Set inside temperature (Inside Air) is close to over temperature.
172	OverTemp.Exhaust	Set inside temperature (Exhaust) is abnormal.
173	OverTemp.DMD-B	Set inside temperature (DMD) is abnormal.
174	Bulb Entry	Not selecting a lamp bulb type.
177	Tamper Fail	The Service Door Tamper Switch is open.
178	Marriage Tamper Fail	The Marriage Tamper Switch is open.
180	CPU Fail(Mem)	System Memory Test Failed.
187	GPSU(24V) Fail	-
201	Error Log Write Fail	-
210	Unknown LPSU Model	-
211	LPSU Fan Stop	-
213	12V Outside range	-
214	24V Outside range	-
215	Lamp Filter Time Over	-
216	Body Filter Time Over	-
220	AC On Fan Exchange Time	-
221	Power On Fan Exchange Time	-
222	Lamp Fan Exchange Time	-
230	Router Fail	-
231	SensorFail Opt	-
233	Illegal MAC Address	-
240	SIB Comm Fail	-
241	SIB Error	-
242	SIB FPGA Reboot	-
250	Fan0 Stop Precaution	-
251	Fan1 Stop Precaution	-
252	Fan2 Stop Precaution	-
253	Fan3 Stop Precaution	-
254	Fan4 Stop Precaution	-
255	Fan5 Stop Precaution	-
256	Fan6 Stop Precaution	-
257	Fan7 Stop Precaution	-
258	Fan8 Stop Precaution	-
259	Fan9 Stop Precaution	-
260	Lamp Fan0 Stop Precaution	-
261	Lamp Fan1 Stop Precaution	-
262	Pump Stop Precaution	-
263	ICP Fan Stop Precaution	-
301	System Error	ICP board error
302	Self Test Error	ICP board error
303	Install Release Package Error	ICP board error

Error code	Error message	Description
304	Load Release Package Error	ICP board error
305	Key Error	ICP board error
306	Certificate Error	ICP board error
317	ICP Normal Configuration Error	ICP board error
318	ICP Boot Configuration Error	ICP board error
319	FMT Normal Configuration Error	ICP board error
320	FMT Boot Configuration Error	ICP board error
321	FMT Satellite Configuration Error	ICP board error
322	1.20V Supply out of range	ICP board error
323	1.80V Supply out of range	ICP board error
324	2.50V Supply out of range	ICP board error
325	3.30V Regulator out of range	ICP board error
326	ICP FPGA Temperature out of range	ICP board error
327	FMT FPGA Temperature out of range	ICP board error
328	ICP Flash Update Error	ICP board error
329	FMT Sequence Data File Mismatch	ICP board error
330	FMT DMD Data File Mismatch	ICP board error
331	FMT Flash Checksum Error - Sequence Data	ICP board error
332	FMT Flash Checksum Error - DMD Data	ICP board error
333	Satellite Hardware Mismatch	ICP board error
334	FMT Flash Update Error	ICP board error
335	Red Satellite Reports Reset	ICP board error
336	Red Satellite Serial Link Error	ICP board error
337	Red Satellite Firmware Configuration Error	ICP board error
338	Red DAD1000 Bias Under Voltage Error	ICP board error
339	Red DAD1000 Reset Under Voltage Error	ICP board error
340	Red DAD1000 Offset Under Voltage Error	ICP board error
341	Red DAD1000 Thermal Shutdown Error	ICP board error
342	Green Satellite Reports Reset	ICP board error
343	Green Satellite Serial Link Error	ICP board error
344	Green Satellite Firmware Configuration Error	ICP board error
345	Green DAD1000 Bias Under Voltage Error	ICP board error
346	Green DAD1000 Reset Under Voltage Error	ICP board error
347	Green DAD1000 Offset Under Voltage Error	ICP board error
348	Green DAD1000 Thermal Shutdown Error	ICP board error
349	Blue Satellite Reports Reset	ICP board error
350	Blue Satellite Serial Link Error	ICP board error
351	Blue Satellite Firmware Configuration Error	ICP board error
352	Blue DAD1000 Bias Under Voltage Error	ICP board error
353	Blue DAD1000 Reset Under Voltage Error	ICP board error
354	Blue DAD1000 Offset Under Voltage Error	ICP board error
355	Blue DAD1000 Thermal Shutdown Error	ICP board error
356	RTC Error	ICP board error
400	Enigma Comm Fail	Enigma communication error
410	System Error	Enigma Status error
411	Self Test Error	Enigma Status error
412	Install Release Package Error	Enigma Status error
413	Load Release Package Error	Enigma Status error
414	TI Login List Package Error	Enigma Status error
415	Security Officer Login List Package Error	Enigma Status error

Error code	Error message	Description
419	Certificate or Key Error	Enigma Status error
426	User Loader Integrity Error	Enigma Status error
427	Main Application Integrity Error	Enigma Status error
428	RNG Hardware Integrity Error	Enigma Status error
429	DRNG Algorithm Integrity Error	Enigma Status error
430	RSA Algorithm Integrity Error	Enigma Status error
431	AES Algorithm Integrity Error	Enigma Status error
432	HMAC Algorithm Integrity Error	Enigma Status error
433	SHA Algorithm Integrity Error	Enigma Status error
434	TLS Integrity Error	Enigma Status error
435	FPGA Configuration Integrity Error	Enigma Status error
436	FPGA CineLink 2 Decryption Integrity Error	Enigma Status error
437	RTC Error	Enigma Status error
442	FPGA Configuration Error	Enigma Status error
443	FPGA Temperature out of range	Enigma Status error
446	RNG Hardware Duplicate Output Error	Enigma Status error
447	DRNG Algorithm Duplicate Output Error	Enigma Status error
450	1.20V Supply out of range	Enigma Status error
451	1.80V Supply out of range	Enigma Status error
452	2.50V Supply out of range	Enigma Status error
453	3.30V Regulator out of range	Enigma Status error
458	SelfTest User Loader Integrity Error	Enigma Status error
459	SelfTest Main Application Integrity Error	Enigma Status error
460	SelfTest RNG Hardware Integrity Error	Enigma Status error
461	SelfTest DRNG Algorithm Integrity Error	Enigma Status error
462	SelfTest RSA Algorithm Integrity Error	Enigma Status error
463	SelfTest AES Algorithm Integrity Error	Enigma Status error
464	SelfTest HMAC Algorithm Integrity Error	Enigma Status error
465	SelfTest SHA Algorithm Integrity Error	Enigma Status error
466	SelfTest TLS Integrity Error	Enigma Status error
467	SelfTest FPGA Configuration Integrity Error	Enigma Status error
468	SelfTest FPGA CineLink. 2 Decryption Integrity Error	Enigma Status error
474	Security Tamper	Enigma Status error
475	Top Side Security Enclosure Open	Enigma Status error
476	Bottom Side Security Enclosure Open	Enigma Status error
477	Security Battery Event	Enigma Status error
478	Software Commanded Zeroization	Enigma Status error
481	Security Enclosure Not Armed	Enigma Status error
482	Physical Marriage Tamper	Physical Marriage Tamperred.
483	Logical Marriage Tamper	Logical Marriage Tamperred.
484	Marriage NOT Active	Marriage is cleared.
486	Service Door Tamper	Enigma Status error
487	Security Log Error	Enigma Status error
488	Security Battery Low Warning	Enigma Status error
489	Security Log Warning	Enigma Status error

5.3 Battery replacement method for ICP Board

The coin battery (Panasonic BR2330) mounted on the ICP board provides electrical power for maintaining tamper detection, time, and date information while the power to the projector is off. If the battery voltage drops, the tamper detection circuit is activated and the security key is erased. Once the security key has been erased, the projector requires repair at the factory.

⚠Warning	• Before replacing the battery, thoroughly read the content of this section, and perform the work by following the procedure correctly. If you make a mistake while fitting the new battery, there is a risk of explosion and damaging the projector. • When replacing the battery, use the same model of battery. • Dispose of the used battery by following the directions of your local government agency.

Note

- Make sure that the AC power supply is turned off while removing the ICP board from the projector.
- Always adhere to the instructions given in this section.
- Although data is maintained while the battery is being replaced for approximately 3 hours by the sub-battery built into the ICP board (when the sub-battery is fully charged), please replace the battery quickly. To ensure that the sub-battery is fully charged, turn the projector power supply on for 30 minutes or more before replacing the battery.
- If you remove the front cover, side cover, or lens side cover, the following error message is displayed on the LCD screen of the main unit operating panel by the tamper detection circuit of the signal input board.
  "Tamper Fail", "Service Door Open"

  Also, if you remove the closing panel or device from slot A, the following error message is displayed on the LCD screen of the main unit operating panel by the tamper detection circuit of the signal input board. Furthermore, since the marriage is cleared, re-marriage is necessary.
  "Marriage Tamper Fail", "Physical Marriage Tamper", "Marriage Not Active"

  Video input to the HDSDI port of the signal input board cannot be displayed while an error message is being displayed. Refer to "3.2 Recovering from Tamper Errors" (page 83) for the recovery procedure.

[1] Turn off the power to the projector.

[2] Remove the cables connected to the connector area on the projector.

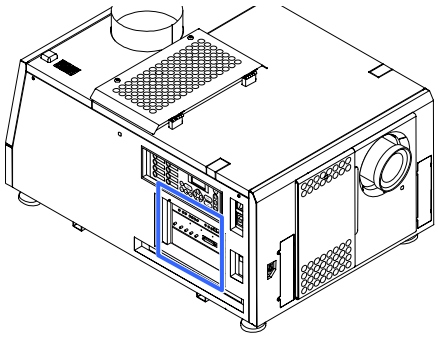

[3] Remove the Side cover.

<1> Unlock the cover locks using the cover key.

<2> Loosen five screws of the Side cover until their rotations become idle. The screws are not removed.

<3> Remove the cover by rotating it towards you and lifting out.

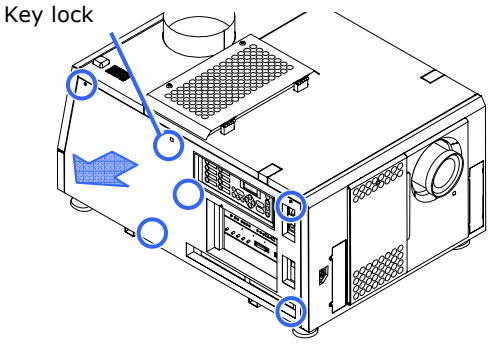

[4] Remove the boards mounted in slot A and slot B.

Remove the mounted boards in the order slot A then slot B.

<1> Unscrew the locking screws (2 locations) on the front of the slot A/B until the screws turn freely. These screws cannot be removed.

<2> Take hold of the installation handle on the front of the board, and pull the board directly out.

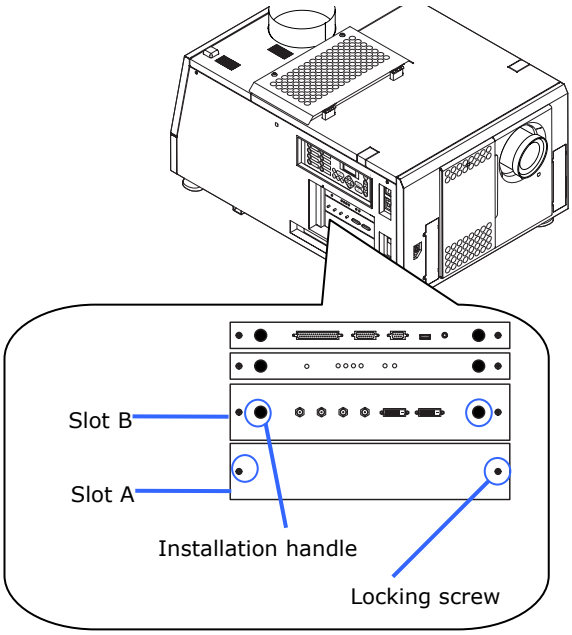

[5] Remove the ICP board.

<1> Unscrew the locking screws (2 locations) on the front of the ICP board until the screws turn freely. These screws cannot be removed.

<2> Take hold of the installation handle on the front of the ICP board, and pull the board directly out.

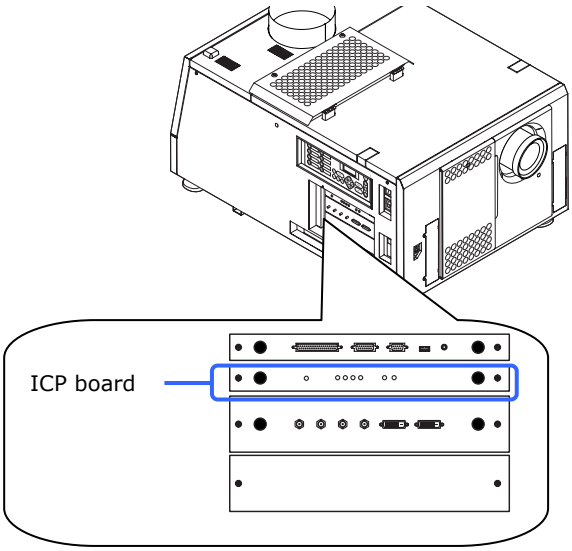

[6] Remove the battery.

To remove the battery, use a non-conductive tool that does not have a sharp tip, or use your fingers.

<1> Gently lift up the positive (+) terminal that is retaining the battery.

<2> Insert a non-conductive tool or your finger into the negative side of the socket.

<3> Remove the battery by lifting it out.

Location of battery on ICP board

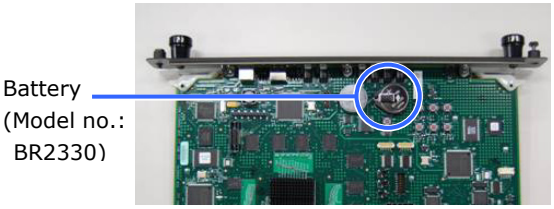

Removing the battery

<1>

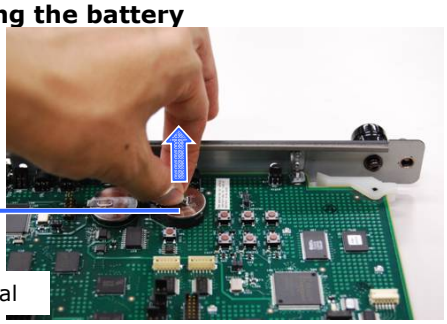

<2>

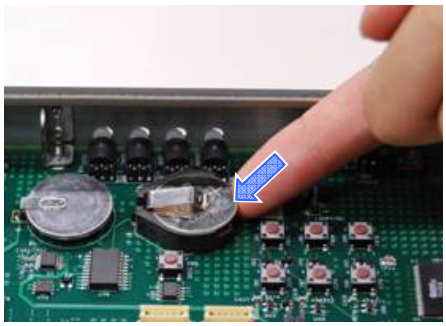

<3>

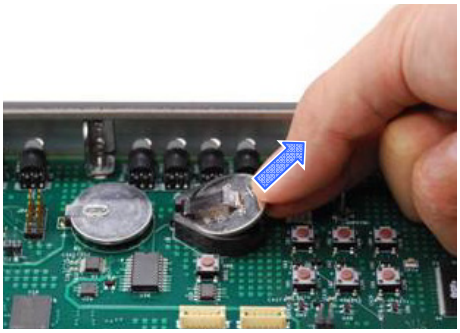

Note

- If you are using a tool to remove the battery, ensure that you have securely inserted the tool between the battery and the socket before removing the battery. Furthermore, take care to ensure that the tool you use to remove the battery does not touch the ICP board. There is a risk of damaging the ICP board.

[7] Fit the new battery.

<1> Check the model number of the new battery.
Model number: BR2330 (Panasonic)

<2> Insert the battery into the socket ensuring that the positive (+) side of the battery is upwards.

<3> Ensure that the positive (+) terminal of the socket is pressing down on the positive (+) surface of the battery.

<2>

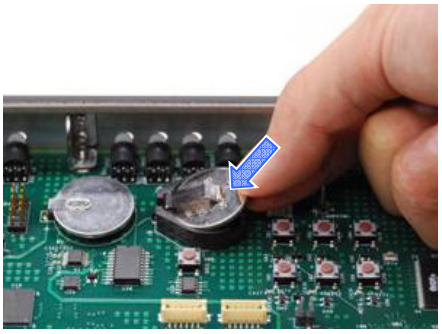

<3>

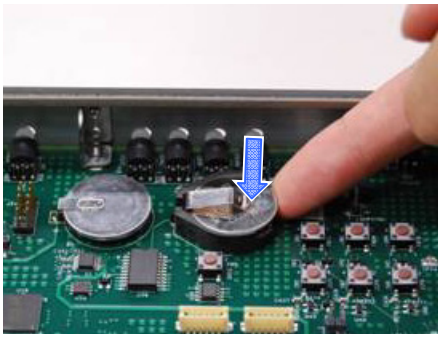

[8] Mount the boards in slot A and slot B.

Mount the boards in the order slot A then slot B.

<1> Hold the installation handle on the front of the board and insert it straight along the guides.

<2> Tighten the locking screws (2 locations) on the board front to affix the board.

[9] Fit the ICP board into the projector.

<1> Hold the installation handle on the front of the ICP board and insert it straight along the guides.

<2> Tighten the locking screws (2 locations) on the ICP board front to affix the board.

[10] Attach the side cover.

[11] Reattach the cables that you removed in Step 2.

[12] Turn on the power to the projector.

[13] Reconfigure the marriage.

Refer to "3.2 Recovering from Tamper Errors" (page 83) for details.

Note

- If you do not set the marriage, you will not be able to project encrypted content input to the HDSDI pin.

5.4 Batterieaustauschverfahren für ICP-Karte

Die Knopfbatterie (Panasonic BR2330) auf der ICP-Karte liefert den fürs Erkennen von Daten, Zeit und Datum bei abgeschaltetem Projektor notwendigen Strom. Wenn die Batteriespannung zurückgeht, wird der Datenerkennungskreis aktiviert, und der Sicherheitscode wird gelöscht. Wenn der Sicherheitscode gelöscht worden ist, muss der Projektor in der Fabrik wiederhergestellt werden.

⚠Warnung	• Lesen Sie aufmerksam den Inhalt dieses Kapitels bevor Sie die Batterie ersetzen und gehen Sie vor wie nachstehend beschrieben. Es besteht die Gefahr einer Explosion, wenn Sie beim Einsetzen der neuen Batterie einen Fehler machen, mit dem Risiko schwerwiegender Beschädigungen des Projektors. • Ersetzen Sie die Batterie ausschliesslich durch ein Modell des gleichen Typs. • Entfernen Sie die gebrauchte Batterie gemäss den geltenden Vorschriften Ihres Aufenthaltsortes.

Hinweis

- Stellen Sie sicher, dass die Netzspannung ausgeschaltet ist, wenn sie die ICP-Karte aus dem Projektor nehmen.
- Gehenm Sie immer nach den Anweisungen in diesem Kapitel vor.
- Auch wenn die Daten mittels in der ICP-Karte eingebauten Zweitbatterie ca. 3 Stunden lang erhalten bleiben, wenn die Batterie ersetz wird (bei völlig aufgeladener Zweitbatterie), sollten Sie die Batterie möglichst bald ersetzen. Um sicherzustellen, dass die Zweitbatterie wirklich völlig aufgelanden ist, sollten Sie den Projektor mindestens 30 Minuten lang einschalten, bevor Sie die Batterie ersetzen.
- Falls Sie die Vorder- oder Seitenabdeckung, oder den Deckel der Linse entfernen wird die folgende Fehlermeldung vom Datenerkennungskreisauf dem LCD-Schirm der Betriebskonsole angezeigt.
  "Tamper Fail", "Service Door Open"

  Wenn Sie die Abdeckung oder das Gerät bei Steckplatz A entfernen, wird die folgende Fehlermeldung vom Datenerkennungskreisauf dem LCD-Schirm der Betriebskonsole angezeigt. Ausserdem muss eine neue Verbindung hergestellt werden, da die alte Verbindung gelöscht wurde,
  "Marriage Tamper Fail", "Physical Marriage Tamper", "Marriage Not Active"

  Die Videoeingabe im HDSDI Port der Signaleingabekarte kann nicht angezeigt werden, solange eine Fehlermeldung angezeigt wird. Siehe "3.2 Recovering from Tamper Errors" (Seite 83) betreffend der Wiederherstellung.

[1] Schalten Sie den Projektor aus.

[2] Ziehen Sie die Kabel aus dem Verbindungsteil des Projektors.

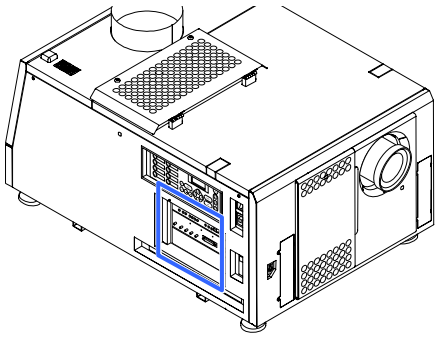

[3] Entfernen Sie die Seitenabdeckung.

<1> Schrauben Sie die Abdeckungssicherungen los mir Hilfe der speziellen Schlüssel.

<2> Schrauben Sie die fünf Schrauben der Seitenabdeckung los, bis sie keinen Halt mehr haben. Schrauben nicht entfernen.

<3> Entfernen Sie die Abdeckung indem Sie sie zu sich drehen und dann herausheben.

Tastensperre

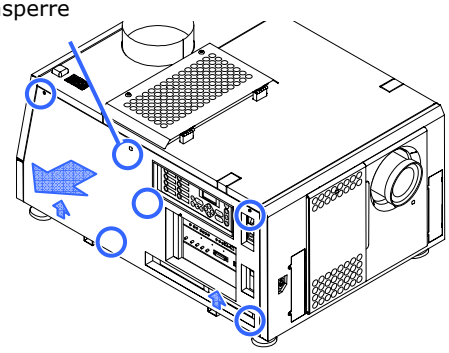

[4] Entfernen Sie die beiden Karten aus Einsteckplatz A und B.

Entfernen Sie zuerst die Karte aus Einsteckplatz A und dann aus Einsteckplatz B.

<1> Lösen Sie die Schrauben (an 2 Stellen) an der Vorderseiten des Einsteckplatzes A/B bis sie keinen Halt mehr haben. Diese Schrauben dürfen nicht entfernt werden.

<2> Nehmen Sie den Installationsgriff vorne an der Karte und ziehen Sie die Karte in gerader Richtung heraus.

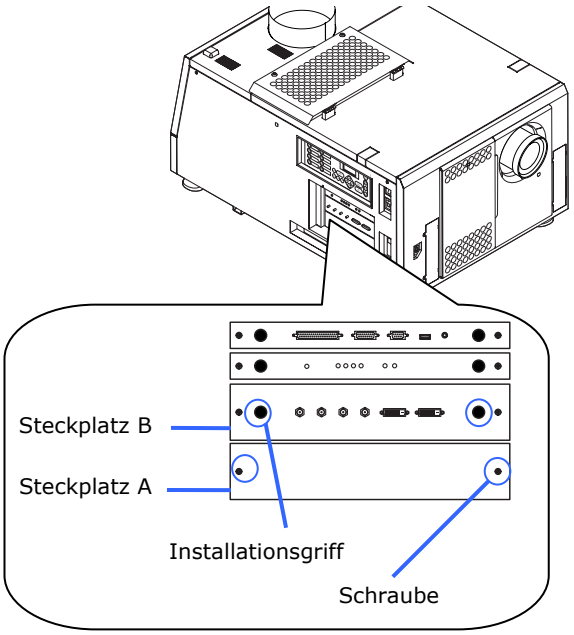

[5] Die ICP-Karte entfernen.

<1> Lösen Sie die Schrauben (an 2 Stellen) an der Vorderseiten der ICP-Karte bis sie keinen Halt mehr haben. Diese Schrauben dürfen nicht entfernt werden.

<2> Nehmen Sie den Installationsgriff vorne an der Karte und ziehen Sie die Karte in gerader Richtung heraus.

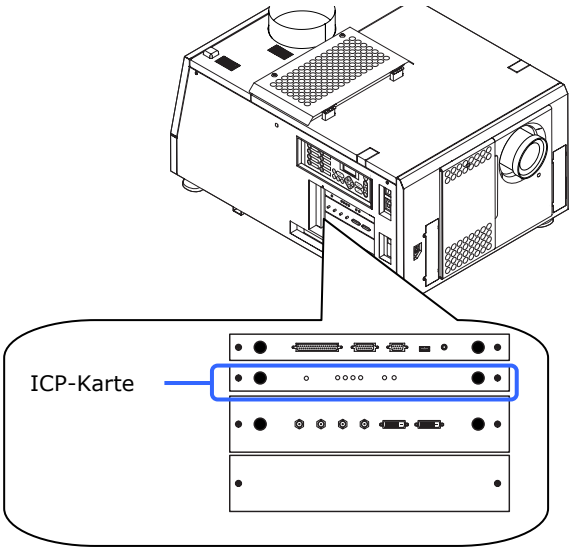

[6] Entfernen Sie die Batterie.

Verwenden Sie ein nicht leitendes Werkzeug ohne scharfe Spitze oder Ihre Finder, um die Batterie zu entfernen.

<1> Heben Sie sorgfältig die positive (+) Anschlussklemme der Batterie hoch.

<2> Stecken Sie ein nicht leitendes Werkzeug oder Ihren Finder in die negative Seite der Fassung.

<3> Heben Sie die Batterie hoch um sie zu entfernen.

Batterie auf der ICP-Karte

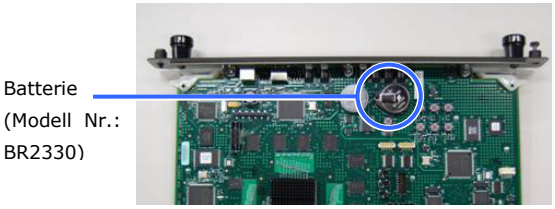

Die Batterie entfernen

<1>

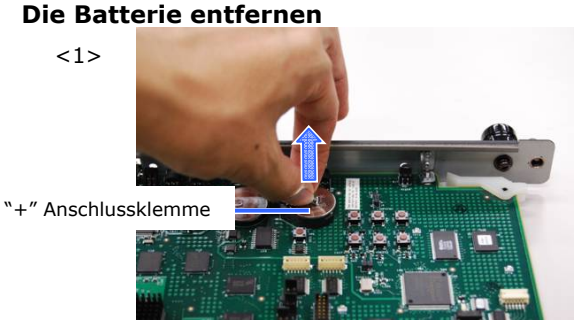

<2>

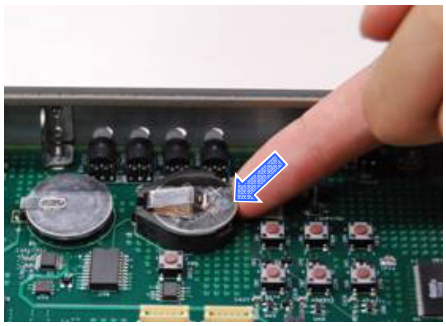

<3>

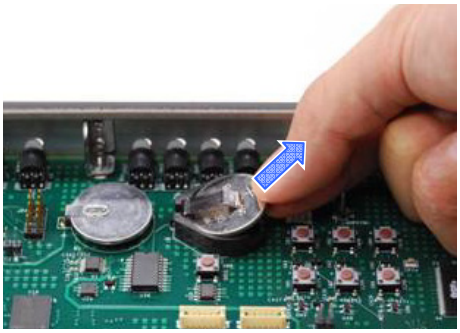

Hinweis

- Falls Sie die Batterie mit Hilfe eines Werkzeugs entfernen, sollten Sie sicher stellen, dass das Werkzeug richtig zwischen Batterie und Fassung eingefügt ist bevor Sie die Batterie entfernen. Ausserdem sollten Sie darauf achten, dass das Werkzeug dass Sie verwenden die ICP-Karte nicht berührt. Die ICP-Karte könnte dadurch beschädigt werden.

[7] Die neue Batterie einsetzen.

<1> Kontrollieren Sie die Modellnummerder neuen Batterie, Modellnummer BR2330 (Panasonic)

<2> Stecken Sie die Batterie in die Fassung, so dass die positive (+) Seiter der Batterie nach oben weist.

<3> Stellen Sie sicher dass die positive (+) Anschlussklemme der Fassung auf die positive (+) Fläche der Batterie druckt.

<2>

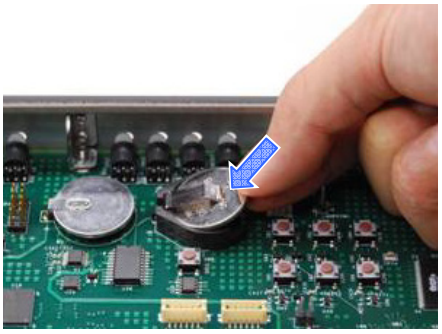

<3>

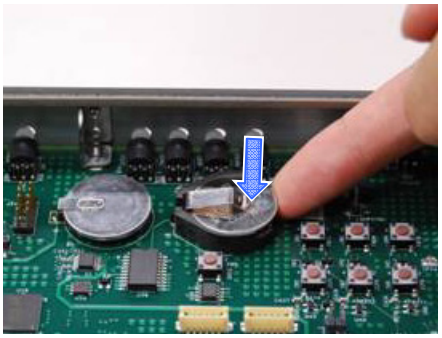

[8] Montieren Sie die Karten in den Einsteckplätzen A und B.

Montieren Sie zuerst die Karte in den Einsteckplatz A und dann in den Einsteckplatz B.

<1> Nehmen Sie den Installationsgriff vorne auf der Karte und stecken sie die Karte in gerader Linie, den Führungen nach ein.

<2> Ziehen Sie die Halteschrauben (2 Stellen) an der Vorderseite der Karte an um die Karte zu sichern.

[9] Stecken Sie die ICP-Karte in den Projektor.

<1> Nehmen Sie den Installationsgriff vorne auf der ICP-Karte und stecken sie die Karte in gerader Linie, den Führungen nach ein.

<2> Ziehen Sie die Halteschrauben (2 Stellen) an der Vorderseite der ICP-Karte an um die Karte zu sichern.

[10] Bringen Sie die Seitenabdeckung an.

[11] Verbinden Sie die beiden Kabel, die Sie unter 2 entfernt haben.

[12] Schalten Sie den Projektor ein.

[13] Konfigurieren Sie die Verbindung wieder aufs Neue.

Siehe "3.2 Recovering from Tamper Errors" (Seite 83) betreffend den Einzelheiten.

Hinweis

- Wenn die Verbindung nicht neu konfiguriert wird, kann die codierte Eingabe in der HDSDI Buchse nicht verwendet werden.

5.5 Index

U

V

Ver. 1.0 03/10

DLP Cinema® Projector

NEC

NC2000C

User's Manual

NEC Display Solutions, Ltd.

Important Information

Precautions:

Please read this manual carefully before using your NC2000C and keep the manual handy for future reference.

Important Safeguards

These safety instructions are to ensure the long life of your projector and to prevent fire and shock. Please read them carefully and heed all warnings.

WARNING

TO PREVENT FIRE OR SHOCK HAZARDS, DO NOT EXPOSE THIS UNIT TO RAIN OR MOISTURE.

CAUTION

TO REDUCE THE RISK OF ELECTRIC SHOCK, DO NOT OPEN COVER. NO USER-SERVICEABLE PARTS INSIDE. REFER SERVICING TO QUALIFIED SERVICE PERSONNEL.

This symbol warns the user that uninsulated voltage within the unit may have sufficient magnitude to cause electric shock. Therefore, it is dangerous to make any kind of contact with any part inside of this unit.

This symbol alerts the user that important literature concerning the operation and maintenance of this unit has been included. Therefore, it should be read carefully in order to avoid any problems.

CAUTION

- In order to reduce any interference with radio and television reception use a signal cable with ferrite core attached. Use of signal cables without a ferrite core attached may cause interference with radio and television reception.
- This equipment has been tested and found to comply with the limits for a Class A digital device, pursuant to Part 15 of the FCC Rules. These limits are designed to provide reasonable protection against harmful interference when the equipment is operated in a commercial environment. This equipment generates, uses, and can radiate radio frequency energy and, if not installed and used in accordance with the instruction manual, may cause harmful interference to radio communications. Operation of this equipment in a residential area is likely to cause harmful interference in which case the user will be required to correct the interference at his or her own expense.

WARNING

This is a Class A product. In a domestic environment this product may cause radio interference in which case the user may be required to take adequate measures.

DOC compliance Notice

This Class A digital apparatus meets all requirements of the Canadian Interference-Causing Equipment Regulations.

Machine Noise Information Regulation - 3. GPSGV,

The highest sound pressure level is less than 70 dB (A) in accordance with EN ISO 7779.

Disposing of your used product

EU-wide legislation as implemented in each Member State requires that used electrical and electronic products carrying the mark (left) must be disposed of separately from normal household waste.
This includes projectors and their electrical accessories or lamps. When you dispose of such products, please follow the guidance of your local authority and/or ask the shop where you purchased the product.
After collecting the used products, they are reused and recycled in a proper way. This effort will help us reduce the wastes as well as the negative impact to the human health and the environment at the minimum level.
The mark on the electrical and electronic products only applies to the current European Union Member States.

WARNING

Installation and transport

Consult your dealer for installing and transporting the projector. DO NOT install or transport the projector by non-professional person. Doing so may cause the lamp to break or may cause personal injury.

- Power Supply
  - Consult your dealer for installing the power cable to the projector. DO NOT install the power cable by yourself. Doing so may cause a fire or electric shock.
  - The projector is so designed that it operates with the power supply voltage described below.
    For C1 connection
    (When the AC power to the projector power supply and the lamp power supply is provided by a single cable)
    - AC 200V-240V single phase 50/60Hz

    For C2 connection
    (When the AC power to the projector power supply and the lamp power supply is provided by separate cables)
    - AC 100V-240V single phase 50/60Hz (projector power supply)
    - AC 200V-240V single phase 50/60Hz (lamp power supply)

    Ensure that your power supply fits this requirement before attempting to use your projector.
  - Handle the power cable carefully. A damaged or frayed power cable can cause electric shock or fire.
    - Do not bend or tug the power cable excessively.
    - Do not place the power cable under the projector, or any heavy object.
    - Do not cover the power cable with other soft materials such as rugs.
    - Do not heat the power cable.
- Turn off the projector, shut down AC power by using a circuit breaker and contact qualified service personnel under the following conditions. For C2 connection, turn off the projector, shut down the AC power to the projector and the lamp using a circuit breaker, and contact your dealer/distributor for a repair.

- When the power cable is damaged or frayed.
- If liquid has been spilled into the projector, or if it has been exposed to rain or water.
- If the projector does not operate normally when you follow the instructions described in this user's manual.
- If the projector has been dropped or the cabinet has been damaged.
- If the projector exhibits a distinct change in performance, indicating a need for service.

- Do not place the projector in the following conditions:
  - near water, baths or damp rooms.
  - on an unstable cart, stand, or table.
  - in direct sunlight, near heaters or heat radiating appliances.
  - in a dusty, smoky or steamy environment.
  - on a sheet of paper or cloth, rugs or carpets.
- Do not place any liquids on top of your projector.
  Refer servicing to qualified service personnel if liquid has been spilled.
- Prevent foreign objects such as paper clips and bits of paper from falling into your projector. Do not attempt to retrieve any objects that might fall into your projector. Do not insert any metal objects such as a wire or screwdriver into your projector. If something should fall into your projector, disconnect it immediately and have the object removed by a qualified service personnel.
  For C2 connection, turn off the projector, shut down the AC power to the projector and the lamp using a circuit breaker, and contact your dealer/distributor.
- Do not cover the lens with the supplied lens cap or equivalent while the projector is on. Doing so can lead distorting or to melting of the cap and burning your hands due to the heat emitted from the light output.

CAUTION

- High Pressure Lamp May Explode if Improperly Handled. Only service personnel should open the lamp door.
  Refer Servicing to Qualified Service Personnel.
- Do not look into the lens while the projector is on. Serious damage to your eyes could result.
- Do not touch the projector during a thunder storm. Doing so can cause electrical shock or fire.
- Ensure that there is sufficient ventilation and that vents are unobstructed to prevent potentially dangerous concentrations of ozone and the build-up of heat inside your projector.
  Allow at least 8 inches (20 cm) of space between your projector and a wall. Allow at least 20 inches (50 cm) of space between the ventilation outlet of the projector and an object.
  Connect the projector exhaust outlet with the exhaust equipment having a capacity of 13 m^3/min or more.
- Do not handle the projector and the power cable with wet hands. Doing so can cause electrical shock or fire.
- Shut down AC power to the projector and disconnect all the cables before moving the projector to another place.
  For C2 connection, turn off the projector, shut down the AC power to the projector and the lamp using a circuit breaker. Disconnect the cables between devices and the lamp before moving the projector.
- Consult your dealer for installing the power cable to the projector. DO NOT install the power cable by yourself. Doing so may cause a fire or electric shock.
- To carry the projector, a minimum of five persons are required.
- Do not hold the lens part and the anamorphic lens part (or wide converter lens part) with your hand. Otherwise the projector may tumble or drop, causing personal injury.
- If the projector will not be used for an extended period of time, shut down AC power.
  For C2 connection, turn off the projector, shut down the AC power to the projector and the lamp using a circuit breaker.
- Shut down AC power by using a circuit breaker before cleaning.
  For C2 connection, turn off the projector, shut down the AC power to the projector and the lamp using a circuit breaker.
- Do not try to touch the ventilation outlet as it can become heated while the projector is turned on.
  Doing so can lead to burning your hands due to the emitted heat.
- When main body is damaged, cooling fluids may come out of internal part. DO NOT touch and drink the cooling fluid. When the cooling fluids are swallowed or contacted with your eyes, please consult with doctors immediately.
- When using a LAN cable:
  For safety, do not connect to the connector for peripheral device wiring that might have excessive Voltage.

Installation

- Do not put the projector on its side when the lamp is on. Doing so may cause damage to the projector.
- Handle your projector carefully. Dropping or jarring your projector could damage internal components.
- Controlled ambient light environments will allow for an image of higher contrast and depth to be displayed.
- Screens with a soiled, scratched, or discolored area will not produce a clean image. Care should be used in the handling of the screen.
- To carry the projector, a minimum of five persons are required. Remove the lens and the lamp before carrying the projector. Do not apply a strong shock to the projector.
- Keep finger prints or dust off the lens surface. Leaving finger prints or dust can cause unwanted shadows on the screen.
  Cover the lens with the supplied lens cap if the projector is not to be used for an extended period of time.

Lamp Caution: Please read before operation

- Due to the lamp being sealed in a pressurized environment, there is a small risk of explosion, if not operated correctly.
  There is minimal risk involved, if the unit is in proper working order, but if damaged or operated beyond the recommended hours, the risk of explosion increases. Please note that there is a warning system built in, that displays following message when you reach a preset operating time "Bulb Over Time". When you see this message please contact your dealer for a replacement.
  If the lamp does explode, smoke will be discharged from the vents located on the back of the unit. Do not stand in front of the vents during the operation. This smoke is comprised of glass in particulate form and Xenon gas, and will not cause harm if kept out of your eyes. If your eyes have been exposed to this gas, please flush your eyes out with water immediately and seek immediate medical attention. Do not rub your eyes! This could cause serious injury.

- Consult qualified service personnel for cleaning the inside of the projector or lamp replacement. Do not try to clean the inside of the projector or replace the lamp by yourself.
- Do not shut down AC power to the projector under the following conditions. Doing so can damage the projector.
  - While projecting images.
  - While cooling after the projector has been turned off. (The POWER button LED blinks in white while the fan is rotating, and “Cooling...” is displayed on the LCD screen. The cooling fan continues to work for 5 minutes.)

For questions relating to unclear points or repairs

Contact your dealer or the following support branch for questions relating to unclear points, malfunctions and repairs of the product.

In Europe

NEC Europe, Ltd. / European Technical Centre
Address: Unit G, Stafford Park 12, Telford TF3 3BJ, U.K.
Telephone: +44 1952 237000
Fax Line: +44 1952 237006

Table of Contents

1. What's in the Box? and the Names of the Projector Parts

1-1. Features

- DLP Cinema® dedicated projector that supports large screen needs

NEC has applied its mounting technology and leading imaging technology to newly develop lamp and optical systems as well as a cooling system to support large screen needs.

- Equipped with easy to use functions

(1) Lens memory function that can be operated with one touch, and lamp power memory function
The DLP Cinema® projector is provided with a lens memory function for storing lens zoom positions and shift positions to set screens sizes for each input signal. It is also provided with a lamp power memory function for storing the brightness of the images on the screen for each input signal.
Even if you are projecting multiple images that have different settings for image sizes and brightness, you can project them with the conditions pre-registered for each signal, simply by selecting the corresponding signal.

(2) Equipped with a lamp output control function
You can set to any brightness setting, from low brightness to high brightness. This function makes it possible to minimize the fluctuation (*) in brightness as brightness of the lamp decreases as a result of long-term lamp usage.
* The time for maintaining fluctuations in brightness depends on the setting value for brightness.

(3) Easy lamp replacement
The lamp can be replaced from the backside of the projector, so the lamp can be easily replaced even in narrow locations when a film projector is setup on the side and there is not much space on the projector side.

(4) Registered signal selection buttons
The projector has been equipped with new 8 signal selection buttons that make it easy to select registered signals. To this projector, 100 titles at most can be registered (input signal registration). Among the registered titles, any 8 titles can be assigned to the buttons <1> to <8>.

(5) Software which enables the user to operate the projector from a PC via a network is available (optional).
You can operate the projector via a network by installing the separately supplied Digital Cinema Communicator (DCC) on your PC.

(6) Supports various contents and types of usage by applying a separately-sold multi-media switcher.
By connecting an optional multi-media switcher (MM3000B), you can input RGB/VIDEO analog signals, and digital signals in formats not supported by the projector.

- DMD Face Dust Protection Structure

A dust control shield is arranged between each DMD chip of R, G and B, and the spectroscopic/condenser prism to prevent dust and dirt in the air, and oily particles in smoke associated with event halls from coming into contact with the face of the DMD and causing operating problems.

- Efficient cooling of the heat from the DMD unit by the cooling structure

The DMD unit uses a highly efficient liquid cooling method. This efficiently eliminates heat applied to the DMD by the complete dust control structure and high light output, thereby ensuring the reliability of the projector.

1-2. What's in the Box?

Check the content of the accessories.

☐ NC2000C projector

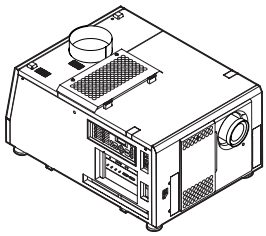

☐ Attachment for lamp x 1

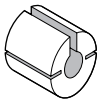

☐ Exhaust outlet protective sheet x 1

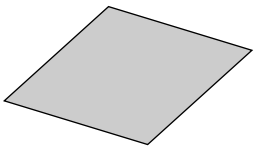

☐ Exhaust outlet protective sheet fastening band x 4

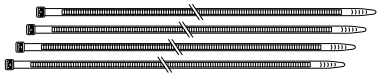

☐ Small iris x 1

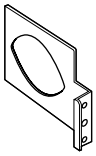

☐ Cover key x 2

☐ Lamp door key x 2

☐ Important Information x1

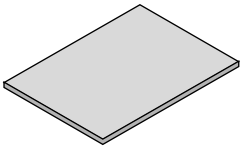

☐ CD-ROM (User's Manual)

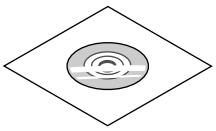

TIP

* In the event that you did not receive all of the accessories outlined above, or some are damaged, contact your dealer/distributor.
Differs slightly from the drawings in this manual, but there is no problem in actual use.

1-3. Names of the Projector Parts

1-3-1. Front of the Projector

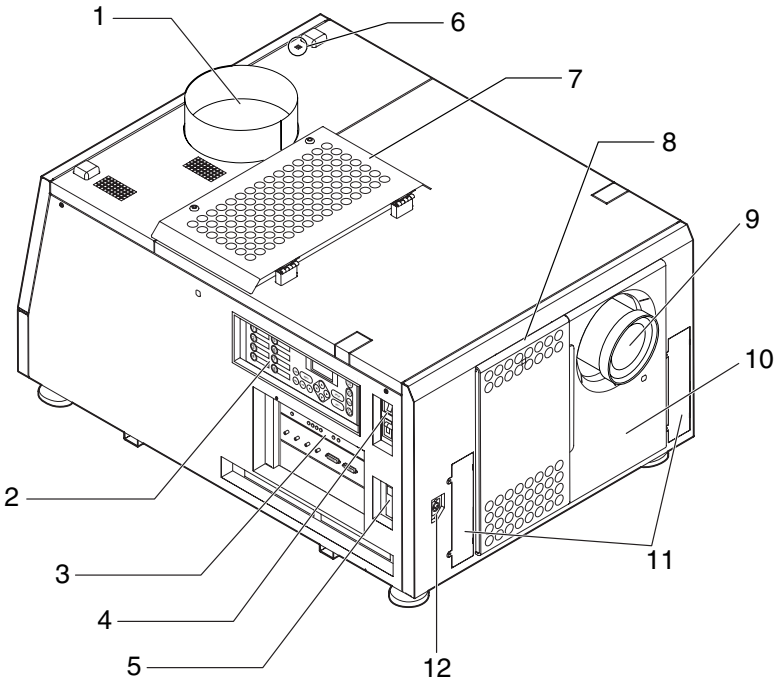

1. Air outlet (for cooling the lamp)
   Connects to an exhaust device to exhaust heat from the lamp. Please contact your dealer/distributor to install the exhaust device.
2. Control panel
   On the control panel, power to your projector is turned on or off, titles are selected, and various adjustments are made of projected screen. (See page 14)
3. Connection terminals
   Various image signal cable are to be connected here. (See page 13)
   You can expand signal input terminals by installing the optional media block (NC-80MB01) or internal multi-media switcher (MM3000B).
   Contact your dealer/distributor for more information on the NC-80MB01 and MM3000B.
4. Projector power switch (upper), lamp power switch (lower)
   The projector enters the standby state when you turn on the lamp power switch and projector power switch while the AC power is on.
5. Ethernet port
   The connector for external devices such as a cinema server or a PC installed with the DCC. (See page 13)
6. Buzzer
   The buzzer rings when the power is turned on or an error has occurred.
7. Air inlet (for cooling the lamp)
   The air inlet for cooling the lamp. Do not cover.
   An air filter is attached over the air inlet to prevent dust. Refer to "5-3. Replacing the Air Filter" (page 43) on how to replace the air filter.
8. Air inlet (for cooling the projector electric circuits)
   The air inlet for cooling the projector electric circuits. Do not cover.
   An air filter is attached over the air inlet to prevent dust. Refer to "5-3. Replacing the Air Filter" (page 43) on how to replace the air filter.

9. Lens (optional)
   Images are projected from the lens. Request your dealer/distributor to install or replace the lens.
10. Interlock connector (Inside front of projector)
   This is the connector for the projector safety device. This is used to control the projector from an external source. Consult with your dealer/distributor about using this.
11. Conversion lens stay fittings
   Fittings to attach the fixing stay when using the optional conversion lens (anamorphic lens or wide converter lens). Contact your dealer/distributor for more information on the conversion lens and fixing stay.
12. Conversion lens stage connecter terminal
   The terminal to connect the control connector of the conversion lens table when using the optional conversion lens (anamorphic lens or wide converter lens). Contact your dealer/distributor for an installation of the conversion lens.

NOTE Do not touch the air outlet and backside of the main unit when your projector is operating. Otherwise, the high temperature may cause burns.

1-3-2. Rear of the projector

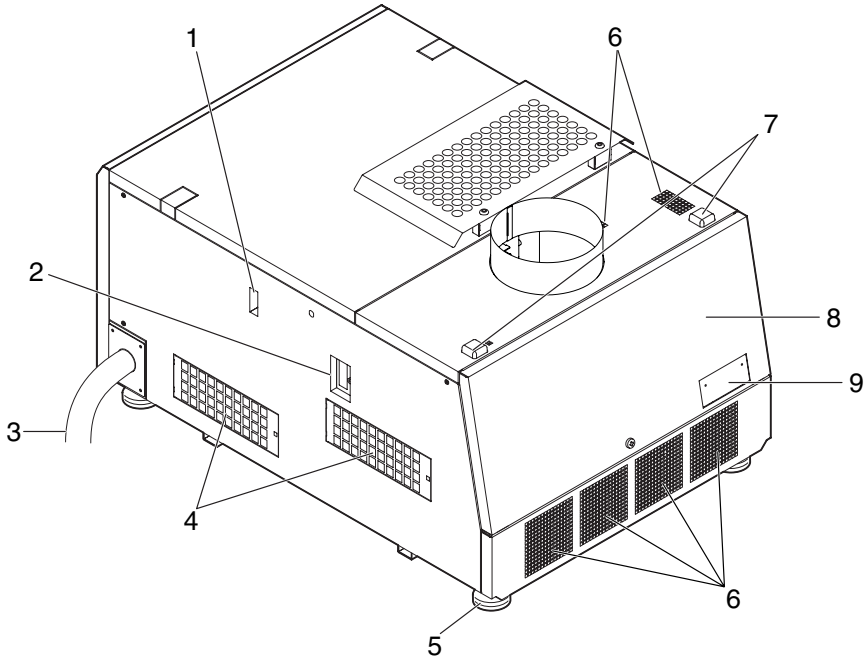

1. Cooling fluid gauge
   The gauge to indicate the remaining amount of the DLP cooling fluid.
2. Function expansion terminal connector
   The connector to attach the terminal to expand the projector functions.
3. AC power cable
   This is the cable that supplies AC power to the projector head. Contact your dealer/distributor for connecting the power cable or AC power cable.
4. Air inlet (for cooling the projector electric circuits)
   The air inlet for cooling the projector electric circuits. Do not cover. An air filter is attached over the air inlet to prevent dust. Refer to "5-3. Replacing the Air Filter" (page 43) on how to replace the air filter.
5. Level adjusters (in four positions on bottom)
   In the ordinary installation, you can adjust the projector inclination at 4 positions.
6. Air outlet (for cooling the projector electric circuits)
   The air outlet to exhaust the heat from the projector electric circuits. Do not cover.
7. Rear status indicator
   These indicate the status of the projector. When the projector is operating normally, these light/blink in green or orange. When an error occurs, they light/blink in red. When an error occurs, check the contents of the display on the LCD screen. (See page 53)
8. Lamp door
   This opens to allow the lamp to be replaced. Please contact your dealer/distributor to install and to replace the lamp bulb and lamp house.
9. Optical axis adjustment system protection cover
   The protection cover for the optical axis adjustment system (screw) for the lamp. Do not open this cover. Contact your dealer/distributor for adjusting the optical axis.

NOTE Do not cover the air inlets and outlet while the projector is in operation. Insufficient ventilation leads to a rise of the internal temperature and may cause a fire or malfunction.

WARNING:

Only service personnel should open the lamp door.

- The interior reaches high temperatures and there is a risk of burns.
- There is a risk of injury if the lamp is broken.

1-3-3. Connection terminals

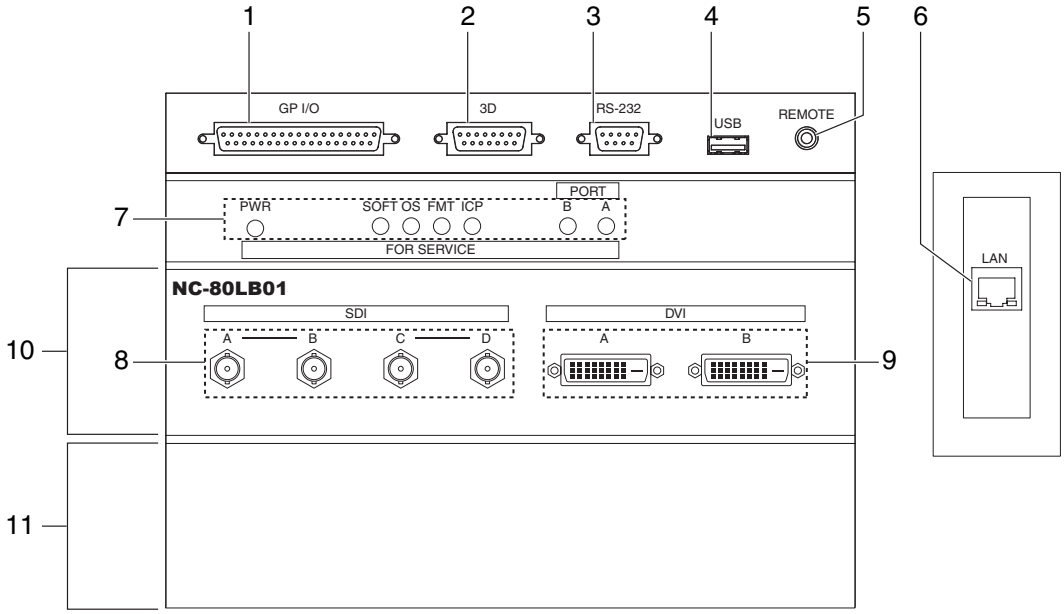

1. External control terminal (GP I/O) (D-Sub 37P)
   The terminal for externally controlling the projector or connecting a 3D image system to the projector. (See page 59)
2. 3D terminal (3D) (D-Sub 15P)
   The terminal for connecting a 3D image system to the projector. (See page 64)
3. PC control terminal (RS-232C) (D-Sub 9P)
   The terminal for service personnel to set data for the projector or for operating the projector from a PC via an RS-232C. Connect the projector and the PC with a commercially available RS-232C straight cable.
4. USB port (USB) (type A)
   The port for the projector maintenance.
5. Remote control device terminal (REMOTE) (Stereo mini)
   The terminal for controlling the projector from a remote control device.
6. Ethernet port (LAN) (RJ-45)
   The port for interfacing with an image signal server or controlling the projector from a PC via a network. Connect the projector and the PC with a commercially available Ethernet cable (10/100/1000Base-T).
7. Device management indicator
   The indicator for displaying the projector status. Used by service personnel during maintenance.
8. HDSDI input terminal (SDI-A/SDI-B/SDI-C/SDI-D) (BNC)
   The terminal for connecting an image signal server or video imaging device. Use a 75Ω coaxial cable.
   Use a combination of SDI-A and SDI-B, or SDI-C and SDI-D for a dual-link connection.
9. DVI-D input terminal (DVI-A/DVI-B) (DVI-D 24P)
   The terminal for connecting a DVI-D output terminal of a PC. Use a commercially available DVI-D signal cable (single-link).
10. Slot B
    The slot for a signal input board (NC-80LB01) or media block (NC-80MB01).
    A signal input board is installed at the time of factory shipping. Contact your dealer/distributor for an installation or uninstallation of a signal input board or media block.
11. Slot A
    The slot for a media block (NC-80MB01) or internal multi-media switcher (MM3000B).
    The slot is empty at the time of factory shipping. Contact your dealer/distributor for an installation of a media block or internal multi-media switcher.

1-3-4. Control panel

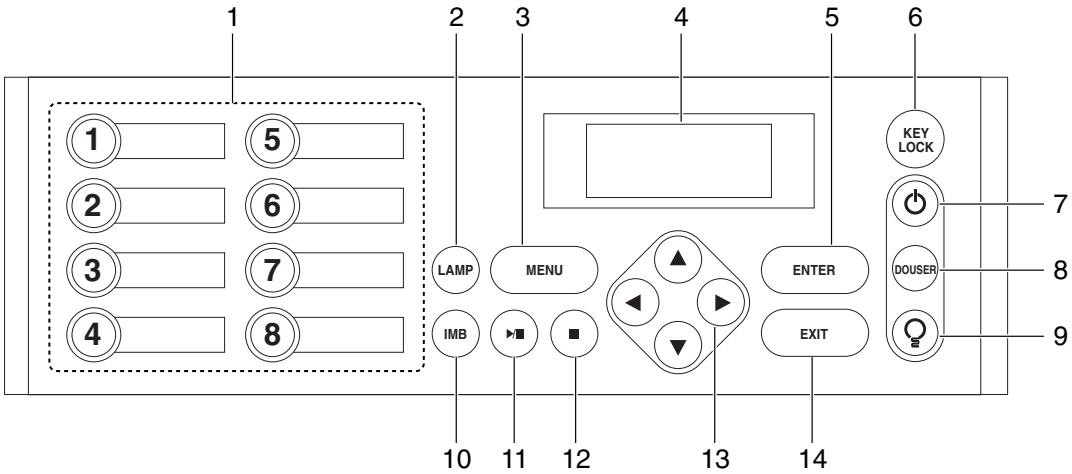

1. Button <1> to <8>

   Press the button <1> to <8> to select a title (input signal) assigned to each button.

   Up to 100 titles (input signals) can be registered to this projector, and any 8 titles from them can be assigned to the button <1> to <8>.

   Indicators on the left of each button show their assigned title or selection status.

Lit white	A title is assigned to the button
Lit green	The title is being selected
Off	No title is assigned to the button

2. LAMP button

   Press this button to display the lamp adjustment menu. (See page 26)

3. MENU button

   Press this button to display the menu for various settings and adjustments. (See page 35)

4. LCD screen

   The LCD screen displays menus and setting values for the projector operations.

5. ENTER button

   Press this button to select the menu item.

6. KEY LOCK button

   Press this button to lock (KEY LOCK) the buttons on the control panel. Buttons on the control panel do not function while KEY LOCK is on.

   Pressing the KEY LOCK button for one second or longer while KEY LOCK is off locks the buttons.

   Pressing the KEY LOCK button for one second or longer while KEY LOCK is on unlocks the buttons. (See page 27)

NOTE KEY LOCK becomes automatically on if no control panel operation takes place in the standby state for 30 seconds by default. (See page 27)

7. POWER button

Press this button for more than three seconds to turn on or off (standby) the projector.

Turn on the lamp power switch and projector power switch to set the projector in the standby state before turning on the projector. (See page 20)

Lit green	Power is on
Blinking green	The projector is starting up.
Lit white	Power is off (in the standby state)
Blinking white	The cooling fan(s) is running immediately after a power-off.

8. DOUSER button

Press this button to open and close the douser.

9. LAMP ON/OFF button

Press this button for five seconds or longer to turn on or off the lamp while the projector is on. (See page 28)

10. IMB button

This button is operable when the media block NC-80MB01 is installed in the projector.

Press this button to display the operation menu of the media block.

11. Play/pause button

This button is operable when the media block NC-80MB01 is installed in the projector.

Press this button to play or pause the image contents.

12. Stop button

This button is operable when the media block NC-80MB01 is installed in the projector.

Press this button to stop playing the image contents.

13. ▲/▼/◀/▶ (UP/DOWN/LEFT/RIGHT) buttons

Press these buttons to select a menu item while a menu is displayed.

14. EXIT button

Press this button to return to the previous menu item.

2. Installation and Connection

2-1. Steps for setting up and connecting

Use the following steps for setting up your projector:

- Step 1

Setup the screen and projector. (Contact your dealer to carry out the setup.)

- Step 2

Connect cables to the image input terminals. (See page 17)

Connect cables to the various control terminals. (See page 18)

2-2. Connecting the image input terminals

The projector has two image input terminals (HDSDI input terminal and DVI-D input terminal).

- HDSDI A/B/C/D input terminal (SDI-A/SDI-B/SDI-C/SDI-D) ---------- Inputs serial digital images from a cinema server or an image device such as HDSDI or VTR.
- DVI-D A/B input terminal (DVI A/DVI B) ---------- Inputs digital RGB signals from a PC.

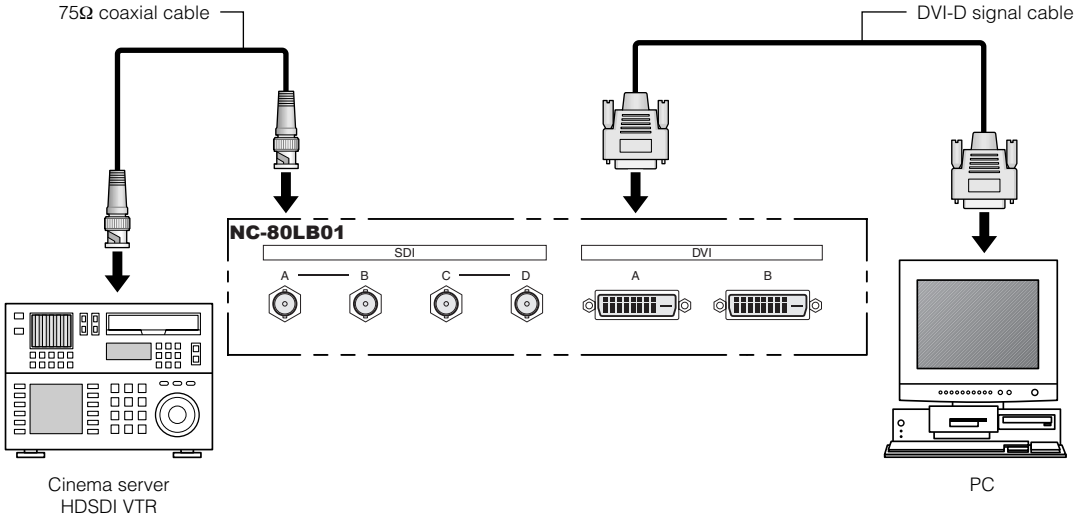

2-3. Connecting the various control terminal

For control, your projector comes with such ports as the PC control terminal and the Ethernet port (RJ-45).

- PC control terminal (RS-232) ---------- Use this terminal when controlling the projector in serial connection from a PC.
- Ethernet port (LAN) ---------- Use this port when controlling the projector in LAN connection from a PC.

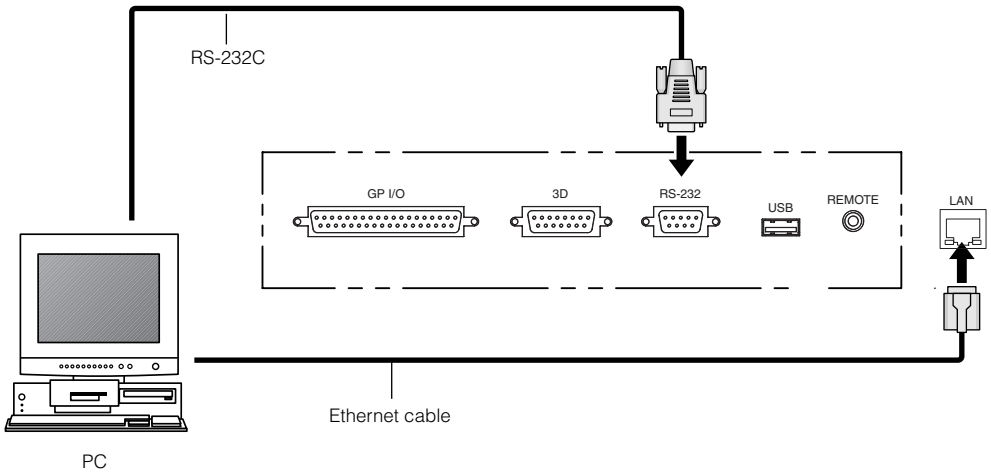

3.
Projection of Images (Basic Operation)

3-1. Steps of projecting images

- Step 1

Turn on the power to the projector. (See page 20)

- Step 2

Select the title of input signal. (See page 22)

- Step 3

Adjust the position and size of the projected screen. (See page 23)

- Step 4

Turn off the power to the projector. (See page 29)

3-2. Turning your projector on

Preparation: Supply AC power to the projector head.
Please contact your dealer/distributor to connect the power cable.

NOTE

- Turn off the projector power switch and lamp power switch when supplying or shutting down the AC power to the projector.
  Supplying or shutting down the AC power while the projector power switch and lamp power switch are on will damage the projector.
- Turning on and off the power involves a two-step operation; the “projector power switch and lamp power switch” and the “POWER button”.
- Turning power on (See this page)

[1] Turn on the “projector power switch and lamp power switch”.
Your projector is set in a standby state.
[2] If KEY LOCK is on, press the KEY LOCK button for one second or longer.
KEY LOCK is off and buttons on the control panel become operable.
[3] Press the POWER button three seconds or longer.
Your projector is turn on.

- Turning power off (See page 29)

[1] Press the POWER button three seconds or longer.
Your projector is set in a standby state.
[2] When the fan has stopped, turn off the “projector power switch and lamp power switch”.
Your projector is turned off.

1 Remove the lens cap.

2 Turn on the lamp power switch ([1]) then the projector power switch ([2]) on the side of the projector.

A buzzer will ring on the projector. The POWER button will blink green and the Rear STATUS indicator will light orange (standby state). KEY LOCK becomes automatically on if no control panel operation takes place in the standby state for 30 seconds by default. Buttons on the control panel do not function while KEY LOCK is on. (See page 27)

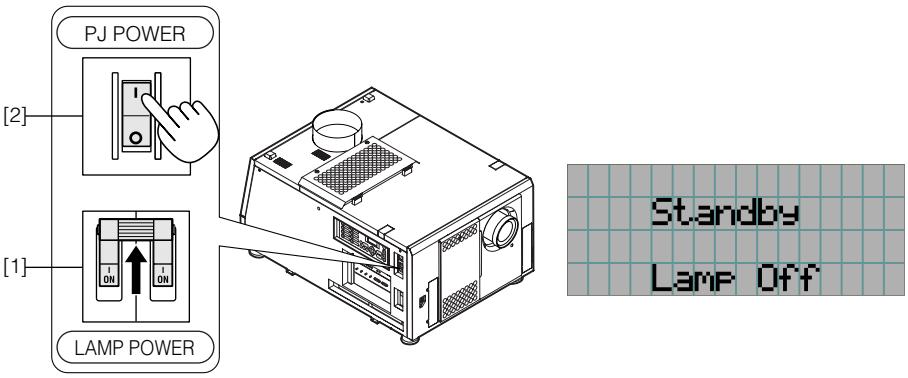

3 If KEY LOCK is on, press the KEY LOCK button for one second or longer.

KEY LOCK becomes off. The color of the KEY LOCK button changes from orange to white, and buttons on the control panel become operable. (See page 27)

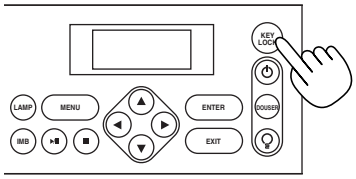

4 Press the POWER button on the control panel of your projector three seconds or longer.

Your projector is turn on, and the screen glows light about 30 seconds later. The status of the POWER button, DOUSER button, and LAMP ON/OFF button changes as follows.

POWER button	Lit green
DOUSER button	Lit green (douser is off)
LAMP ON/OFF button	Blinking white (lamp is off)
Button <1> to <8>	The button which was last selected is lit green

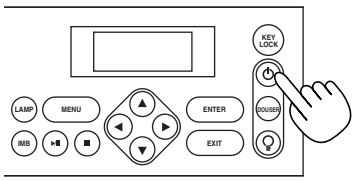

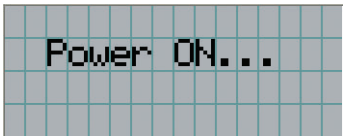

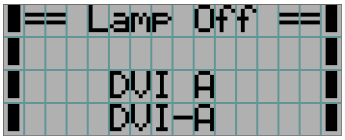

5 Press the LAMP ON/OFF button on the control panel for five seconds or longer.

The lamp is turned on and the screen glows light about 15 seconds later. The LAMP ON/OFF button lights green.
The douser is closed until the screen glows light (the DOUSER button blinks white). When the douser is open, the DOUSER button lights green.

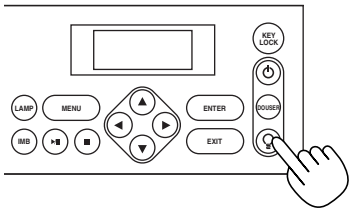

NOTE

- While your projector is on, be sure to have the lens cap removed from the lens.
  Otherwise, the lens cap may get deformed due to a heat buildup.
- In the following instances, the power to your projector cannot be turned on even if you press the POWER button.
  - When the inside temperature is abnormally high. The protective function prevents power from turning on. Wait some time (until the projector inside cools down) and then turn on the power.
  - When the Rear STATUS indicator is blinking without the lamp lighting up after power-on. Your projector may be in trouble. Check the error display on the LCD screen and contact your dealer/distributor for instructions.
- Note that the image may sometimes flicker until the lamp has stabilized (5 to 10 minutes) after power-on. This is due to the characteristics of the lamp and is not trouble of your projector.

3-3. Selecting the title of input signal

This projector allows you to select pre-registered signals using the signal selection buttons on the control panel (up to 8 signals). Request your dealer/distributor for details on registering and changing titles. This section explains the steps for selecting registered signals.

1 Turn on the power to the image devices connected to the projector.

2 Press the MENU button.

3 Press the LEFT/RIGHT button to display “Title Select” on the LCD screen.

At each press of the LEFT/RIGHT buttons, the display will cycle as “Title Select” ←→ “Configuration” ←→ “(Title Setup)” ←→ “Information.”

4 Press the DOWN button.

The title of the input signal is displayed.

- When you have made a wrong selection, press the UP button. A return will be made to the previous menu.

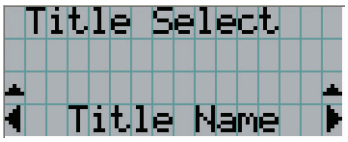

5 Press the LEFT/RIGHT buttons to display “Title of Signal to be Projected” on the LCD screen.

6 Press the ENTER button.

The title of the signal to be projected is selected.

- The (*) mark on the LCD indicates that this is the currently selected item.

3-4. Adjusting the position and the size of projected screen

3-4-1. Displaying the test pattern

1 Press the MENU button, or select a test pattern from signal selection buttons (button <1> to <8>).

If you register the test patterns to the signal selection buttons (<1> to <8> buttons), select the test pattern according to "3-3. Selecting the title of input signal (See page 22)".

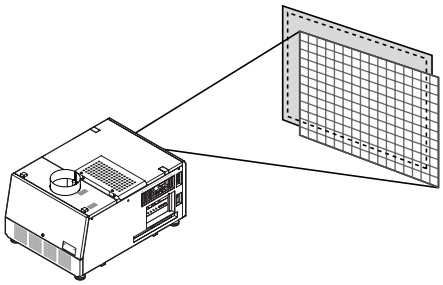

2 Press the LEFT/RIGHT button to display "Title Select" on the LCD screen.

3 Press the DOWN button.

The title of the input signal is displayed.

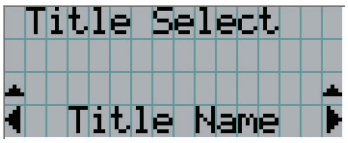

4 Press the LEFT/RIGHT button to display "TEST Pattern" on the LCD screen.

5 Press the DOWN button.

The LCD screen enters the mode where you can select a test pattern.

6 Press the LEFT/RIGHT button.

This switches the test pattern name displayed on the LCD screen.

7 Display on the LCD the name of the test pattern to be projected, then press the ENTER button.

The test pattern is displayed.

• To cancel the test pattern display, reselect the signal to be project.

3-4-2. Adjusting the position of the projected screen (Lens shift)

1 Press the MENU button.

2 Press the LEFT/RIGHT button to display “Configuration” on the LCD screen.

3 Press the DOWN button.

4 Press the LEFT/RIGHT button to display “Lens Control” on the LCD screen.

5 Press the DOWN button.

The screen (“Lens Position”) to adjust the position of the projected screen is displayed.

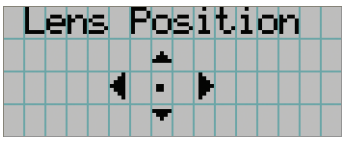

6 Press the UP/DOWN/LEFT/RIGHT button.

The position of the projected screen moves in the selected direction.

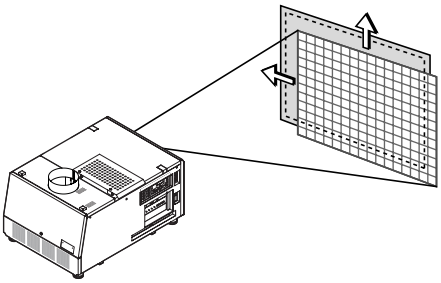

7 Press the EXIT button when adjustment is complete.

The display will return to a menu one level above (where “Lens Control” is displayed).

3-4-3. Fine adjustment of the size (zoom) and focus of the projected screen

1 Press the MENU button.

2 Press the LEFT/RIGHT button to display “Configuration” on the LCD screen.

3 Press the DOWN button.

4 Press the LEFT/RIGHT button to display “Lens Control” on the LCD screen.

5 Press the DOWN button.

The screen (“Lens Position”) to adjust the position of the projected screen is displayed.

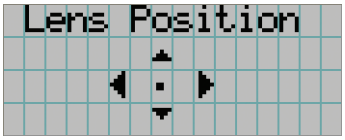

6 Press the ENTER button.

The screen to adjust the size and focus of the projected screen is displayed.
Press the ENTER button to switch the display between “Lens Position” and “Focus Zoom” adjustments.

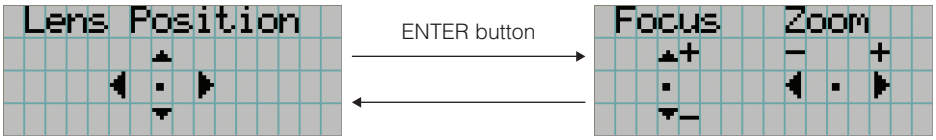

7 Adjust the size and focus of the projected screen.

Press the UP/DOWN button to adjust the focus.
Press the LEFT/RIGHT button for fine adjustment of the size.

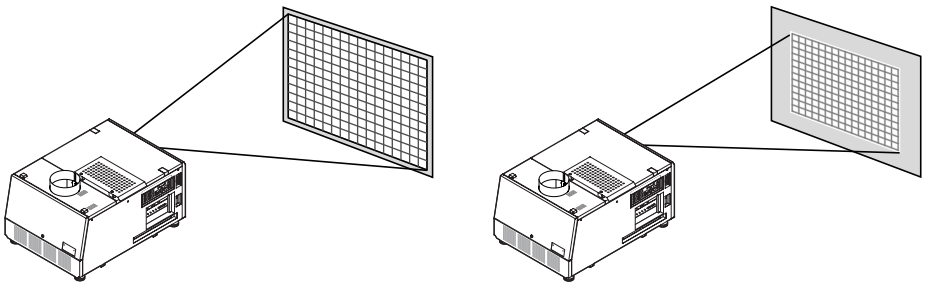

Focus
(UP/DOWN button)

Zoom
(LEFT/RIGHT button)

8 Press the EXIT button when adjustment is complete.

The display will return to a menu one level above (where “Lens Control” is displayed).

3-4-4. Adjusting the brightness of the projected screen (Lamp output)

1 Press the LAMP button.

"Lamp Setup" is displayed.

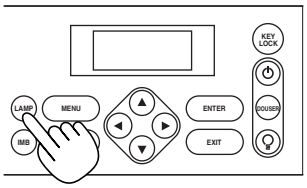

2 Press the DOWN button.

The screen to adjust the lamp output is displayed.

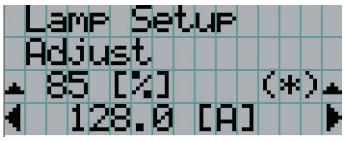

3 Press the LEFT/RIGHT button to adjust the lamp output.

4 Press the ENTER button.

The specified adjustment value is applied.

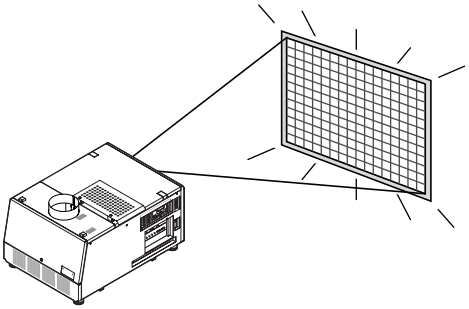

3-5. Preventing misoperations

Buttons on the control panel can be locked (KEY LOCK) to prevent misoperations. Buttons on the control panel do not function while KEY LOCK is on. KEY LOCK must be off to operate these buttons.

NOTE
- KEY LOCK is automatically turned on in the following cases.
  - When the projector has entered the standby state after turning on the lamp power switch and project power switch while the AC power is supplied.
  - When the projector has entered the standby state after turning off the power using the POWER button.
- The timing where KEY LOCK is turned on while the projector is in standby state depends on the “Auto Key Lock” setting in the adjustment menu.
  - When Auto Key Lock is enabled, KEY LOCK becomes automatically on if no control panel operation takes place in the standby state for 30 seconds. KEY LOCK becomes automatically on again even after KEY LOCK is turned off if no control panel operation takes place for 30 seconds.
  - When Auto Key Lock is disabled, KEY LOCK becomes automatically on when the projector enters the standby state; however, it stays off after KEY LOCK is turned off.

3-5-1. KEY LOCK setting

1 Press the KEY LOCK button on the control panel for one second or longer.

KEY LOCK becomes on. The KEY LOCK button lights orange.

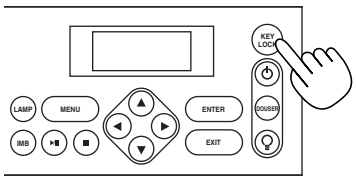

3-5-2. Turning KEY LOCK off

1 Press the KEY LOCK button for one second or longer while KEY LOCK is on.

KEY LOCK becomes off. The KEY LOCK button lights white.

3-6. Turning on/off the lamp with the projector turned on

3-6-1. Turning off the lamp

1 Press the LAMP ON/OFF button on the control panel for five seconds or longer.

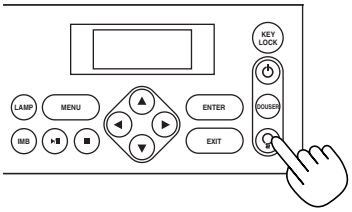

3-6-2. Turning on the lamp

1 Press the LAMP ON/OFF button on the control panel for five seconds or longer.

3-7. Turning your projector off

1 Press the POWER button on the projector control panel for three seconds or longer.

The lamp is turned off, the POWER button blinks white, and the Rear STATUS indicator blinks orange (cooling state).
The fan will continue to rotate while cooling, and the amount of time remaining for cooling is displayed on the LCD screen. The cooling-off time is 5 minutes.
When the cooling is finished, the POWER button lights white, and the Rear STATUS indicator lights orange (standby state). KEY LOCK becomes automatically on if no control panel operation takes place in the standby state for 30 seconds by default. Buttons on the control panel do not function while KEY LOCK is on. (See page 27)

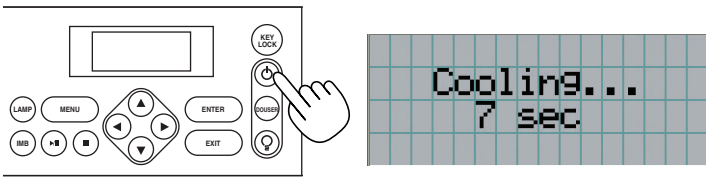

2 After the projector enters the standby state, turn off the projector power switch ([1]), then the lamp power switch ([2]).

The POWER button is turned off and the power for the projector and lamp is turned off.

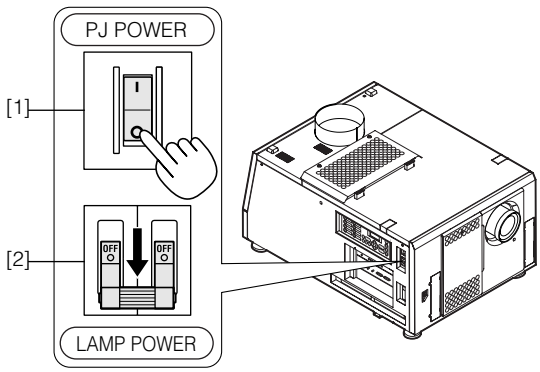

3 Turn off the AC power to the projector head.

NOTE
- Do not turn off the projector power switch or lamp power switch, or shut down the AC power to the projector in the following cases. Doing so can damage the projector.
  - While projecting images
  - While the fan is running after the power is turned off (The cooling-off time is 5 minutes)

4.
Using Menus

4-1. Basic operation with adjustment menus

To adjust the projector, display the menu on the LCD screen of the projector control panel.

4-1-1. Screen display

The menu display screen is composed of a menu display field (the upper two lines) and a setting item display field (the bottom two lines).

← Displays the main menu or submenus.
← Displays submenus or selection items.
← Displays settings and selection status.
← Displays settings, selected items and information on selected menus.

The meanings of symbols in the menu display screen are outlined below.

	Indicates that there is a menu of a higher level. Press the UP button to return to a menu one level above.
	Indicates that there is a selected item or menu at the same level. Press the LEFT/RIGHT button to display other selected items or menus.
	Indicates that there is a menu of a lower level. Press the DOWN button to display the menu one level below.
	Indicates that there are setting items of a lower level. Press the UP button to return to a menu one level above. Press the DOWN button to display the setting item one level below.

When not displaying menus, the following screen is normally displayed.

When in standby

When the projector is in a standby state (the projector power switch is on), the following is displayed.

When power is turned on

When the power is turned on, the following is displayed.

← Displays the hours of lamp bulb use.
← Displays the lamp output (%).
← Displays the selected title.
← Displays the selected port.

When the power is turned off

The amount of time remaining for cooling is displayed as shown below, when the power to the projector head is turned off.

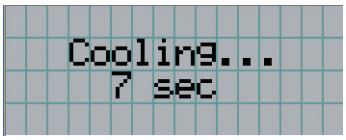

When a button is pressed while the key lock function is on

If a button on the control panel is pressed while the key lock function is on, the following is displayed and the button will not function.

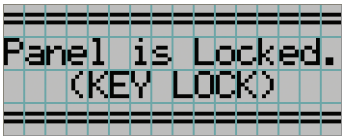

4-1-2. Operating menus

Preparation: Turn your projector on. (See page 20)

1 Press the MENU button on the control panel of your projector .

The menu is displayed in the LCD screen.

2 Press the LEFT/RIGHT buttons to display “Information.”

At each press of the LEFT/RIGHT buttons, the display will cycle as “Title Select” ←→ “Configuration” ←→ “(Title Setup)” ←→ “Information.”

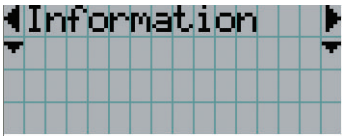

3 Press the DOWN button.

The submenu “Lamp” of “Information” is displayed.
The menu item can be selected by pressing the ENTER button instead of the DOWN button
To return to the previous state, press the UP button, or the EXIT button.

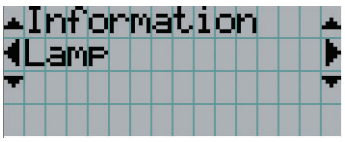

4 Press the LEFT/RIGHT button to select the submenu “Version.”

At each press of the LEFT/RIGHT button, the display will cycle as “Lamp” ←→ “Preset Button” ←→ “Usage” ←→ “Error Code” ←→ “Version” ←→ “IP Address” ←→ “Setup Date” ←→ “Option Status.”

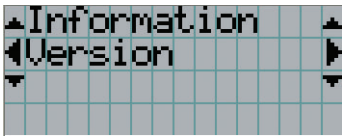

5 Press the DOWN button.

The submenu “System” another rank lower than “Version” is displayed.

6 Press the DOWN button.

The submenu “BIOS” another rank lower than “System” is displayed.

7 Press the LEFT/RIGHT button to select the submenu “Data.”

At each press of the LEFT/RIGHT button, the display will cycle as “BIOS” ←→ “Firmware” ←→ “Data” ←→ “Serial No.,” and each version information is displayed.

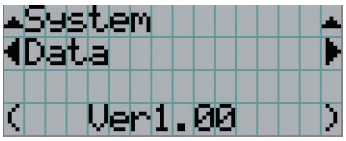

8 Press the UP button several times.

At each press of the UP button, the display will return to a menu one level above.

4-1-3. How to enter alphanumeric characters

Alphanumeric characters are entered for items, such as the title of input signal.
Characters can be entered by pressing numeric buttons on the control panel on this projector.

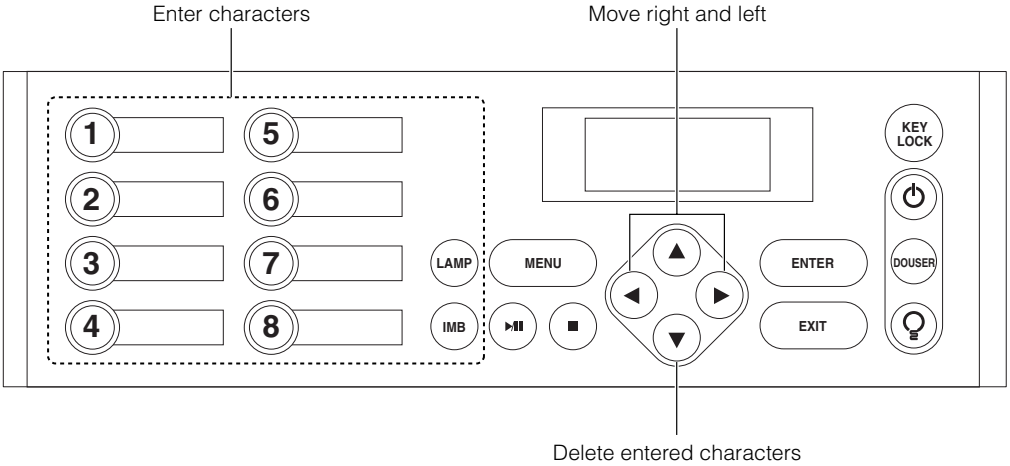

Characters can be entered by pressing each button as shown in the following table.

• To delete a character during entry, press the DOWN button.

[Example of Entry]

To enter “XGA” for example, use the following procedure:

(1) Press the “8” button three times.
V → W → X

(2) Press the RIGHT button.

(3) Press the “3” button.
XG

(4) Press the RIGHT button.

(5) Press the “1” button.
XGA

Button	Entered character
1	A → B → C → 1 → a → b → c → ! →
2	D → E → F → 2 → d → e → f → " →
3	G → H → I → 3 → g → h → i → # →
4	J → K → L → 4 → j → k → l → $ →
5	M → N → O → 5 → m → n → o → % →
6	P → Q → R → 6 → p → q → r → & →
7	S → T → U → 7 → s → t → u → ’ →
8	V → W → X → 8 → v → w → x → (→
LAMP	Y → Z → / → 9 → y → z → ? →) →
IMB	* → , → . → 0 → ; → : → + → - →

NOTE • To input characters using the remote control, only numbers can be entered with [password] and the security [keyword].

4-2. Table of adjustment menus

Menus in parentheses are menus for our service personnel. Normally, these menus cannot be used.

Main menu	Submenu		Description	Reference page
Title Select	"Title Memory Name"		Selects the title of the signal to be projected.	36
	TEST Pattern		Selects the test pattern to be projected.	36
Configuration	Lamp Setup	Adjust	Adjusts lamp brightness.	37
		Feedback	Sets the lamp brightness constant mode that uses a brightness sensor.	37
	Lens Control	Lens Position	Adjusts the position of the projected screen.	37
		Focus Zoom	Fine tunes the size and focus of the projected screen.	37
	(Setup)	Douser Mode	Selects whether to use the douser (screen mute) when switching signals.	-
		PowerOn Douser	Sets the douser status (ON/OFF) when the projector is turned on.	-
		Turret	Controls the turret mounted with an anamorphic lens (or wide converter lens).	-
		Panel Key Lock	Locks the buttons on the projector's control panel so that they cannot be operated.	-
		Auto Key Lock	Enables or disables Auto Key Lock.	-
		3D Connector	Sets the signal input terminal for a 3D image system (3D terminal or GPI/O terminal).	-
		FactoryDefault	Returns the settings to their default values. Selects between preset buttons and titles only, LAN settings only and all settings.	-
	(Installation)	(Option Slot)	Configures the device installed in slot A and slot B (only when the projector is in standby mode).	-
		Image Orient	Selects the projection method (front/rear).	-
		Lens Calibrate	Calibrate the Zoom and the Focus lens.	-
		Lens Center	Moves the lens shift position to the center.	-
		MMS Select	Selects the multi-media switcher (MMS) to connect.	-
		Baudrate	Sets the PC control connector (RS-232C) data transmission speed (bps).	-
		Date/Time	Sets the date and time on the projector.	-
		(New Bulb)	Resets the lamp bulb usage time and selects or edits new entries (only when the projector is in standby mode).	-
		(Bulb Warning)	Sets the lamp bulb warning time (only when the projector is in standby mode).	-
		(New Lamp house)	Resets the lamp house usage time, and makes settings or selects modes (only when the projector is in standby mode).	-
		Bulb Alignment	Sets the lamp bulb alignment.	-
		Usage Reset	Initializes the usage time of the fan and air filter.	-
		NewRouterSetup	Sets the router with the default settings when the router built-in the projector has been replaced.	-
	(Memory)	Lamp	Saves the current lamp setting.	-
		Lens	Saves the current lens setting.	-
(Title Setup)	Preset Button	Preset Button 1-8	Sets the title to be assigned to the preset buttons (<1> to <8> buttons).	38
Information	Lamp	Output	Displays the lamp output setting.	38
		Bulb Type [A]	Displays the registered name and the maximum/minimum current setting of the currently used lamp bulb.	38
		Bulb Type [W]	Displays the registered name and the lamp rated output (kW) of the currently used lamp bulb.	38
		Bulb Type [H]	Displays the registered name and the lamp bulb warning time (Bulb Warning Time) setting of the currently used lamp bulb.	38
	Preset Button	Preset Button 1-8	Displays the titles which are assigned to the preset buttons (<1> to <8> buttons).	39
	Usage		Displays the usage time of the projector, lamp bulb, lamp house, bulb warning, fan, and air filter.	39
	Error Code		Displays the currently occurring error.	39
	Version	System	Displays the model and version (BIOS, firmware, data, lens mount FW, and serial No.) of the projector.	40
		SIB	Displays the version of the signal input board (NC-80LB01).	40
		IMB	Displays the version of the media block (IMB).	40
		MMS(Built-in)	Displays the version of the built-in multi-media switcher (MMS). (BIOS, Firmware, Data, FPGA, and Serial No.)	40
	IP Address	System	Displays the IP address of the projector.	41
	Setup Date		Displays the date when the projector was set up (starting date of the warranty period).	41
	Option Status		Displays the link status of the device mounted in slot A and slot B, and the projector.	41

4-3. Title Select

4-3-1. Title select (Title Memory)

Selects the title of the signal to be projected.
You can register up to 100 titles. You can also assign registered titles to the preset buttons (<1> to <8> buttons) on the projector's control panel and call them up directly using those buttons.
Request your dealer/distributor for details on registering and changing titles.

← Displays the currently selected item with asterisk (*).
← Selects the title to be projected.

4-3-2. Test Pattern

Selects the test pattern to be projected.

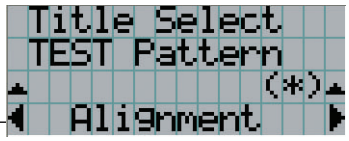

← Displays the currently selected item with asterisk (*).
← Selects the test pattern to be projected.

OFF, Alignment, Cross Hatch, Convergence, Red, Green, Blue, White, Black, White 50% [IRE], H-Ramp, Logo

4-4. Configuration

Please request your dealer/distributor to perform the settings.

4-4-1. Lamp Setup

Adjust

Adjusts the lamp output (brightness). Control the output at 10 W increments.

← Displays the lamp output (%) with regard to the setting.
← Adjusts the lamp brightness.

Feedback

Sets the lamp brightness constant mode that uses a brightness sensor.

← Displays the currently selected item with asterisk (*).
← Displays the setting.

Disable	Disables the lamp brightness constant mode.
Enable	Enables the lamp brightness constant mode.

4-4-2. Lens Control

Adjust the position, size, and focus of the projected screen.
Press the ENTER button to switch the display between “Lens Position” and “Focus Zoom” adjustments. Press the EXIT button to return to a menu one level above.

Lens Position

Adjusts the position of the projected screen.
The projected screen moves in the selected direction as you press the UP/DOWN/LEFT/RIGHT button.

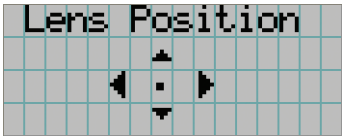

Focus Zoom

Fine tunes the size (Zoom) and focus (Focus) of the projected screen.
Press the UP/DOWN button to adjust the focus.
Press the LEFT/RIGHT button to adjust the size of the projected screen.

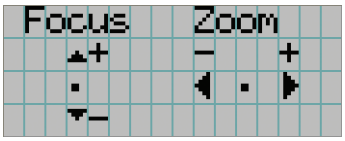

4-5. Title Setup

Sets the title to be assigned to the preset buttons (<1> to <8> buttons).
Request your dealer/distributor to perform the settings.

4-6. Information

Displays the hours of lamp bulb use, the version information and error codes.

4-6-1. Lamp

Displays information relating to the lamp. (Such as lamp output and the information of lamp bulb.)

Output

Displays the lamp brightness (output) setting.

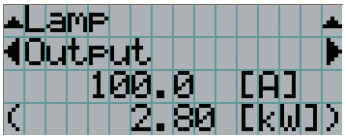

← Displays the set current (A).
← Displays the power consumption (kW).

Bulb Type [A]

Displays the registered name and the maximum/minimum current setting of the currently used lamp bulb.

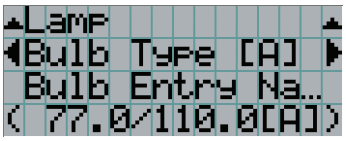

← Displays Bulb Entry registered name.
← Displays Bulb Entry maximum/minimum currents (A).

Bulb Type [W]

Displays the registered name and the lamp rated output (kW) of the currently used lamp bulb.

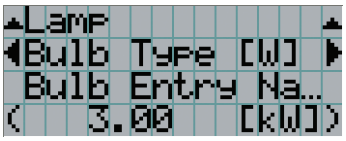

← Displays Bulb Entry registered name.
← Displays Bulb Entry lamp rated output (kW).

Bulb Type [H]

Displays the registered name and the lamp bulb warning time (Bulb Warning Time) and setting of the currently used lamp bulb.

← Displays Bulb Entry registered name.
← Displays Bulb Warning Time setting (H).

4-6-2. Preset Button

Sets the title to be assigned to the preset buttons (<1> to <8> buttons) on the projector's control panel.

← Selects the preset button number whose contents you want to display.
← Displays the assigned title numbers.
← Displays the registered names of the assigned titles.

4-6-3. Usage

Displays the hours of projector head, lamp, and lamp house usage, and warning display time of the lamp bulb.

← Selects the item to display.
← Displays the hours of use (H).

Projector	Displays the hours of projector head use.
Bulb	Displays the hours of use of the current lamp bulb (Lamp utilization time).
Lamp house	Displays the hours of use of the current lamp house.
Bulb Warning	Displays the currently enabled warning time. The following is displayed depending on the item set by the Bulb Warning setting. • When Use Bulb Entry is enabled: Displays the Bulb Entry value. • When in Manual setting: Displays the value set using Manual.
AC On Fan	Displays the usage time (on the AC power supply) of the projector cooling fan.
Power On Fan	Displays the usage time (on the projector's power supply) of the projector cooling fan.
Lamp Fan	Displays the usage time of the lamp cooling fan.
Filter	Displays the usage time of the air filters (for the projector head and for the lamp).

4-6-4. Error Code

Displays the error code when an error occurs. Contact your dealer/distributor for information on error codes.

← Displays the code of the error currently occurring.
← Displays the name of the error currently occurring.

When multiple errors occur, you can display them by pressing the LEFT/RIGHT buttons.

4-6-5. Version

Displays the versions of the projector head, and the multi-media switcher (MMS) (optional).

System

Displays the version information of the projector head.

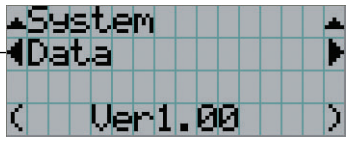

← Selects the item to display.

← Displays the version information.

BIOS	Displays the BIOS version of the projector head.
Firmware	Displays the firmware version of the projector head.
Data	Displays the data version of the projector head.
Lens	Displays the firmware version of the lens mount on the projector.
Serial No.	Displays the serial number of the projector head.
Model	Displays the model name of the projector head.

SIB

Displays version information of the signal input board (NC-80LB01).

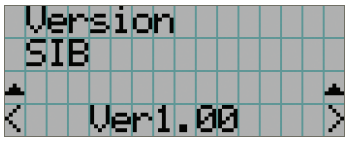

← Displays the version information.

IMB

Displays the version information of the media block (NC-80MB01).

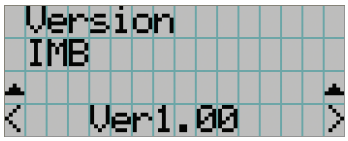

← Displays the version information.

MMS (Built-in)

Displays the version of the built-in multi-media switcher (MM3000B) connected to the projector head.

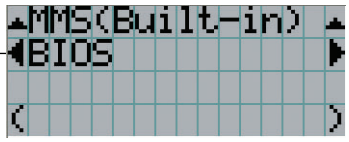

← Selects the item to display.

← Displays the version information.

BIOS	Displays the BIOS version of the built-in multi-media switcher (MM3000B).
Firmware	Displays the firmware version of the built-in multi-media switcher (MM3000B).
Data	Displays the data version of the built-in multi-media switcher (MM3000B).
FPGA	Displays the FPGA version of the built-in multi-media switcher (MM3000B).
Cfg FPGA	Displays the configuration FPGA version of the built-in multi media switcher (MM3000B).
Serial No.	Displays the serial number of the built-in multi-media switcher (MM3000B).

4-6-6. IP Address

Displays the IP address set in the projector head.

← Displays the IP address.

System	Displays the IP address set for the projector head (System).

4-6-7. Setup Date

Displays the date when the projector was set up (starting date of the warranty period).

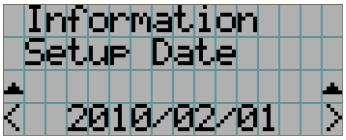

← Displays the date when the projector was set up (starting date of the warranty period).

4-6-8. Option Status

Displays the link status of the device mounted in slot A and slot B (signal input board, multi-media switcher, or media block) on the projector.
Normally the device name mounted in slot A and slot B are displayed. The device name is displayed in ( ) when the projector is in standby or when connection to the device cannot be confirmed.

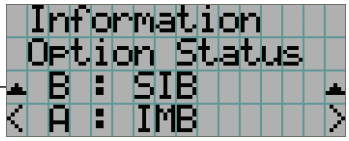

← Displays the link status of the device in slot B.
← Displays the link status of the device in slot A.

B	Displays the link status of the device in slot B. • SIB: Signal input board • MMS: Multi-media switcher • IMB: Media block • No Board: No device mounted
A	Displays the link status of the device in slot A. • IMB: Media block • No Board: No device mounted

5. Maintenance of Your Projector

NOTE Please request your dealer to perform lamp replacement and cleaning of the projector inside.

5-1. Cleaning the Cabinet

Be sure to always check that the AC power supply of the projector head is disconnected before carrying out maintenance of your projector.

- Wipe with a dry, soft cloth without nap.
  When the cabinet is excessively dirty, wipe with cloth well wrung after being dampened with a neutral detergent diluted with water and then finish up with a dry cloth.
  When you use a chemical dust cloth, follow the instructions in the manual attached to it.
- Do not use a solvent, such as thinner or benzene. The coating may deteriorate or peel off.
- When removing dust on the ventilation opening, suck it off using an adapter with a brush on a vacuum cleaner. Never allow the cleaner without an adapter to come into direct contact or use a nozzles adapter in cleaning.
- Clean the ventilation opening at regular intervals. Dust, if allowed to accumulate there, may cause heating inside, which leads to functional trouble. The interval, which can vary with the location of your projector, is about 100 hours.
- Do not damage the cabinet by scratching it or allowing hard objects to hit it. This can scratch the projector.
- Consult your dealer/distributor about cleaning the inside of the projector.

NOTE Do not allow insecticide or other volatile liquid to splash on the cabinet, lens or screen. Also, do not allow any rubber or plastic object to remain in contact with the cabinet for a long time. The coating may deteriorate or peel off.

5-2. Cleaning the Lens

Clean the lens the same way as with camera lens (using a commercially available camera blower or cleaning paper for glasses). Take care not to damage the lens when cleaning.

5-3. Replacing the Air Filter

Air filters are attached over the air inlet of the projector to prevent dust. Replace air filters periodically to maintain the projector's performance.

WARNING:

- When replacing air filters, turn off the projector and shut down the AC power to the projector using a circuit breaker.
- Dust in air filters will hinder ventilation of the projector, lead to a rise of the internal temperature and may cause a fire or malfunction.

NOTE

Please purchase the replacement air filter at your dealer/distributor. Specify NC-80AF01 (for the air inlet of the lamp) or NC-80AF02 (for the air inlet of the projector electric circuit) when you order.

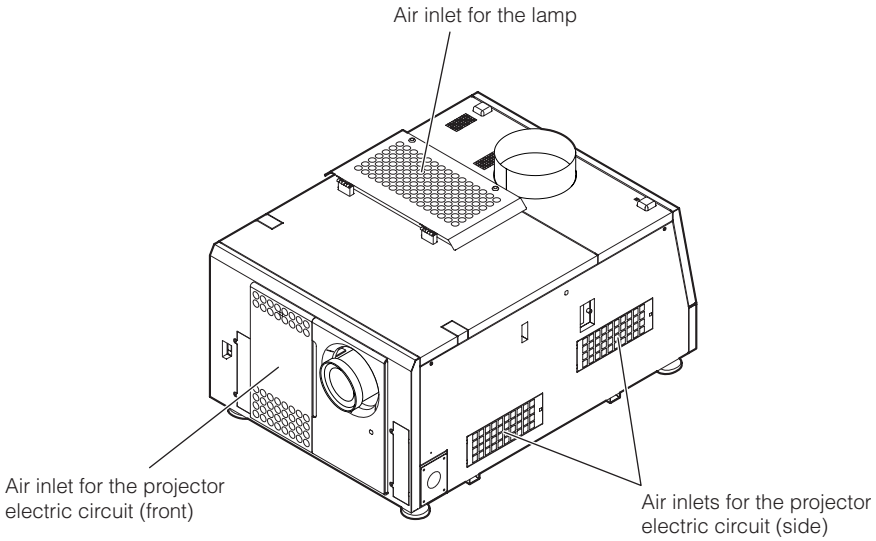

Air inlet	Model number	Replacement frequency
Lamp air inlet	NC-80AF01	When replacing the lamp
Projector air inlet	NC-80AF02	Every 2,000 hours of usage or 6 months, whichever is earlier

5-3-1. Replacing air filters for the lamp air inlet

Prepare the optional NC-80AF01 to replace air filters for the lamp air inlet. The NC-80AF01 contains six replacement air filters. Two air filters are required for the lamp air inlet.

1 Turn off the power to the projector.

2 Open the air inlet cover.

The air inlet cover is fastened by a leg on the top left corner of the cover when the project is facing towards you. Lift the leg up to open the air inlet cover.

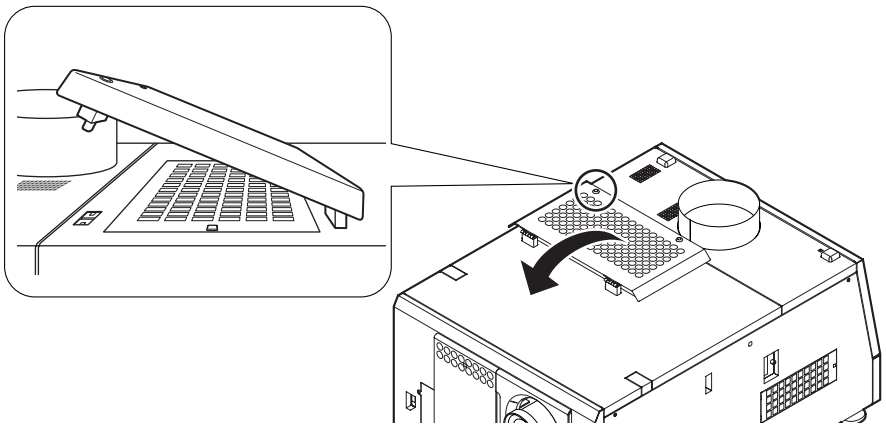

NOTE Take care not to damage the upper surface of the projector when opening the air inlet cover.

3 Remove the filter cover.

Push the latch until it clicks to unlock the filter cover.

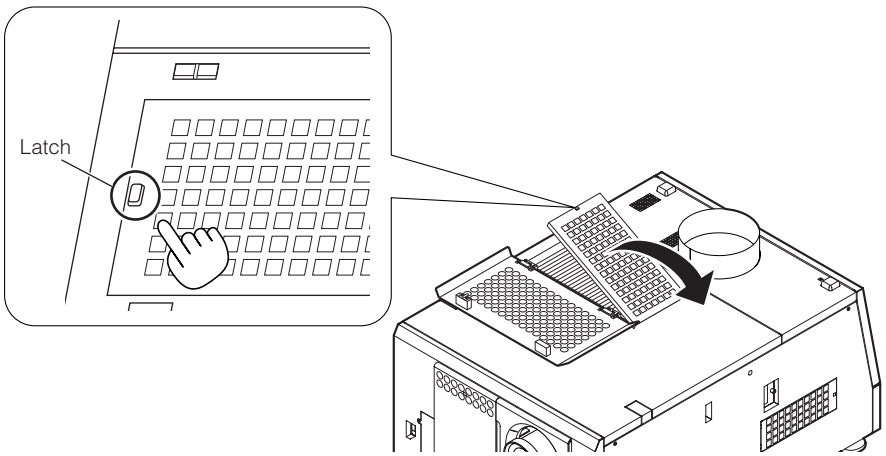

4 Replace with new air filters.

Look for an arrow indicating the installation direction on the side of the air filter. Place the filter so that the arrow is pointing down at the projector.

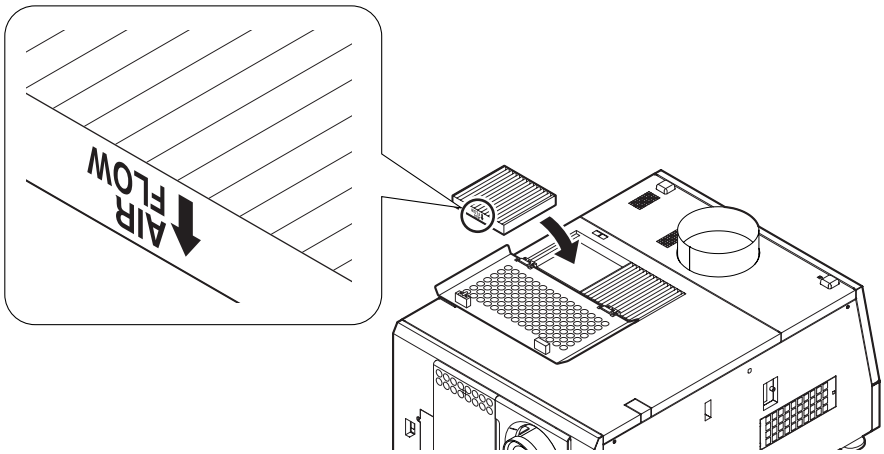

5 Mount the filter cover.

Align two fasteners on the filter cover to holes on the projector, and push in until the latch clicks to mount the filter cover.

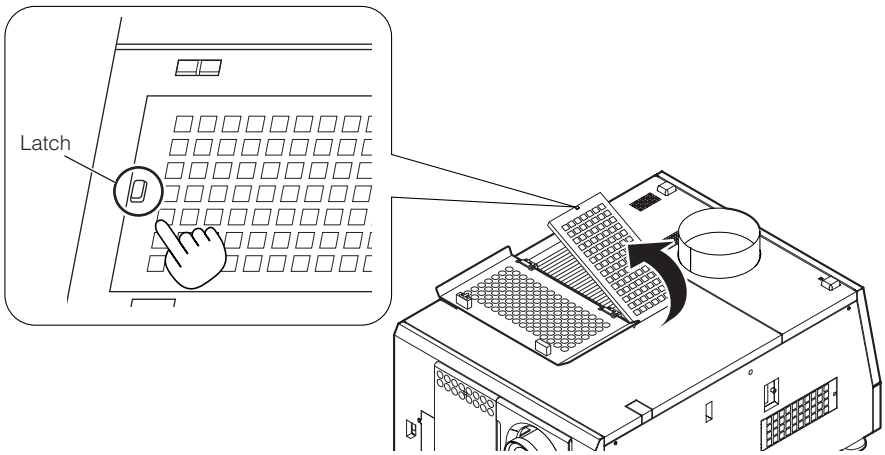

6 Close the air inlet cover.

Fasten the air inlet cover by inserting the protrusion on the top left leg into the hole on the projector when the projector is facing towards you.

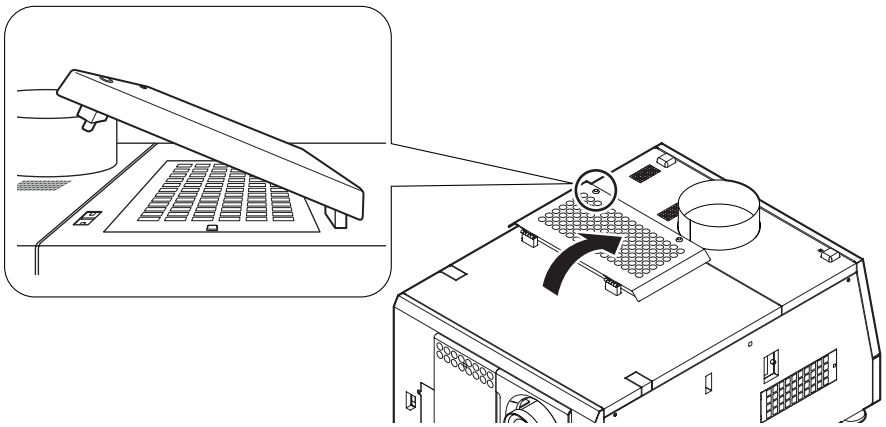

This completes replacement of the air filters for the lamp air inlet.

5-3-2. Replacing air filters for the projector air inlet on the front

Prepare the optional NC-80AF02 to replace air filters for the projector air inlet on the front. The NC-80AF02 contains four replacement air filters. Two air filters are required for the projector air inlet on the front.

1 Turn off the power to the projector.

2 Remove the air inlet cover.

Push the latch until it clicks to unlock the air inlet cover. The air inlet cover is attached to the projector by the bottom edge.

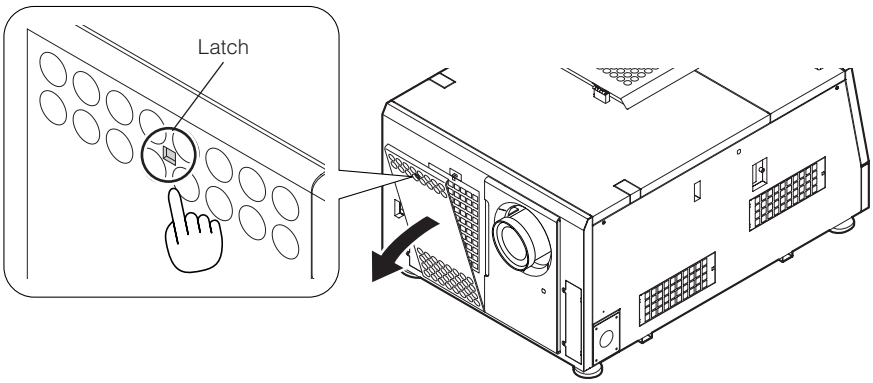

NOTE Take care not to drop the cover when removing the air inlet cover.

3 Remove the filter cover.

Push the latch until it clicks to unlock the filter cover.

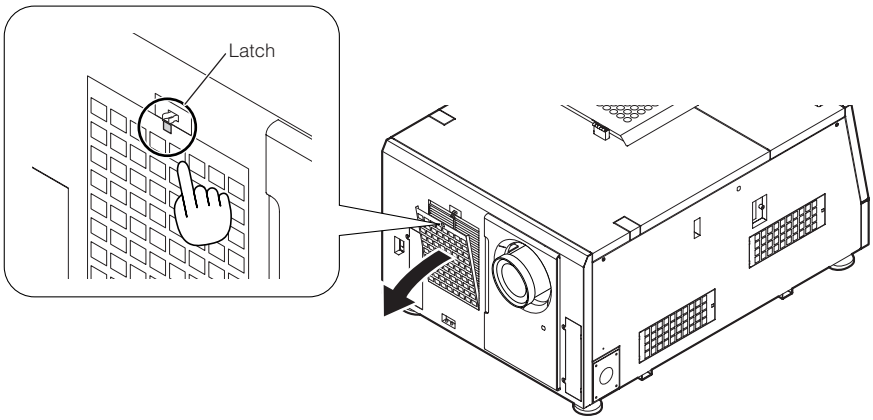

4 Replace with new air filters.

Look for an arrow indicating the installation direction on the side of the air filter. Place the filter so that the arrow is pointing down at the projector.

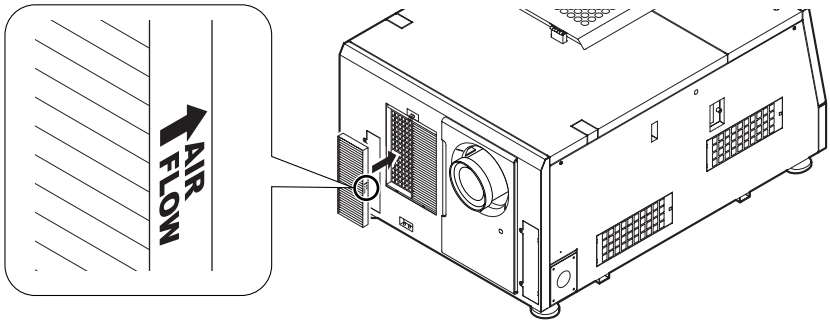

5 Mount the filter cover.

Align two fasteners on the filter cover to the holes on the projector, and push in until the latch clicks.

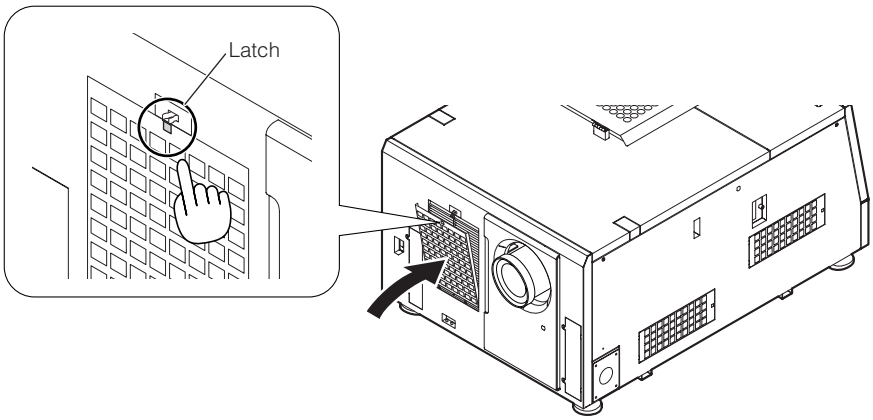

6 Mount the air inlet cover.

Align the catches on the bottom of the air inlet cover with the protrusions on the projector, and push in until the latch clicks to mount the air inlet cover.

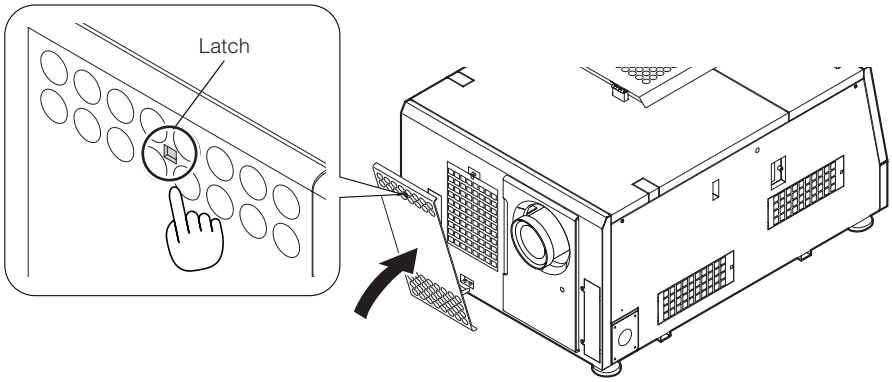

This completes replacement of the air filters for the projector air inlet on the front.

5-3-3. Replacing air filters for the projector air inlets on the side

Prepare the optional NC-80AF02 to replace air filters for the projector air inlets on the side. The NC-80AF02 contains four replacement air filters. Two air filters (one each for two air inlets) are required for the projector air inlets on the side.

1 Turn off the power to the projector.

2 Remove the filter cover.

Push the latch until it clicks to unlock the filter cover.

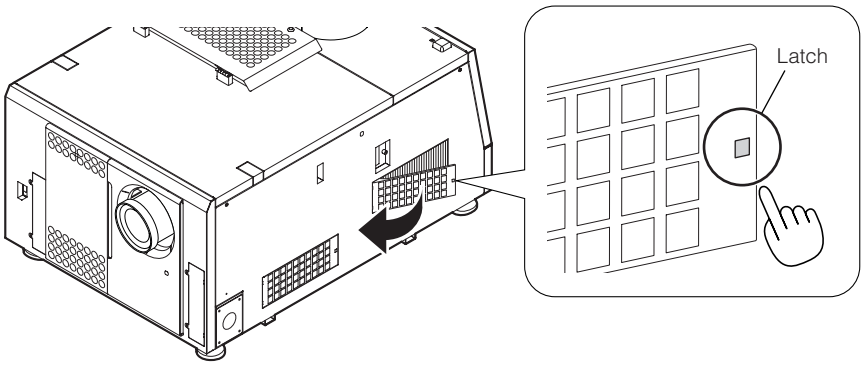

3 Replace with new air filters.

Look for an arrow indicating the installation direction on the side of the air filter. Place the filter so that the arrow is pointing down at the projector.

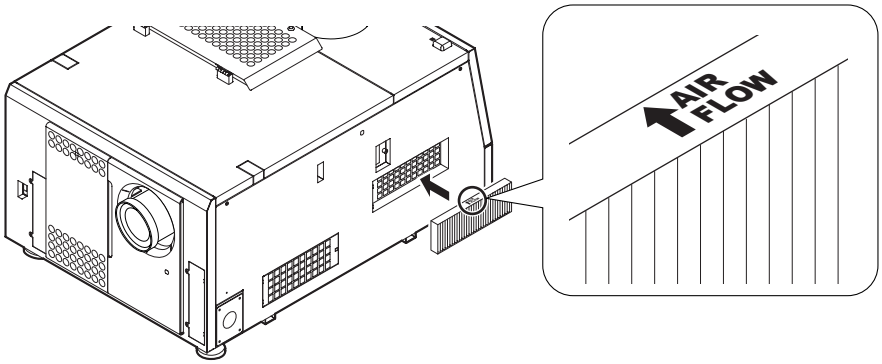

4 Mount the filter cover.

Align two fasteners on the filter cover to the holes on the projector, and push in until the latch clicks.

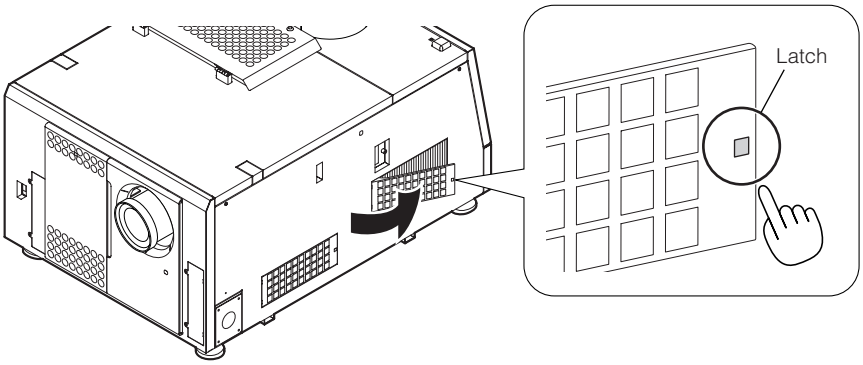

5 Repeat Step 2 to 4 to replace one more air filter.

This completes replacement of the air filters for the projector air inlets on the side.

6. Appendix

6-1. Troubleshooting

Before asking for repair, please check your connection, settings and operation once again. If the trouble cannot be corrected, please contact your dealer/distributor for instructions or repair.

6-1-1. Problems and where to check

Problem	Check these items
The projector cannot be turned on.	Check to see if AC power is supplied to the projector.
	Make certain that the projector power switch is ON.
	Check to see whether the panel key lock function is activated. If so, the main unit's control buttons are locked and do not work.
	Is the temperature inside the projector too high? When the inside temperature is too high, the protective function does not allow your projector to be turned on. Wait some time and then turn it on.
The image cannot be projected.	Check to see if the connected input has been selected.
	Check to see if a cable is properly connected to the input terminal.
	Check to see whether the douser is closed.
	Check to see if the settings are all adjusted properly.
The image is distorted.	Check to see if the protractor is properly set up.
The image is blurred.	Make certain that the lens is properly focused.
	Check to see if the screen and a projector are installed at correct angles.
	The projection distance may be larger than the focusing range.
	See if the lens and other parts have condensation on them. If the projector is turned on in a warm place after storage in a cold place, the lens and other optical components inside may develop condensation. In such a case, please wait several minutes until the condensation disappears.
Video image is disturbed	Check whether the signal cable connected to the projector is disconnected.

Problem	Check these items
The STATUS indicator blinks in red.	Your projector may have trouble. Please contact your dealer/distributor for instructions.
An error code is displayed.	Please contact your dealer/distributor for instructions.

6-2. Indicator display list

See the descriptions below when any of four buttons on the control panel or the Rear STATUS indicator on the rear of the projector is lit or blinking. The projector also has a warning function that uses a buzzer.

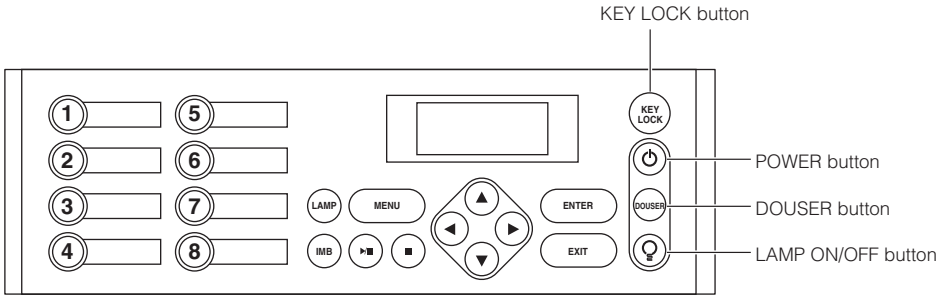

6-2-1. KEY LOCK button

Indicator condition		Projector condition	Note
Steady light	White	The key lock is off.	-
	Orange	The key lock is on.	-

6-2-2. POWER button

Indicator condition		Projector condition	Note
Off		The project power supply is off.	-
Blinking light	Green	The projector is starting up.	Wait for a moment.
	White	The projector is cooling down.	Wait for a moment.
Steady light	Green	The projector is turned on.	-
	White	The projector is in standby.	-

6-2-3. DOUSER button

Indicator condition		Projector condition	Note
Blinking light	White	The douser is closed.	-
Steady light	Green	The douser is opened.	-

6-2-4. LAMP ON/OFF button

Indicator condition		Projector condition	Note
Blinking light	White	The lamp is off.	-
Steady light	Green	The lamp is on.	-

6-2-5. Rear STATUS indicator

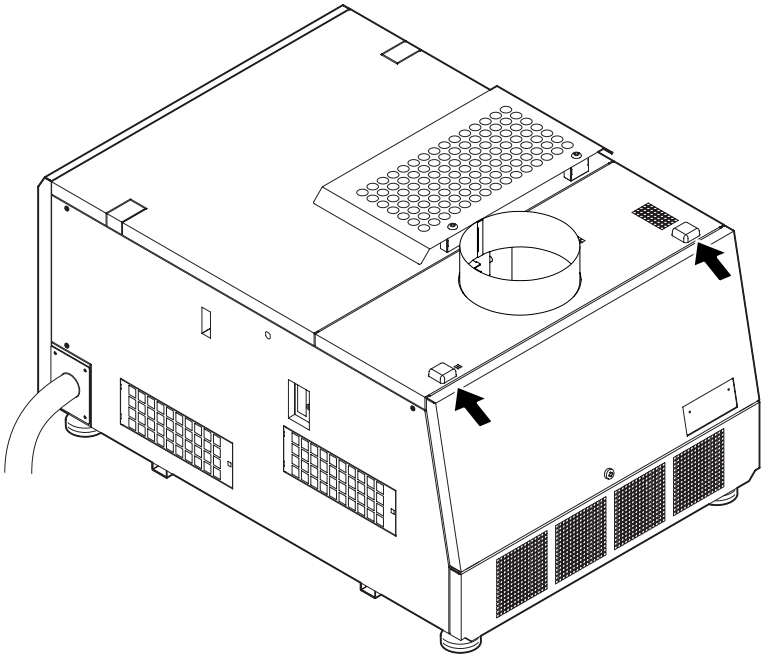

Indicator condition		Projector condition	Note
Off		Main power is off.	-
Blinking light	Green	The projector is getting ready to turn on. The douser is closed. The lamp is off.	Wait for a moment.
	Orange	The projector is cooling down.	Wait for a moment.
	Red (With buzzer)	Safety problem, error	An error message is displayed in the LCD screen. Check the content of the error.
	Red (Without buzzer)	Error with possible image project under certain conditions.	
Steady light	Green	The projector is turned on.	-
	Orange	The projector is in standby.	-
	Red	Error at a level with not affect on projection.	An error message is displayed in the LCD screen. Check the content of the error.

6-3. Operation using an HTTP browser

6-3-1. Overview

The use of HTTP server functions will allow control of the projector from a web browser. Please be sure to use " Microsoft Internet Explorer 4.x" or a higher version for the web browser.
This device uses "JavaScript" and "Cookies" and the browser should be set to accept these functions. The setting method will vary depending on the version of the browser. Please refer to the help files and the other information provided in your software.

NOTE

The display's or button's response can be slowed down or operation may not be accepted depending on the settings of your network.
Should this happen, consult your network administrator.
The projector may not respond if its buttons are repeatedly pressed in rapid intervals. Should this happen, wait a moment and repeat. If you still cannot get any response, pull out and then reinsert the LAN card on the projector.
Access is gained to the HTTP server functions by and specifying
http://<the projector's IP address>/index.html
in the entry column of the URL.

6-3-2. Preparation before use

Make network connections and set up the projector and confirm that it is complete before engaging in browser operations.
Operations with a browser that uses a proxy server may not be possible depending on the type of proxy server and the setting method. Although the type of proxy server will be a factor, it is possible that items that have actually been set will not be displayed depending on the effectiveness of the cache, and the contents set from a browser not be reflected in operation. It is recommended that a proxy server not be used unless it is unavoidable.

6-3-3. Handling of the address for operation via a browser

Regarding the actual address that is entered for the address or entered to the URL column when operation of the projector is via a browser, the host name can be used as it is with the host name corresponding to the IP address of the projector has been registered in the domain name server by a network administrator, or the host name corresponding to the IP address of the projector has been set in the "HOSTS" file of the computer being used.

(Example 1) When the host name of the projector has been set to "pj.nec.co.jp"

http://pj.nec.co.jp/index.html is specified for the address or the entry column of the URL to access HTTP server functions.

(Example 2) When the IP address of the projector is "192.168.10.10"

http://192.168.10.10/index.html is specified for the address or the entry column of the URL to access HTTP server functions.

6-3-4. Structure of the HTTP server

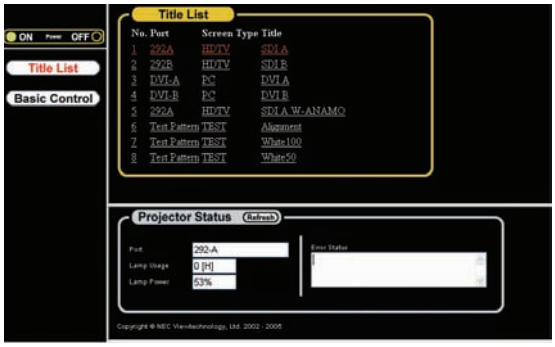

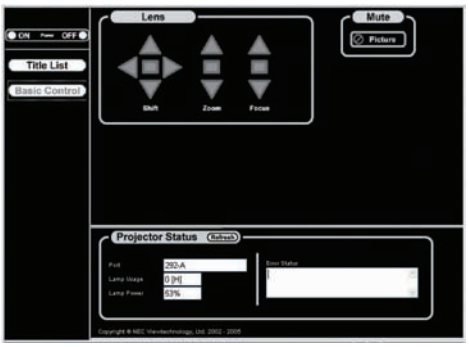

Power		Controls the power to your projector. • On: Turns the power on. • Off: Turns the power off.
Title List		Displays titles set in the projector (such as input port, screen type, and title). Check, and the title will be changed.
Basic Control		Displays the basic control items.
Lens		Controls the lens operation.
	Shift	▲ : Shifts the projected screen upward. ▼ : Shifts the projected screen downward. ◀ : Shifts the projected screen leftward. ▶ : Shifts the projected screen rightward. ■ : Stops the shifting. Shifting can also be stopped by clicking the same button one more time.
	Zoom	▲ : Zooms up the lens. ▼ : Zooms down the lens. ■ : Stops the zooming. Zooming the can also be stopped by clicking the same button one more time.
	Focus	▲ : Focuses up the lens. ▼ : Focuses down the lens. ■ : Stops the focusing. Focusing can also be stopped by clicking the same button one more time.
Mute	Picture	Click and the douser closes and the projected picture disappears. Click once again and the picture will be projected again.
Projector Status		Displays the condition of the projector. • Port: Displays the input port of the selected title. • Lamp Usage: Displays the hours of lamp use. • Lamp Power: Displays lamp output (%). • Error Status: Displays the status of errors occurring within the projector. • Refresh: Updates the display of the following conditions.

6-4. Outline Drawing

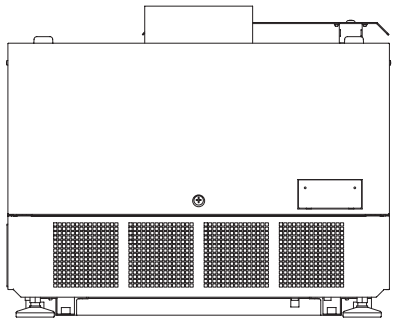

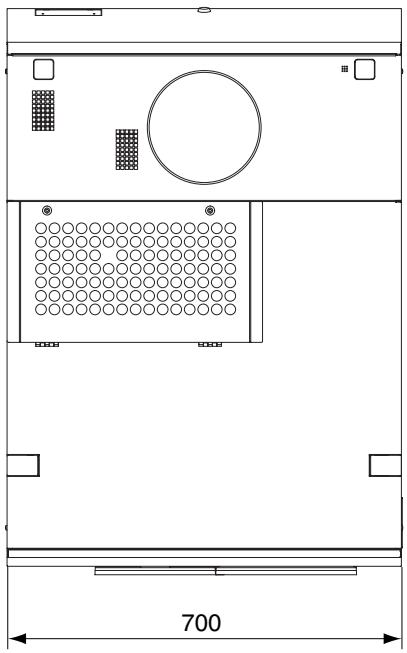

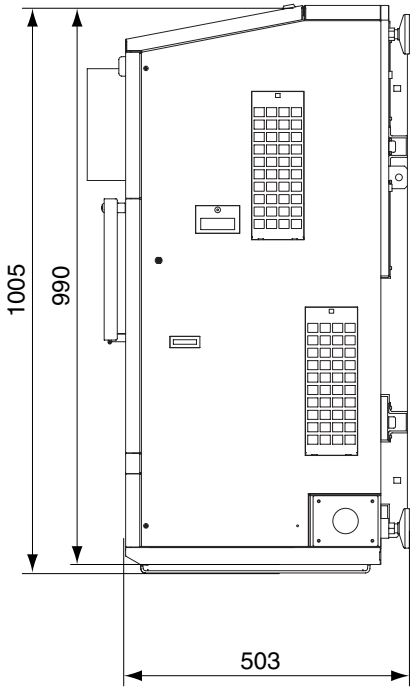

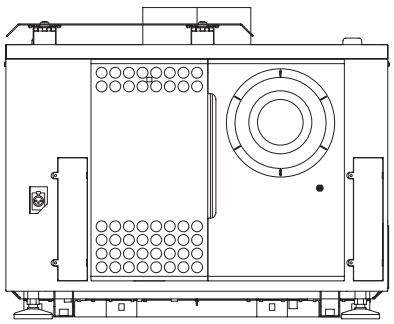

Units: mm

6-5. Specifications

Model No.	NC2000C	
Projection method	3 chip DLP Cinema® method (0.98-inch DC2K chip)	
Panel resolution	2048 x 1080	
Lamp type	4.0 kW xenon lamp (Note 1)	
Screen sizes	5 m to 20 m (Width) (Depends on setup conditions)	
Contrast ratio	2200:1 or above	
Lens adjustment function	Motorized lens shift (vertical/horizontal), motorized zoom, motorized focus, douser	
Signal input ports (Note 2)	Slot B	Signal input board (NC-80LB01) mounted as standard SDI (4) BNC (SMPTE 292M, 372M) RGB DIGITAL (2) DVI-D 24pin (TMDS specification)
	Slot A	When shipped from factory: Empty (for mounting optional components)
External Control	RS-232C D-sub 9 pin x 1 GPIO port D-sub 37 pin x 1 Remote control input port stereo mini jack x 1 3D CTL D-sub 15 pin x 1 USB Type A x 1 Interlock port x 1 Ethernet port G-bit RJ-45 x 1 Anamorphic Lens Turret control port x 1	
Power supply	For C1 connection (Note 3)	Single phase AC 200V-240V 50/60Hz 30A (projector power supply + lamp power supply)
	For C2 connection (Note 3)	Single phase AC 100V-240V 50/60Hz 5–2.5A (projector power supply) Single phase AC 200V-240V 50/60Hz 27A (lamp power supply)
Power consumption	5500W	
Cooling method	Cooling fluid system, Cooling air system (includes dust filter)	
Noise level	Less than 62 dB	
Installation	Orientation:Desktop/front, Desktop/rear	
Net weight	99 kg (Excluding lens)	
Dimensions	700 mm (W) x 990 mm (D) x 503 mm (H) (Does not include protruding portions Includes foot)	
Environment	Operating temperature: 10 to 35˚C Operating humidity: 10 to 85% (non-condensing) Storage temperature: -10 to 50˚C Storage humidity: 10 to 85%	
Regulations		<Safety> <EMC>
	USA	UL60950-1 FCC Class A
	Canada	CSA60950-1 ICES-003 Class A
	Europe	EN60950-1 EN55022 Class A EN55024
	Oceania	IEC60950-1 AS/NZS CISPR.22 Class A
	Japan	J60950 VCCI Class A
	Asia	IEC60950-1 CISPR. 22

(Note 1) Using any lamp other than NEC's optional lamps will result in lower brightness compared to NEC optional lamps. If brightness is important to you, it is recommended that you use NEC's optional lamps.
NEC will post information on its homepage regarding installable lamps, other than NEC's optional lamps. Note that NEC does not guarantee performance and reliability when lamps other than NEC's optional lamps are installed.

(Note 2) In addition to the input ports described above that are mounted when the device is shipped, Image Media Block and Multi Media Switcher are available as separate optional products. A wider variety of input interfaces can be supported by mounting these in slot A.

(Note 3) C1 connection is the case when the AC power to the projector power supply and the lamp power supply is provided by a single cable.
C2 connection is the case when the AC power to the projector power supply and the lamp power supply is provided by separate cables.

* Note that these specifications and design can change without prior notice.

6-6. Pin Assignment and Functions of Terminal

6-6-1. PC CONTROL connector (RS-232) (D-Sub 9 pin)

This is an RS-232C interface for controlling the projector head from a PC. The projector operates as a DCE (Data Communication Equipment), so use a straight cable when connecting to a PC.

Pin No.	RS-232C Signal Name	Functions as RS-232C	Projector Connector Operation
1	CD	Carrier detection	Not used (N.C.)
2	RXD	Reception data	Data transmission to an external device
3	TXD	Transmission data	Data reception from an external device
4	DTR	Data Terminal ready (Note 1)	Connection to 6 pins
5	GND	Signal GND	Signal GND
6	DSR	Data set ready (Note 1)	Connection to 4 pins
7	RTS	Transmission request	SYSTEM (Note 2): Hi-Z (Not used) CINEMA (Note 2): Hi-Z (Used)
8	CTS	Transmission available	SYSTEM (Note 2): Fixed at -6.5 V (Not used) CINEMA (Note 2): ± 10.5 V (Used: Depends on communication status)
9	RI	Ring indicator	Not used (N.C.)

Note 1: Do not use DTR and DSR signals when communicating.
Note 2: Connector operations vary according to the PC control signal switch (CINEMA/SYSTEM). (When in SYSTEM, do not use RTS and CTS signals.)

6-6-2. External control connector (GP I/O) (D-Sub 37 pin)

It is possible to control the projector with an external device and to control the external device from the projector using an external control connector (GPIO: General Purpose I/O Ports). Each pin is electrically separated from the projector internal circuits by a photo-coupler. 8 port input and 8 port output are available.
Please contact your dealer/distributor regarding how to use and to operate them.

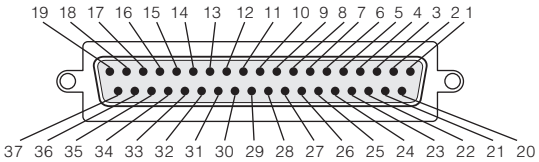

Pin view of female connector

Pin No.	Signal Name	I/O	Pin No.	Signal Name	I/O
1	GPIN1+ (3D L/R Input Reference +)	IN	20	GPIN1- (3D L/R Input Reference -)	IN
2	GPIN2+ (3D L/R Display Reference +)	IN	21	GPIN2- (3D L/R Display Reference -)	IN
3	GPIN3+ (system reserved)	IN	22	GPIN3- (system reserved)	IN
4	GPIN4+ (system reserved)	IN	23	GPIN4- (system reserved)	IN
5	EXT_GPIN1+ (Control and Title Selection +)	IN	24	EXT_GPIN1- (Control and Title Selection -)	IN
6	EXT_GPIN2+ (Control and Title Selection +)	IN	25	EXT_GPIN2- (Control and Title Selection -)	IN
7	EXT_GPIN3+ (Control and Title Selection +)	IN	26	EXT_GPIN3- (Control and Title Selection -)	IN
8	EXT_GPIN4+ (Control and Title Selection +)	IN	27	EXT_GPIN4- (Control and Title Selection -)	IN
9	GPOUT1+ (External 3D L/R Output Reference +)	OUT	28	GPOUT1- (External 3D L/R Output Reference -)	OUT
10	GPOUT2+ (system reserved)	OUT	29	GPOUT2- (system reserved)	OUT
11	GPOUT3+ (system reserved)	OUT	30	GPOUT3- (system reserved)	OUT
12	GPOUT4+ (Internal 3D L/R Output Reference +)	OUT	31	GPOUT4- (Internal 3D L/R Output Reference -)	OUT
13	EXT_GPOUT1+ (Projector Ready/Busy +)	OUT	32	EXT_GPOUT1- (Projector Ready/Busy -)	OUT
14	EXT_GPOUT2+ (Projector Error Status +)	OUT	33	EXT_GPOUT2- (Projector Error Status -)	OUT
15	EXT_GPOUT3+ (IMB Play/End Status +)	OUT	34	EXT_GPOUT3- (IMB Play/End Status -)	OUT
16	EXT_GPOUT4+ (Projector Heartbeat +)	OUT	35	EXT_GPOUT4- (Projector Heartbeat -)	OUT
17	NC (not connected)	-	36	NC (not connected)	-
18	GND	PWR	37	GND	PWR
19	GND	PWR	-	-	-

EXT_GPIN1 - EXT_GPIN4: You can control the projector externally by combinations of input signals (high/low). (Projector power supply/lamp power supply/image mute/title selection)

EXT_GPOUT1 - EXT_GPOUT4: Functions in the above table are default settings. You can change the assigned functions.

Input Connector

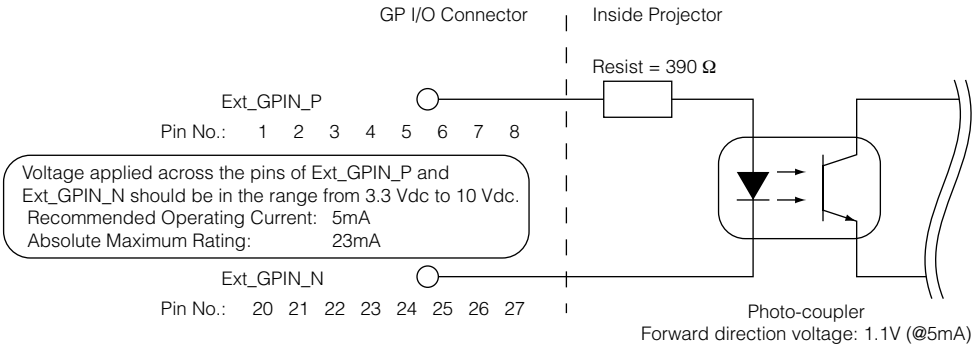

• Using GPIO Control

Momentary "ON" pulse enables you to control projector. To enable "ON" pulse, hold it for at least 500 ms. Hold "OFF" for at least 500 ms before "ON". (See page 61)

Here is function list to control projector by using GPIO port.

Pin No.	Photo-coupler ON/OFF				Function
1-20	ON/OFF				3D L/R timing signal input ON/OFF
2-21	ON/OFF				3D L/R display timing signal input ON/OFF
3-22	-				System reserved (used internally)
4-23	-				System reserved (used internally)
5-24 6-25 7-26 8-27	8-27	7-26	6-25	5-24	The following functions apply depending on the combination of input terminals.
	OFF	OFF	OFF	ON	Power ON
	OFF	OFF	ON	OFF	Power OFF
	OFF	OFF	ON	ON	Lamp ON
	OFF	ON	OFF	OFF	Lamp OFF
	OFF	ON	OFF	ON	Image douser ON
	OFF	ON	ON	ON	Image douser OFF
	OFF	ON	ON	ON	System reserved (used internally)
	ON	OFF	OFF	OFF	Selects the title registered to the preset button 1
	ON	OFF	OFF	ON	Selects the title registered to the preset button 2
	ON	OFF	ON	OFF	Selects the title registered to the preset button 3
	ON	OFF	ON	ON	Selects the title registered to the preset button 4
	ON	ON	OFF	OFF	Selects the title registered to the preset button 5
	ON	ON	OFF	ON	Selects the title registered to the preset button 6
	ON	ON	ON	OFF	Selects the title registered to the preset button 7
	ON	ON	ON	ON	Selects the title registered to the preset button 8

Example for dousing image: Input ON to 5-24 and 7-26 while 6-25 and 8-27 are OFF.

Example for selecting the preset button 2: Input ON to 5-24 and 8-27 while 6-25 and 7-26 are OFF.

NOTE
- The operation command coming from GPI/O port will be canceled when the projector is processing other tasks, such as lamp cooling and switching title.
- Set all other pins than those in use to "OFF".
- The operation command is executed upon continuous input of the "ON" pulse for approximately 200 ms.

• Timing chart of GPIO control

Example of Select Preset Button

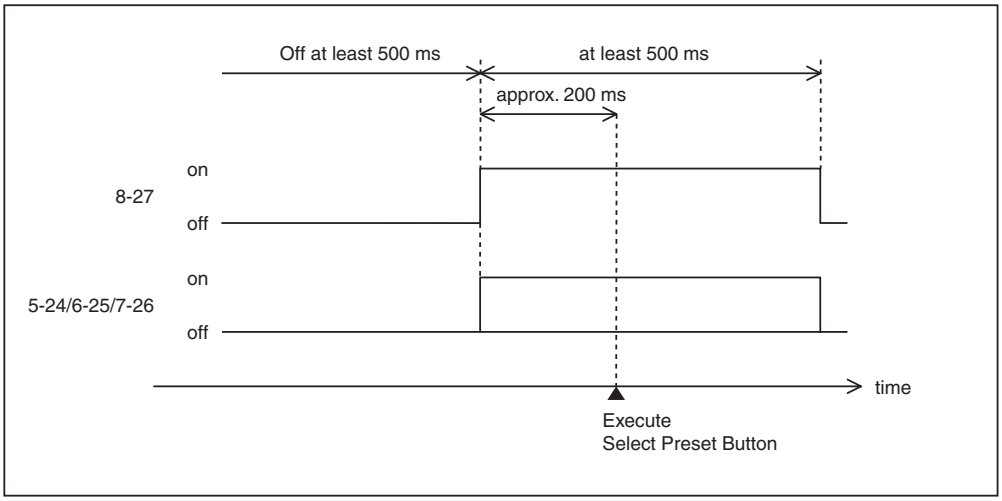

Example for turning the image douser (Douser) on

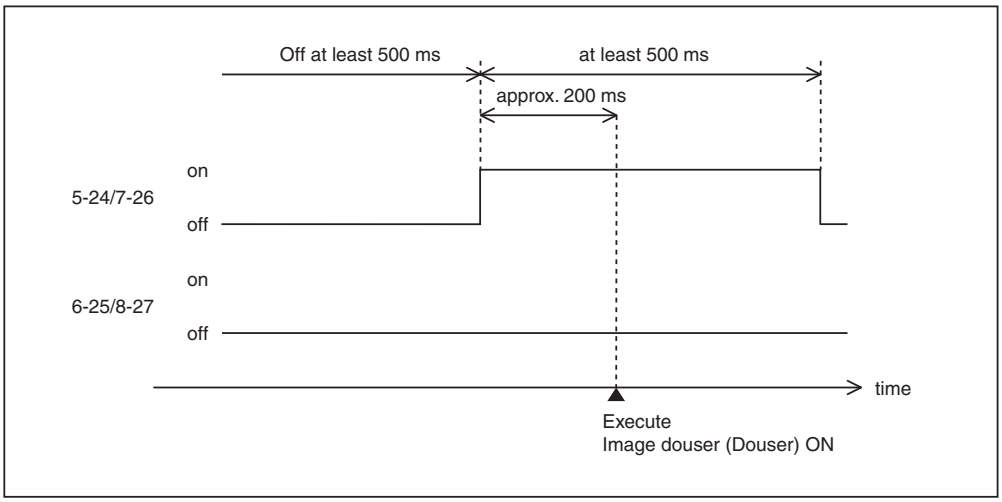

Example of Lamp On

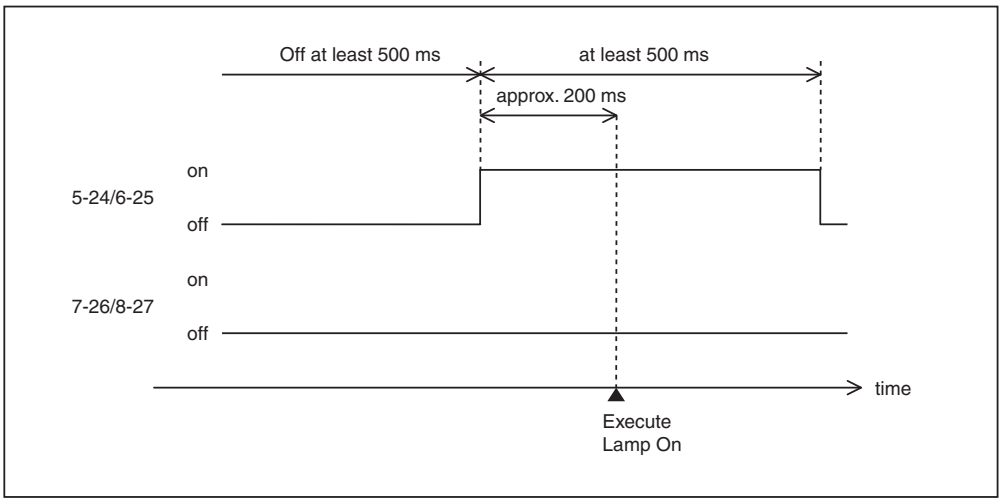

Example for turning the power off

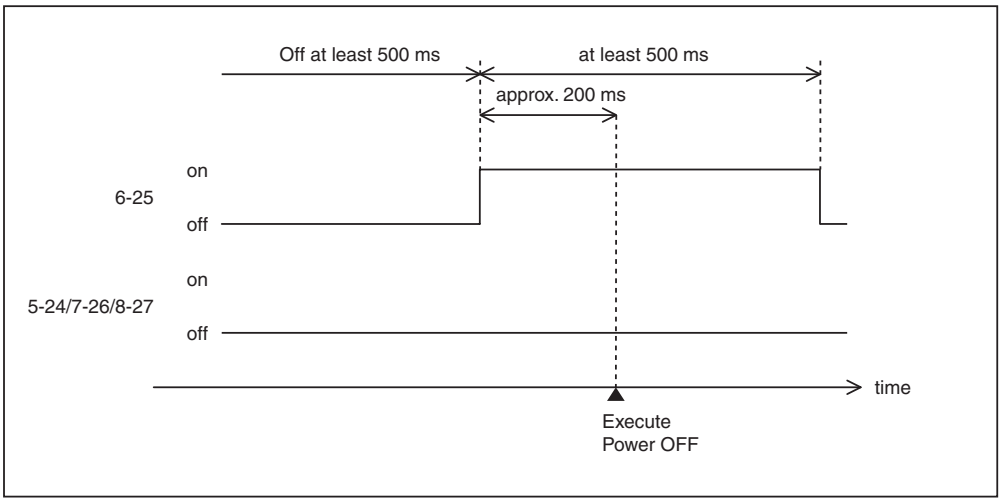

Output Connector

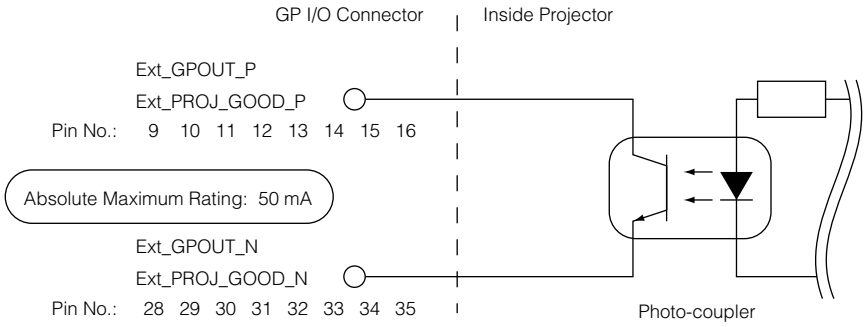

• Using GPIO Control

You can use GPIO control for the projector's health check and error check. Also, you can use the output as the trigger to control external devices.

The following functions are assigned to the pin number 13-32, 14-33, 15-34, and 16-35 (EXT_GPOUT1 - EXT_GPOUT4) as the default. You can change the assigned functions.

Pin No.	Photo-coupler ON/OFF	Function
9-28	ON/OFF	External 3D L/R timing signal output ON/OFF
10-29	–	System reserved (used internally)
11-30	–	System reserved (used internally)
12-31	ON/OFF	Internal 3D L/R timing signal output ON/OFF
13-32	ON/OFF	GPIO control status check ON: GPIO control (input) is unavailable. OFF: GPIO control (input) is available.
14-33	ON/OFF	Error check ON: Error OFF: No error
15-34	ON/OFF	Media block status check ON: The content is being played OFF: The content is stopped/paused
16-35	ON/OFF	Health check (heart beat) ON and OFF are alternately output when operations are normal.

6-6-3. 3D connector (D-sub 15 pin)

This is used to connect a 3D image system to the projector.

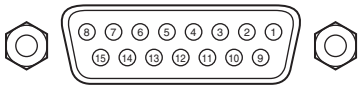

Pin view of a female connector

Pin No.	Signal Name	I/O	Function
1	+12V	PWR	Supplies power (+12V) to the 3D image system
2	GNDC	GND	Ground
3	GNDC	GND	Ground
4	RS232_RX	IN	Data transmission from the 3D image system (1200 Baud, 8 bits, No Parity)
5	RS232_TX	OUT	Data transmission to the 3D image system (1200 Baud, 8 bits, No Parity)
6	CONN_3D_MODE+	OUT	3D mode status (+) (Connects to the collector of the output transistor of the photo coupler inside the projector)
7	CONN_SYNC+	OUT	3D L/R switching timing signal (+) (Connects to the collector of the output transistor of the photo coupler inside the projector)
8	3D_INPUT_REFERENCE+	IN	3D L/R timing signal (+) (Connects to the anode of the input diode of the photo coupler inside the projector)
9	+12V	PWR	Supplies power (+12V) to the 3D image system
10	3D_INPUT_REFERENCE–	IN	3D L/R timing signal (–) (Connects to the cathode of the input diode of the photo coupler inside the projector)
11	3D_DISPLAY_REFERENCE+	IN	3D L/R display timing signal (+) (Connects to the anode of the input diode of the photo coupler inside the projector)
12	3D_DISPLAY_REFERENCE–	IN	3D L/R display timing signal (–) (Connects to the cathode of the input diode of the photo coupler inside the projector)
13	CONN_3D_MODE–	OUT	3D mode status (–) (Connects to the emitter of the output transistor of the photo coupler inside the projector)
14	CONN_SYNC–	OUT	3D L/R switching timing signal (–) (Connects to the emitter of the output transistor of the photo coupler inside the projector)
15	N/C	–	Unused

6-6-4. SDI-A, SDI-B, SDI-C, SDI-D (HD-SDI input connector) (BNC)

This is a signal input connector (SMPTE 292/HDSDI) for CINEMA.
The SMPTE 292/HD-SDI transfers HDTV signals with 1.5 GHz digital serial signals, so use a 75 coaxial cable having a thickness and characteristics higher than 5C-FB, and use a BNC for the connector.

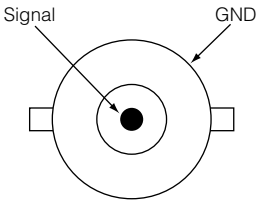

6-6-5. DVI-A, DVI-B (DVI digital Input connector) (DVI-D 24 pin)

This is a single link DVI input connector that is compliant with hot plug detect (HPD). Use a single link cable. Noise may be generated in the video if you use a dual link cable.
EDID is available even when the projector is switched off.

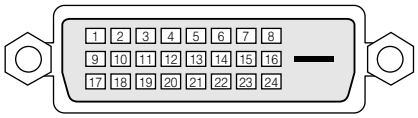

Pin view of female connector

Pin No.	Signal Name	Pin No.	Signal Name
1	TMDS Data 2-	13	unused
2	TMDS Data 2+	14	+5V Power
3	TMDS Data 2 Shield	15	Ground
4	Unused	16	Hot Plug Detect*
5	Unused	17	TMDS Data 0-
6	DDC Clock	18	TMDS Data 0+
7	DDC Data	19	TMDS Data 0 Shield
8	Unused	20	unused
9	TMDS Data 1-	21	unused
10	TMDS Data 1+	22	TMDS Clock Shield
11	TMDS Data 1 Shield	23	TMDS Clock+
12	Unused	24	TMDS Clock-

6-7. Related products list

Product name		Model name
Lens	Zoom Lens 1.30 to 1.75:1	NC-60LS13Z
	Zoom Lens 1.40 to 2.05:1	NC-60LS14Z
	Zoom Lens 1.59 to 2.53:1	NC-60LS16Z
	Zoom Lens 1.90 to 3.25:1	NC-60LS19Z
	Zoom Lens 2.4 to 3.9:1	NC-60LS24Z
	Zoom Lens 3.9 to 6.52:1	NC-60LS39Z
	Wide Converter Lens X 1.26	NC-80LS13F
Anamorphic lens motorized turret	Anamorphic turret	NC-AT02
Lamp	4.0kW Lamp	NC-16LP401
	4.0kW Lamp (Long life type)	NC-16LP402
	4.0kW Lamp	NC-16LP401S
Dedicated base	Pedestal	NC-PD02
Replacement air filter	Air Filter (For the lamp)	NC-80AF01
	Air Filter (For the projector)	NC-80AF02
Rear ventilation unit	Rear Duct Unit	NC-16RD02
Built-in type multi-media switcher	Built-in type Multi-Media Switcher	MM3000B
Interface board (DVI HDCP)	DVI (HDCP) Input Board	MM-70DV01
Interface board (SDI)	SDI Input Board	MM-SDI
Interface board (RGB)	Analogue RGB Input Board	MM-RGB
Interface board (VIDEO)	Video Input Board	MM-VIDEO

[MEMO]

Ver.1 01/10

NEC

DLP Cinema® Projector

NC2000C/NC2000C+

Important Information

English

Deutsch

Français

中文

日本語

Turkish RoHS information relevant for Turkish market

EEE Yönetmeliğine Uygundur.

DLP Cinema® Projector

NC2000C

Important Information

English

Deutsch

Français

中文

日本語

How to Use the Supplied User Documents

Two user documents are included with the projector.

Important Information

- First read Important Information. It covers information about projector safety, cautions and troubleshooting.

User's Manual on CD-ROM

- The complete user's manual is supplied on the CD-ROM in PDF (Portable Document Format) and provides detailed product and usage information for your NEC projector.
  The manual is available in five languages (English, German, French, Simplified Chinese and Japanese).
  To view or print the PDF files Adobe Acrobat Reader™ or Adobe Reader™ is required.

NOTE: Adobe Reader can be downloaded from Adobe's website.
Visit http://www.adobe.com and obtain the current version for your OS.

- To view the user's manual (PDF)

  [Windows]

  1. Place the supplied CD-ROM in your computer's CD-ROM drive.
  2. Double-click the [My Computer] icon on the Windows desktop.
  3. Double-click the [NECPJ-UM] CD-ROM icon.
  4. Double-click [start_menu.pdf].
     - Adobe Acrobat Reader or Adobe Reader will start and allow you to view the Start Menu.
  5. Click [User's Manual].
     The User's Manual will be displayed.

  [Macintosh]

  1. Place the supplied CD-ROM in your Macintosh's CD-ROM drive.
  2. Double-click the [NECPJ-UM] CD-ROM icon on your Macintosh's Desktop.
  3. Double-click [start_menu.pdf].
     - Adobe Acrobat Reader or Adobe Reader will start and allow you to view the Start Menu.
  4. Click [User's Manual].
     The User's Manual will be displayed.

- To copy the User's Manual (PDF) to your computer:

  The user's manuals on the supplied CD-ROM can be copied to your computer hard drive.
  From the supplied User's Manual CD-ROM, select [manual] → [English] → [NC2000C_manual_E.pdf] and copy it to your computer hard drive.

See the User's manual (PDF format) on the supplied CD-ROM for detailed information.

Important Information

Precautions:

Please read this manual carefully before using your NC2000C and keep the manual handy for future reference.

Important Safeguards

These safety instructions are to ensure the long life of your projector and to prevent fire and shock. Please read them carefully and heed all warnings.

⚠ **WARNING**
TO PREVENT FIRE OR SHOCK HAZARDS, DO NOT EXPOSE THIS UNIT TO RAIN OR MOISTURE.

⚠ **CAUTION**
TO REDUCE THE RISK OF ELECTRIC SHOCK, DO NOT OPEN COVER. NO USER-SERVICEABLE PARTS INSIDE. REFER SERVICING TO QUALIFIED SERVICE PERSONNEL.

This symbol warns the user that uninsulated voltage within the unit may have sufficient magnitude to cause electric shock. Therefore, it is dangerous to make any kind of contact with any part inside of this unit.

This symbol alerts the user that important literature concerning the operation and maintenance of this unit has been included. Therefore, it should be read carefully in order to avoid any problems.

CAUTION

- In order to reduce any interference with radio and television reception use a signal cable with ferrite core attached. Use of signal cables without a ferrite core attached may cause interference with radio and television reception.
- This equipment has been tested and found to comply with the limits for a Class A digital device, pursuant to Part 15 of the FCC Rules. These limits are designed to provide reasonable protection against harmful interference when the equipment is operated in a commercial environment. This equipment generates, uses, and can radiate radio frequency energy and, if not installed and used in accordance with the instruction manual, may cause harmful interference to radio communications. Operation of this equipment in a residential area is likely to cause harmful interference in which case the user will be required to correct the interference at his or her own expense.

WARNING

This is a Class A product. In a domestic environment this product may cause radio interference in which case the user may be required to take adequate measures.

DOC compliance Notice

This Class A digital apparatus meets all requirements of the Canadian Interference-Causing Equipment Regulations.

Machine Noise Information Regulation - 3. GPSGV,

The highest sound pressure level is less than 70 dB (A) in accordance with EN ISO 7779.

Disposing of your used product

EU-wide legislation as implemented in each Member State requires that used electrical and electronic products carrying the mark (left) must be disposed of separately from normal household waste.
This includes projectors and their electrical accessories or lamps. When you dispose of such products, please follow the guidance of your local authority and/or ask the shop where you purchased the product.
After collecting the used products, they are reused and recycled in a proper way. This effort will help us reduce the wastes as well as the negative impact to the human health and the environment at the minimum level.
The mark on the electrical and electronic products only applies to the current European Union Member States.

⚠ **WARNING** ⚠

Installation and transport

Consult your dealer for installing and transporting the projector. DO NOT install or transport the projector by non-professional person. Doing so may cause the lamp to break or may cause personal injury.

- Power Supply
  - Consult your dealer for installing the power cable to the projector. DO NOT install the power cable by yourself. Doing so may cause a fire or electric shock.
  - The projector is so designed that it operates with the power supply voltage described below.
    For C1 connection
    (When the AC power to the projector power supply and the lamp power supply is provided by a single cable)
    - AC 200V-240V single phase 50/60Hz

    For C2 connection
    (When the AC power to the projector power supply and the lamp power supply is provided by separate cables)
    - AC 100V-240V single phase 50/60Hz (projector power supply)
    - AC 200V-240V single phase 50/60Hz (lamp power supply)

    Ensure that your power supply fits this requirement before attempting to use your projector.
  - Handle the power cable carefully. A damaged or frayed power cable can cause electric shock or fire.
    - Do not bend or tug the power cable excessively.
    - Do not place the power cable under the projector, or any heavy object.
    - Do not cover the power cable with other soft materials such as rugs.
    - Do not heat the power cable.
- Turn off the projector, shut down AC power by using a circuit breaker and contact qualified service personnel under the following conditions. For C2 connection, turn off the projector, shut down the AC power to the projector and the lamp using a circuit breaker, and contact your dealer/distributor for a repair.

- When the power cable is damaged or frayed.
- If liquid has been spilled into the projector, or if it has been exposed to rain or water.
- If the projector does not operate normally when you follow the instructions described in this user's manual.
- If the projector has been dropped or the cabinet has been damaged.
- If the projector exhibits a distinct change in performance, indicating a need for service.

• Do not place the projector in the following conditions:
  - near water, baths or damp rooms.
  - on an unstable cart, stand, or table.
  - in direct sunlight, near heaters or heat radiating appliances.
  - in a dusty, smoky or steamy environment.
  - on a sheet of paper or cloth, rugs or carpets.
• Do not place any liquids on top of your projector. Refer servicing to qualified service personnel if liquid has been spilled.
• Prevent foreign objects such as paper clips and bits of paper from falling into your projector. Do not attempt to retrieve any objects that might fall into your projector. Do not insert any metal objects such as a wire or screwdriver into your projector. If something should fall into your projector, disconnect it immediately and have the object removed by a qualified service personnel.
  For C2 connection, turn off the projector, shut down the AC power to the projector and the lamp using a circuit breaker, and contact your dealer/distributor.
• Do not cover the lens with the supplied lens cap or equivalent while the projector is on. Doing so can lead to distorting or melting of the cap and burning your hands due to the heat emitted from the light output.

⚠ CAUTION ⚠

• High Pressure Lamp May Explode if Improperly Handled. Only service personnel should open the lamp door. Refer Servicing to Qualified Service Personnel.
• Do not look into the lens while the projector is on. Serious damage to your eyes could result.
• Do not touch the projector during a thunder storm. Doing so can cause electrical shock or fire.
• Ensure that there is sufficient ventilation and that vents are unobstructed to prevent potentially dangerous concentrations of ozone and the build-up of heat inside your projector.
  Allow at least 8 inches (20 cm) of space between your projector and a wall. Allow at least 20 inches (50 cm) of space between the ventilation outlet of the projector and an object.
  Connect the projector exhaust outlet with the exhaust equipment having a capacity of 13 m^3/min or more.
• Do not handle the projector and the power cable with wet hands. Doing so can cause electrical shock or fire.
• Shut down AC power to the projector and disconnect all the cables before moving the projector to another place.
  For C2 connection, turn off the projector, shut down the AC power to the projector and the lamp using a circuit breaker. Disconnect the cables between devices and the lamp before moving the projector.
• Consult your dealer for installing the power cable to the projector. DO NOT install the power cable by yourself. Doing so may cause a fire or electric shock.
• To carry the projector, a minimum of five persons are required.
• Do not hold the lens part and the anamorphic lens part (or the wide converter lens part) with your hand. Otherwise the projector may tumble or drop, causing personal injury.
• If the projector will not be used for an extended period of time, shut down AC power.
  For C2 connection, turn off the projector, shut down the AC power to the projector and the lamp using a circuit breaker.
• Shut down AC power by using a circuit breaker before cleaning.
  For C2 connection, turn off the projector, shut down the AC power to the projector and the lamp using a circuit breaker.
• Do not try to touch the ventilation outlet as it can become heated while the projector is turned on.
  Doing so can lead to burning your hands due to the emitted heat.
• When main body is damaged, cooling fluids may come out of internal part. DO NOT touch and drink the cooling fluid. When the cooling fluids are swallowed or contacted with your eyes, please consult with doctors immediately.
• When using a LAN cable:
  For safety, do not connect to the connector for peripheral device wiring that might have excessive Voltage.

Installation

• Do not put the projector on its side when the lamp is on. Doing so may cause damage to the projector.
• Handle your projector carefully. Dropping or jarring your projector could damage internal components.
• Controlled ambient light environments will allow for an image of higher contrast and depth to be displayed.
• Screens with a soiled, scratched, or discolored area will not produce a clean image. Care should be used in the handling of the screen.
• To carry the projector, a minimum of five persons are required. Remove the lens and the lamp before carrying the projector. Do not apply a strong shock to the projector.
• Keep finger prints or dust off the lens surface. Leaving finger prints or dust can cause unwanted shadows on the screen.
  Cover the lens with the supplied lens cap if the projector is not to be used for an extended period of time.

Lamp Caution: Please read before operation

• Due to the lamp being sealed in a pressurized environment, there is a small risk of explosion, if not operated correctly.
  There is minimal risk involved, if the unit is in proper working order, but if damaged or operated beyond the recommended hours, the risk of explosion increases. Please note that there is a warning system built in, that displays following message when you reach a preset operating time "Bulb Over Time". When you see this message please contact your dealer for a replacement.
  If the lamp does explode, smoke will be discharged from the vents located on the back of the unit. Do not stand in front of the vents during the operation. This smoke is comprised of glass in particulate form and Xenon gas, and will not cause harm if kept out of your eyes. If your eyes have been exposed to this gas, please flush your eyes out with water immediately and seek immediate medical attention. Do not rub your eyes! This could cause serious injury.

- Consult qualified service personnel for cleaning the inside of the projector or lamp replacement. Do not try to clean the inside of the projector or replace the lamp by yourself.
- Do not shut down AC power to the projector under the following conditions. Doing so can damage the projector.
  - While projecting images.
  - While cooling after the projector has been turned off. (The POWER button LED blinks in white while the fan is rotating, and “Cooling...” is displayed on the LCD screen. The cooling fan continues to work for 5 minutes.)

For questions relating to unclear points or repairs

Contact your dealer or the following support branch for questions relating to unclear points, malfunctions and repairs of the product.

In Europe

NEC Europe, Ltd. / European Technical Centre
Address: Unit G, Stafford Park 12, Telford TF3 3BJ, U.K.
Telephone: +44 1952 237000
Fax Line: +44 1952 237006

1. What's in the Box?

Check the content of the accessories.

☐NC2000C projector

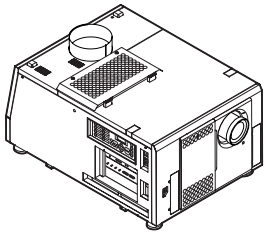

☐Attachment for lamp x 1

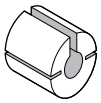

☐Exhaust outlet protective sheet x 1

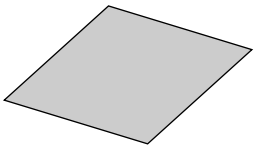

☐Exhaust outlet protective sheet fastening band x 4

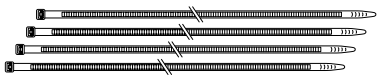

☐Small iris x 1

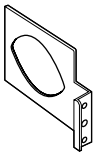

☐Cover key x 2

☐Lamp door key x 2

☐Important Information x1

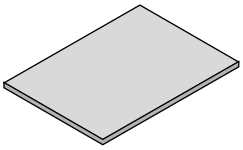

☐CD-ROM (User's Manual)

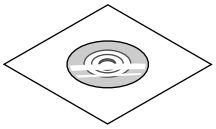

TIP

* In the event that you did not receive all of the accessories outlined above, or some are damaged, contact your dealer/distributor.
Differs slightly from the drawings in this manual, but there is no problem in actual use.

2. Troubleshooting

Before asking for repair, please check your connection, settings and operation once again. If the trouble cannot be corrected, please contact your dealer/distributor for instructions or repair.

Problems and where to check

Problem	Check these items
The projector cannot be turned on.	Check to see if AC power is supplied to the projector.
	Make certain that the projector power switch is ON.
	Check to see whether the panel key lock function is activated. If so, the main unit's control buttons are locked and do not work.
	Is the temperature inside the projector too high? When the inside temperature is too high, the protective function does not allow your projector to be turned on. Wait some time and then turn it on.
The image cannot be projected.	Check to see if the connected input has been selected.
	Check to see if a cable is properly connected to the input terminal.
	Check to see whether the douser is closed.
	Check to see if the settings are all adjusted properly.
The image is distorted.	Check to see if the protractor is properly set up.
The image is blurred.	Make certain that the lens is properly focused.
	Check to see if the screen and a projector are installed at correct angles.
	The projection distance may be larger than the focusing range.
	See if the lens and other parts have condensation on them. If the projector is turned on in a warm place after storage in a cold place, the lens and other optical components inside may develop condensation. In such a case, please wait several minutes until the condensation disappears.
Video image is disturbed	Check whether the signal cable connected to the projector is disconnected.
The STATUS indicator blinks in red.	Your projector may have trouble. Please contact your dealer/distributor for instructions.
An error code is displayed.	Please contact your dealer/distributor for instructions.

3. Indicator display list

See the descriptions below when any of four buttons on the control panel or the Rear STATUS indicator on the rear of the projector is lit or blinking. The projector also has a warning function that uses a buzzer.

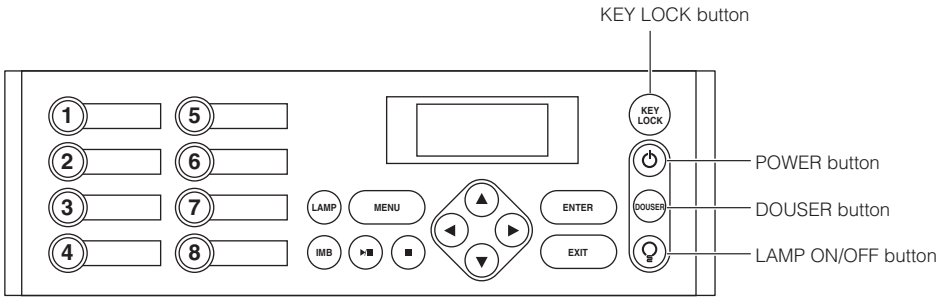

KEY LOCK button

Indicator condition		Projector condition	Note
Steady light	White	The key lock is off.	-
	Orange	The key lock is on.	-

POWER button

Indicator condition		Projector condition	Note
Off		The project power supply is off.	-
Blinking light	Green	The projector is starting up.	Wait for a moment.
	White	The projector is cooling down.	Wait for a moment.
Steady light	Green	The projector is turned on.	-
	White	The projector is in standby.	-

DOUSER button

Indicator condition		Projector condition	Note
Blinking light	White	The douser is closed.	-
Steady light	Green	The douser is opened.	-

LAMP ON/OFF button

Indicator condition		Projector condition	Note
Blinking light	White	The lamp is off.	-
Steady light	Green	The lamp is on.	-

Rear STATUS indicator

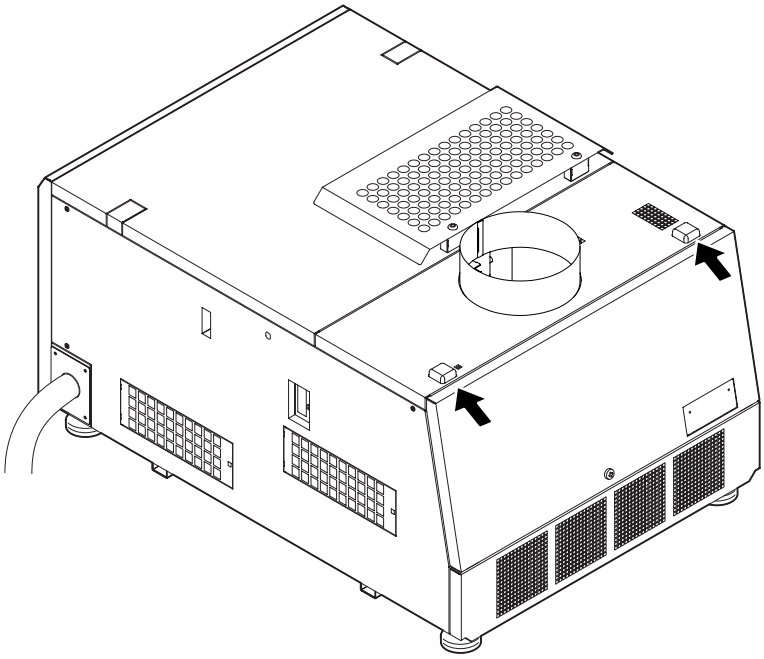

Indicator condition		Projector condition	Note
Off		Main power is off.	-
Blinking light	Green	The projector is getting ready to turn on. The douser is closed. The lamp is off.	Wait for a moment.
	Orange	The projector is cooling down.	Wait for a moment.
	Red (With buzzer)	Safety problem, error	An error message is displayed in the LCD screen. Check the content of the error.
	Red (Without buzzer)	Error with possible image project under certain conditions.	
Steady light	Green	The projector is turned on.	-
	Orange	The projector is in standby.	-
	Red	Error at a level with not affect on projection.	An error message is displayed in the LCD screen. Check the content of the error.

4. Specifications

Model No.	NC2000C	
Projection method	3 chip DLP Cinema® method (0.98-inch DC2K chip)	
Panel resolution	2048 x 1080	
Lamp type	4.0 kW xenon lamp (Note 1)	
Screen sizes	5 m to 20 m (Width) (Depends on setup conditions)	
Contrast ratio	2200:1 or above	
Lens adjustment function	Motorized lens shift (vertical/horizontal), motorized zoom, motorized focus, douser	
Signal input ports (Note 2)	Slot B	Signal input board (NC-80LB01) mounted as standard SDI (4) BNC (SMPTE 292M, 372M) RGB DIGITAL (2) DVI-D 24pin (TMDS specification)
	Slot A	When shipped from factory: Empty (for mounting optional components)
External Control	RS-232C D-sub 9 pin x 1 GPIO port D-sub 37 pin x 1 Remote control input port stereo mini jack x 1 3D CTL D-sub 15 pin x 1 USB Type A x 1 Interlock port x 1 Ethernet port G-bit RJ-45 x 1 Anamorphic Lens Turret control port x 1	
Power supply	For C1 connection (Note 3)	Single phase AC 200V-240V 50/60Hz 30A (projector power supply + lamp power supply)
	For C2 connection (Note 3)	Single phase AC 100V-240V 50/60Hz 5–2.5A (projector power supply) Single phase AC 200V-240V 50/60Hz 27A (lamp power supply)
Power consumption	5500W	
Cooling method	Cooling fluid system, Cooling air system (includes dust filter)	
Noise level	Less than 62 dB	
Installation	Orientation:Desktop/front, Desktop/rear	
Net weight	99 kg (Excluding lens)	
Dimensions	700 mm (W) x 990 mm (D) x 503 mm (H) (Does not include protruding portions Includes foot)	
Environment	Operating temperature: 10 to 35˚C Operating humidity: 10 to 85% (non-condensing) Storage temperature: -10 to 50˚C Storage humidity: 10 to 85%	
Regulations		<Safety> <EMC>
	USA	UL60950-1 FCC Class A
	Canada	CSA60950-1 ICES-003 Class A
	Europe	EN60950-1 EN55022 Class A EN55024
	Oceania	IEC60950-1 AS/NZS CISPR.22 Class A
	Japan	J60950 VCCI Class A
	Asia	IEC60950-1 CISPR. 22

(Note 1) Using any lamp other than NEC's optional lamps will result in lower brightness compared to NEC optional lamps. If brightness is important to you, it is recommended that you use NEC's optional lamps.
NEC will post information on its homepage regarding installable lamps, other than NEC's optional lamps. Note that NEC does not guarantee performance and reliability when lamps other than NEC's optional lamps are installed.

(Note 2) In addition to the input ports described above that are mounted when the device is shipped, Image Media Block and Multi Media Switcher are available as separate optional products. A wider variety of input interfaces can be supported by mounting these in slot A.

(Note 3) C1 connection is the case when the AC power to the projector power supply and the lamp power supply is provided by a single cable.
C2 connection is the case when the AC power to the projector power supply and the lamp power supply is provided by separate cables.

* Note that these specifications and design can change without prior notice.

DLP Cinema® Projektor

NC2000C

Wichtige Informationen

English

Deutsch

Français

中文

日本語

Wissenswertes über die Verwendung der im Lieferumfang enthaltenen Benutzerdokumente

Im Lieferumfang des Projektor sind zwei Benutzerdokumente enthalten.

Wichtige Informationen

- Lesen Sie bitte zuerst die wichtigen Informationen. Diese enthaltenen Hinweise über die Projektorsicherheit, über Vorsichtsmaßnahmen und über die Fehlersuche.

Bedienungshandbuch auf CD-ROM

- Das vollständige Bedienungshandbuch befindet sich in Form einer PDF-Datei (Portable Document Format) auf CD-ROM und liefert Ihnen detaillierte Produkt- und Verwendungsinformationen für Ihren NEC-Projektor.
  Das Handbuch ist in fünf Sprachen verfügbar (Englisch, Deutsch, Französisch, vereinfachtes Chinesisch und Japanisch).
  Zur Ansicht und zum Ausdrucken der PDF-Dateien benötigen Sie Adobe Acrobat Reader™ oder Adobe Reader™.

HINWEIS: Adobe Reader kann von der Adobe-Website heruntergeladen werden.
Besuchen Sie dazu http://www.adobe.com und laden Sie sich die aktuelle Version für Ihr Betriebssystem herunter.

- Zur Ansicht des Bedienungshandbuchs (PDF)

  [Windows]

  1. Legen Sie die im Lieferumfang enthaltene CD-ROM in das CD-ROM-Laufwerk Ihres Computers ein.
  2. Doppelklicken Sie auf das [Arbeitsplatz]-Symbol auf dem Windows-Desktop.
  3. Doppelklicken Sie auf das [NECPJ-UM]-CD-ROM-Symbol.
  4. Doppelklicken Sie auf [start_menu.pdf].
     - Adobe Acrobat Reader oder Adobe Reader wird gestartet und ermöglicht Ihnen die Ansicht des Startmenüs.
  5. Klicken Sie auf [Bedienungshandbuch].
     Des Bedienungshandbuchs wird angezeigt.

  [Macintosh]

  1. Legen Sie die im Lieferumfang enthaltene CD-ROM in das CD-ROM-Laufwerk Ihres Macintoshs ein.
  2. Doppelklicken Sie auf das [NECPJ-UM]-CD-ROM-Symbol auf Ihrem Macintosh-Desktop.
  3. Doppelklicken Sie auf [start_menu.pdf].
     - Adobe Acrobat Reader oder Adobe Reader wird gestartet und ermöglicht Ihnen die Ansicht des Startmenüs.
  4. Klicken Sie auf [Bedienungshandbuch].
     Des Bedienungshandbuch wird angezeigt.

- Zum Kopieren des Bedienungshandbuchs (PDF) auf Ihren Computer:

  Die Bedienungshandbücher auf der im Liferumfang enthaltenen CD-ROM können auf die Festplatte Ihres Computers kopiert werden.
  Wählen Sie auf der im Lieferumfang enthaltenen CD-ROM [manual] → [German] → [NC2000C_manual_G.pdf] aus und kopieren Sie die Datei auf die Festplatte Ihres Computers.

Für Einzelheiten lesen Sie bitte das Benutzerhandbuch (PDF-Format), das sich auf der im Lieferumfang enthaltenen CD-ROM befindet.

Wichtige Informationen

Vorsichtsmaßnahmen:

Lesen Sie sich dieses Handbuch bitte sorgfaltig durch, bevor Sie den NC2000C benutzen, und bewahren Sie das Bedienungshandbuch in greifbarer Nahe als spatere Referenz auf.

Wichtige Sicherheitshinweise

Diese Sicherheitshinweise sollen eine lange Lebensdauer Ihres Projektors sicherstellen und vor Feuer und elektrischen Schlägen schützen. Lesen Sie diese Hinweise sorgfältig durch und beachten Sie alle Warnungen.

WARNUNG

ZUR VERMEIDUNG VON FEUER UND ELEKTRISCHEN SCHLÄGEN DARF DAS GERÄT WEDER REGEN NOCH FEUCHTIGKEIT AUSGESETZT WERDEN.

ACHTUNG

ZUR VERMEIDUNG EINES ELEKTRISCHEN SCHLAGES ÖFFNEN SIE NICHT DAS GEHÄUSE. INNERHALB DES GEHÄUSES BEFINDEN SICH KEINE FÜR DIE BEDIENUNG DES GERÄTES ERFORDERLICHEN TEILE. LASSEN SIE DEN KUNDENDIENST NUR VON HIERFÜR QUALIFIZIERTEN PERSONEN DURCHFÜHREN.

Dieses symbol warnt den bediener, dass innerhalb des gerätes unisolierte teile vorhanden sind, die hochspannung führen und deren berührung einen elektrischen schlag verursachen kann.

Dieses symbol macht den bëdiener darauf aufmerksam, dass wichtige, den betrieb und die wartung des gerätes betreffende schriften beigefügt sind. um irgendwelche probleme zu vermeiden, sollten diese beschreibungen sorgfältig gelesen werden.

Maschinenlärminformations-Verordnung – 3. GPSGV,

Der höchste Schalldruckpegel beträgt 70 dB (A) oder weniger gemäß EN ISO 7779.

Entsorgung Ihres benutzten Gerätes

Die EU-weite Gesetzgebung, wie sie in jedem einzelnen Mitgliedstaat gilt, bestimmt, dass benutzte elektrische und elektronische Geräte mit dieser Markierung (links) getrennt vom normalen Haushaltsabfall entsorgt werden müssen.
Dies schließt Projektoren und deren elektrisches Zubehör oder ihre Lampen mit ein. Folgen Sie beim Entsorgen eines solchen Gerätes bitte den Anweisungen Ihrer örtliche Behörde und/oder konsultieren Sie den Händler, bei dem Sie das Gerät erworben haben.
Nach der Sammlung benutzter Geräte werden diese erneut verwendet und entsprechend den Umweltbestimmungen recycelt. Das trägt dazu bei, die Abfallmenge zu reduzieren sowie die negativen Auswirkungen auf die menschliche Gesundheit und die Umwelt möglichst gering zu halten.
Die Markierung auf elektrischen und elektronischen Geräten gilt nur für die gegenwärtigen Mitgliedsstaaten der Europäischen Union.

WARNUNG

Installation und Transport

Konsultieren Sie Ihren Händler für das Installieren und Transportieren des Projektors. Lassen Sie den Projektor NICHT von unausgebildetem Personal transportieren oder installieren. Dies kann zur Beschädigung der Lampe oder zu Verletzungen führen.

- Spannungsversorgung
  - Zum Installieren des Netzkabels am Projektor wenden Sie sich bitte an Ihren Fachhändler. UNTER KEINEN UMSTÄNDEN versuchen, das Netzkabel selbst zu installieren. Brand- und Schlaggefahr.
  - Der Projektor wurde so konzipiert, dass er mit der unten aufgeführten Netzspannung läuft.
    Für Anschluss C1
    (Wenn die Netzspannung zur Spannungsversorgung des Projektors und der Lampe über ein einzelnes Kabel zugeführt wird)
    - AC 200 V-240 V einphasig 50/60 Hz

    Für Anschluss C2
    (Wenn die Netzspannung zur Spannungsversorgung des Projektors und der Lampe über getrennte Kabel zugeführt wird)
    - AC 100 V-240 V einphasig 50/60 Hz (Spannungsversorgung zum Projektor)
    - AC 200 V-240 V einphasig 50/60 Hz (Spannungsversorgung zur Lampe)

    Stellen Sie sicher, dass die vorhandene Spannungsversorgung diesen Vorgaben entspricht, bevor Sie versuchen, Ihren Projektor zu betreiben.
  - Gehen Sie mit dem Netzkabel vorsichtig um. Ein beschädigtes oder ausgefranstes Netzkabel kann einen elektrischen Schlag oder Feuer verursachen.
    - Biegen Sie das Netzkabel nicht übermäßig, und zerren Sie nicht an dem Kabel.
    - Verlegen Sie das Netzkabel nicht unterhalb des Projektors oder eines schweren Gegenstandes.

- Decken Sie das Netzkabel nicht mit anderen weichen Materialien wie z. B. Wolldecken ab.
- Erhitzen Sie das Netzkabel nicht

- Schalten Sie den Projektor aus, ziehen Sie den Netzstecker und kontaktieren Sie unter den folgenden Bedingungen qualifiziertes Service-Personal. Für Anschluss C2 schalten Sie den Projektor aus, trennen Sie die Netzspannung zur Spannungsversorgung des Projektors und der Lampe mithilfe eines Ausschalters und wenden Sie sich für Reparaturarbeiten an Ihren Händler/ Lieferanten.
  - Wenn das Netzkabel beschädigt oder ausgefranst ist.
  - Falls Flüssigkeit in den Projektor gelangt ist, oder wenn er Regen oder Wasser ausgesetzt war.
  - Falls der Projektor nicht normal arbeitet, obwohl Sie die in diesem Bedienungshandbuch beschriebenen Anleitungen befolgen.
  - Wenn der Projektor fallengelassen oder das Gehäuse beschädigt wurde.
  - Wenn der Projektor eine eindeutige Leistungsveränderung aufweist, die einer Wartung bedarf.
- Den Projektor unter folgenden Bedingungen nicht aufstellen:
  - auf einem instabilen Handwagen, Gestell oder Tisch.
  - in der Nähe von Wasser, in Badezimmern oder feuchten Räumen.
  - in direkter Sonneneinstrahlung, neben Heizungen oder Wärme ausstrahlenden Geräten.
  - in einer staubigen, rauchigen oder dampfhaltigen Umgebung.
  - auf einem Blatt Papier oder auf Kleidung, Wolldecken oder Teppichen.
- Stellen Sie keine mit Flüssigkeit gefüllten Gefäße auf Ihren Projektor. Überlassen Sie die Reparatur ausschließlich qualifiziertem Servicepersonal, wenn Flüssigkeit verschüttet worden ist.
- Vermeiden Sie, dass Fremdgegenstande wie Büroklammern und Papierschnipsel in den Projektor fallen. Versuchen Sie nicht, in den Projektor gefallene Gegenstände selbst zu entfernen. Stecken Sie keine Metallgegenstände wie einen Draht oder Schraubendreher in Ihren Projektor. Wenn etwas in den Projektor gefallen ist, müssen Sie sofort den Netzstecker ziehen und den Gegenstand von qualifiziertem Servicepersonal entfernen lassen.
  Für Anschluss C2 schalten Sie den Projektor aus, trennen Sie die Netzspannung zur Spannungsversorgung des Projektors und der Lampe mithilfe eines Ausschalters und wenden Sie sich an Ihren Händler/Lieferanten.
- Bedecken Sie die Linse nicht mit der mitgelieferten Linsenkape o.ä. wärend der Projektor eingeschaltet ist. Dies kann eine Verformung oder ein Schmelzen der Kappe verursachen. Darüber hinaus würden Sie sich aufgrund der vom Lichtausgang abgestrahlten Hitze wahrscheinlich die Hände verbrennen.

ACHTUNG

- Bei unsachgemäßer Handhabung kann die Hochdrucklampe explodieren. Nur Service-Personal sollte die Lampentür öffnen. Überlassen Sie die Reparatur ausschließlich qualifiziertem Servicepersonal.
- Schauen Sie nicht in die Linse, wenn der Projektor eingeschaltet ist. Dies könnte schwere Augenverletzungen zur Folge haben.
- Berühren Sie den Projektor auf keinen Fall während eines Gewitters. Wenn Sie dies nicht beachten, kann dies zu einem elektrischen Schlag oder einem Feuer führen.
- Sorgen Sie für ausreichende Belüuftung und stellen Sie außerdem sicher, dass die Lüftungsschlitze frei bleiben, damit sich innerhalb des Projektors kein Hitzestau bilden kann.
  Lassen Sie mindestens 20 cm Abstand zwischen Ihrem Projektor und der Wand. Lassen Sie mindestens 50 cm Abstand zwischen der Belüftung des Projektors und anderen Gegenständen.
  Schließen Sie den Entlüftungsanschluss des Projektors an die Entlüftungsanlage an, die eine Kapazität von 13m^3/ min oder mehr hat.
- Fassen Sie den Projektor und das Netzkabel nicht mit nassen Händen an. Wenn Sie dies nicht beachten, kann dies zu einem elektrischen Schlag oder einem Feuer führen.
- Schalten Sie die Stromversorgung des Projektors aus und trennen Sie sämtliche Kabel ab, bevor Sie den Projektor an einen anderen Ort stellen.
  Für Anschluss C2 schalten Sie den Projektor aus, und trennen Sie die Netzspannung zur Spannungsversorgung des Projektors und der Lampe mithilfe eines Ausschalters. Trennen Sie die Kabel zwischen Geräten und der Lampe, bevor Sie den Projektor bewegen.
- Zum Installieren des Netzkabels am Projektor wenden Sie sich bitte an Ihren Fachhändler. UNTER KEINEN UMSTÄNDEN versuchen, das Netzkabel selbst zu installieren. Brand- und Schlaggefahr.
- Zum Tragen des Projektors werden mindestens fünf Personen benötigt.
- Den Projektor nicht am Linsenbereich oder an der anamorphotischen Linsenwelle (oder an der Weitwinkelkonverterlinse) tragen.
  Anderenfalls kann der Projektor umkippen oder herunterfallen und Verletzungen verursachen.
- Wenn der Projektor über eine längere Zeit nicht genutzt wird, schalten Sie die Stromversorgung ab.
  Für Anschluss C2 schalten Sie den Projektor aus, und trennen Sie die Netzspannung zur Spannungsversorgung des Projektors und der Lampe mithilfe eines Ausschalters.
- Schalten Sie vor der Reinigung die Stromversorgung durch Herausdrehen der Sicherung ab.
  Für Anschluss C2 schalten Sie den Projektor aus und trennen Sie die Netzspannung zur Spannungsversorgung des Projektors und der Lampe mithilfe eines Ausschalters.
- Versuchen Sie nicht den Lüftungsauslass da dieser bei eingeschaltetem sehr heiß werden kann. Dies kann aufgrund der abgestrahlten Wärme zu Verbrennungen der Hände führen.
- Wenn das Hauptteil beschädigt ist, kann Kühlungsflüssigkeit aus dem Inneren austreten. Berühren Sie die Flüssigkeit NICHT, und trinken Sie sie NICHT.
  Wenn die Kühlungsflüssigkeit geschluckt wurde oder in Augenkontakt kam, rufen Sie bitte sofort einen Arzt
- Wenn ein LAN-Kabel verwendet wird:
  Schließen Sie es aus Sicherheitsgründen nicht an den Anschluss der Peripheriegeräte-Verbindung an, das sie eine zu hohe Spannung führen könnte.

Installation

- Den Projektor bei eingeschalteter Lampe nicht auf die Seite legen. Dies könnte den Projektor beschädigen.
- Behandeln Sie Ihren Projektor vorsichtig. Fallenlassen oder starkes Schutteln kann interne Komponenten beschädigen.
- Kontrollierte Lichtumgebungen ermöglichen bei anzuzeigenden Bildern höheren Kontrast und Tiefe.
- Bildschirme mit verschmutzten, verkratzten oder verfärbten Stellen ergeben kein sauberes Bild. Vorsicht bei der Handhabung des Bildschirms.
- Zum Tragen des Projektors werden mindestens fünf Personen benötigt. Entfernen Sie vor dem Tragen des Projektors sowohl die Linse als auch die Lampe. Setzen Sie den Projektor keinen starken Erschütterungen aus.
- Schützen Sie die Linse vor Fingerabdrücken und Staub. Fingerabdrücke oder Staub können unerwünschte Schatten auf der Leinwand verursachen.
  Bedecken Sie die Linse mit dem mitgelieferten Linsenverschluss, wenn der Projektor für einen längeren Zeitraum nicht benutzt wird.

Vorsichtsmaßnahmen bezüglich der Lampe: Bitte vor dem Betrieb durchlesen

- Aufgrund der unter Druck luftdicht verschlossenen Lampe besteht bei falscher Handhabung eine geringe Explosionsgefahr.
  Wenn sich das Gerät in einwandfreiem Zustand befindet, ist dieses Risiko minimal; die Explosionsgefahr erhöht sich jedoch im Falle einer Beschädigung oder bei einer Benutzung über die empfohlenen Betriebsstunden hinaus. Beachten Sie bitte, dass im Gerät ein Warnsystem integriert ist, das bei Erreichen der voreingestellten Betriebsdauer die nachfolgende Meldung anzeigt: “Bulb Over Time”.
  Im Falle einer Lampenexplosion tritt aus den Lüftungsschlitzen der Rückseite des Gerätes Rauch aus. Stehen Sie nicht vor den Entlüftungsöffnungen während des Betriebes. Dieser Rauch besteht aus einer ganz besonderen Form von Glas und aus Xenon-Gas. Solange dieser Rauch nicht in die Augen gelangt, bestehen keinerlei gesundheitliche Risiken. Wenn Ihre Augen dem Gas ausgesetzt worden sind, spülen Sie die Augen bitte sofort mit Wasser aus und konsultieren Sie einen Arzt. Reiben Sie die Augen nicht! Dies könnte ernsthafte Verletzungen zur Folge haben.
- Konsultieren Sie qualifiziertes Service-Personal für die Reinigung des Projektorinneren und für den Austausch der Lampe. Versuchen Sie nicht, das Innere des Projektors selbst zu reinigen oder die Lampe selbst auszutauschen.
- Schalten Sie unter den folgenden Bedingungen die Stromversorgung des Projektors nicht ab. Anderenfalls kann der Projektor beschädigt werden.
  - Während der Projizierung von Bildern
  - Während des Abkühlens, nach dem Projektor ausgeschaltet worden ist. (Die POWER-Anzeige blinkt weiß, während das Gebläse in Betrieb ist, und auf der LCD-Anzeige wird “cooling...” angezeigt. Das abkühlende fan fährt fort, für 5 Minuten zu arbeiten.)

Bei Fragen, die sich aus unklaren Punkten oder Reparaturarbeiten ergeben

Bei Fragen, die sich aus unklaren Punkten, Fehlfunktionen oder Reparaturarbeiten am Produkt ergeben, wenden Sie sich an Ihren Händler oder an die folgende Niederlassung.

In Europa

NEC Europe, Ltd. / European Technical Centre
Addresse: Unit G, Stafford Park 12, Telford TF3 3BJ, U.K.
Telefon: +44 1952 237000
Fax-Nummer: +44 1952 237006

1. Lieferumfang

Überprüfen Sie den Inhalt des Zubehörs.

☐NC2000C Projektor

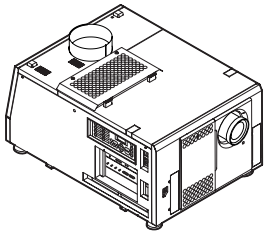

☐Aufsatz für die Lampe

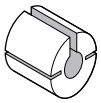

☐Auslass-Schutzfolie x 1

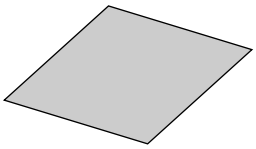

☐Befestigungsband für Auslass-Schutzfolie x 4

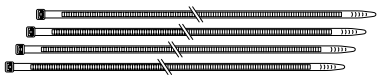

☐Kleine Iris x 1

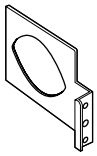

☐Schlüssel für Abdeckung x 2

☐Schlüssel für Lampentür x 2

☐Wichtige Informationen x 1

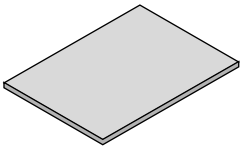

☐CD-ROM(Bedienungshandbuch)

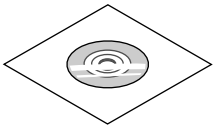

TIPP

* Falls Sie nicht alle der oben dargestellten Zubehörteile erhalten haben, oder falls einige davon beschädigt sind, kontaktieren Sie Ihren Händler/Lieferanten.
Weicht etwas von den Zeichnungen in dieser Anleitung ab, was aber kein Problem im Betrieb bedeutet.

2. Fehlersuche

Überprüfen Sie den Anschluss, die Einstellungen und den Betrieb noch einmal, bevor Sie den Projektor reparieren lassen. Wenn die Störung nicht behoben werden kann, wenden Sie sich für Anweisungen oder Reparaturarbeiten an Ihren Händler/Lieferanten.

Störungen und Überprüfung

Störung	Überprüfen Sie diese Punkte
Der Projektor kann nicht eingeschaltet werden.	Überprüfen Sie, ob der Netzstecker ordnungsgemäß an die Steckdose angeschlossen ist und der Projektor mit Strom versorgt wird.
	Stellen Sie sicher, dass der Projektor-Ein/Aus-Schalter auf EIN gestellt ist.
	Überprüfen Sie, ob die Tastensperrfunktion aktiviert ist. Wenn dies der Fall ist, sind die Funktionstasten der Haupteinheit gesperrt und funktionieren nicht.
	Ist die Temperatur im Innern des Projektors zu hoch? Wenn die Innentemperatur zu hoch ist, verhindert die Schutzfunktion die Einschaltung Ihres Projektors. Warten Sie eine Weile und schalten Sie ihn danach ein.
Das Bild kann nicht projiziert werden.	Überprüfen Sie, ob der angeschlossene Eingang ausgewählt worden ist.
	Überprüfen Sie, ob das Kabel korrekt am Eingangsanschluss angeschlossen ist.
	Überprüfen Sie, ob der Douser geschlossen ist.
	Überprüfen Sie, ob alle Einstellungen korrekt eingestellt worden sind.
Das Bild ist verzerrt.	Überprüfen Sie, ob der Winkelmesser korrekt eingestellt ist.
Das Bild ist unscharf.	Stellen Sie sicher, dass die Linse korrekt fokussiert ist.
	Überprüfen Sie, ob der Bildschirm und der Projektor im korrekten Winkel zueinander aufgestellt sind.
	Die Projektionsentfernung ist möglicherweise größer als der Fokusbereich.
	Überprüfen Sie, ob sich auf der Linse oder auf anderen Teilen Kondensation gebildet hat. Wenn der Projektor an einem warmen Ort eingeschaltet wird, aber zuvor an einem kalten Ort aufbewahrt wurde, kann sich auf der Linse und auf anderen optischen Komponenten im Innern Kondensation bilden. Warten Sie in solch einem Fall einige Minuten, bis die Kondensation verschwunden ist.
Das Videobild ist gestört	Überprüfen Sie, ob das am Projektor angeschlossene Signalkabel abgetrennt worden ist.
Die STATUS-Anzeige blinkt rot.	An Ihrem Projektor ist möglicherweise eine Störung aufgetreten. Bitte kontaktieren Sie für Anweisungen Ihren Händler/Lieferanten.
Ein Fehlercode wird angezeigt.	Bitte kontaktieren Sie für Anweisungen Ihren Händler/Lieferanten.

3. Anzeige-Displayliste

Lesen Sie die unten stehenden Beschreibungen, wenn eine der vier Tasten auf dem Bedienfeld oder die rückwärtige STATUS-Anzeige an der Rückseite des Projektors leuchtet oder blinkt. Der Projektor verfügt ferner über eine Warnfunktion, die einen Summer einsetzt.

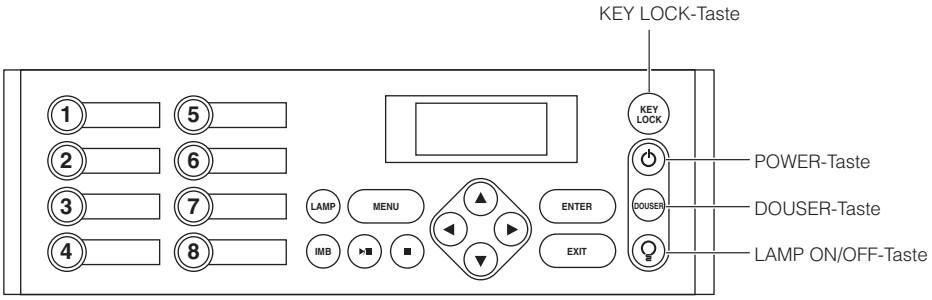

KEY LOCK-Taste

Anzeige-Zustand		Projektor-Zustand	Hinweis
Stetiges Leuchten	Weiß	Die Tastensperre ist ausgeschaltet.	-
	Orange	Die Tastensperre ist eingeschaltet.	-

POWER-Taste

Anzeige-Zustand		Projektor-Zustand	Hinweis
Aus		Die Spannungsversorgung des Projektors ist ausgeschaltet.	-
Blinkendes Licht	Grün	Der Projektor wird hochgefahren.	Warten Sie einen Moment.
	Weiß	Der Projektor kühlt sich ab.	Warten Sie einen Moment.
Stetiges Leuchten	Grün	Der Projektor ist eingeschaltet.	-
	Weiß	Der Projektor befindet sich im Standby-Modus.	-

DOUSER-Taste

Anzeige-Zustand		Projektor-Zustand	Hinweis
Blinkendes Licht	Weiß	Der Douser ist geschlossen.	-
Stetiges Leuchten	Grün	Der Douser ist offen.	-

LAMP ON/OFF-Taste

Anzeige-Zustand		Projektor-Zustand	Hinweis
Blinkendes Licht	Weiß	Die Lampe ist ausgeschaltet.	-
Stetiges Leuchten	Grün	Die Lampe ist eingeschaltet.	-

Rückwärtige STATUS-Anzeige

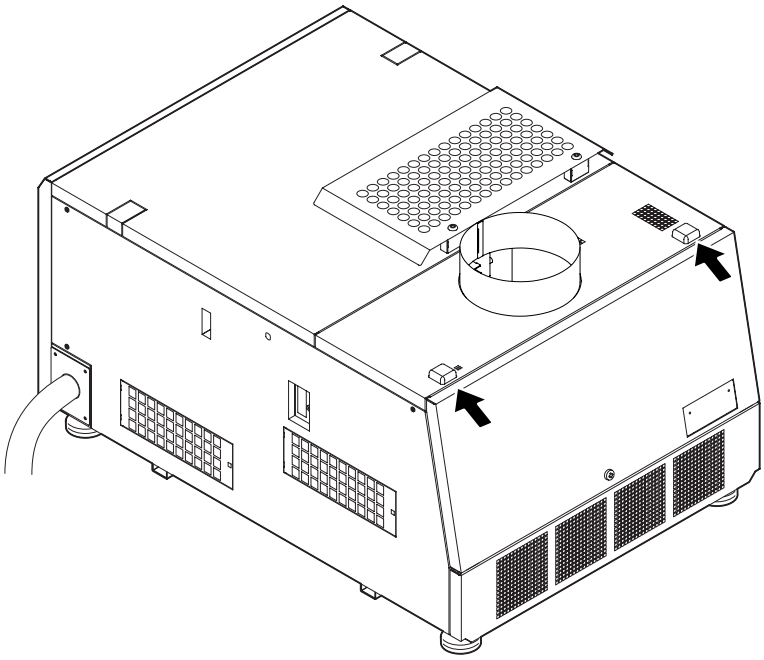

Anzeige-Zustand		Projektor-Zustand	Hinweis
Aus		Die Hauptstromversorgung ist ausgeschaltet.	-
Blinkendes Licht	Grün	Der Projektor macht sich für die Einschaltung bereit. Der Douser ist geschlossen. Die Lampe ist ausgeschaltet.	Warten Sie einen Moment.
	Orange	Der Projektor kühlt sich ab. Warten Sie einen Moment.	Warten Sie einen Moment.
	Rot (mit Summer)	Sicherheitsproblem, Fehler	Eine Fehlermeldung wird auf dem LCD-Bildschirm angezeigt. Überprüfen Sie den Fehlerinhalt.
	Rot (ohne Summer)	Fehler mit möglicher Bildprojektion unter bestimmten Bedingungen.	
Stetiges Leuchten	Grün	Der Projektor ist eingeschaltet.	-
	Orange	Der Projektor befindet sich im Standby-Modus.	-
	Rot	Fehler, der sich nicht auf die Projektion auswirkt.	Eine Fehlermeldung wird auf dem LCD-Bildschirm angezeigt. Überprüfen Sie den Fehlerinhalt.

4. Technische Daten

Modellnummer	NC2000C	
Projektionsverfahren	3 Chip DLP Cinema®-Methode (0,98-Zoll-DC2K-Chip)	
Bildflächenauflösung	2048 x 1080	
Lampentyp	4.0kW Xenon-Lampe (Hinweis 1)	
Bildschirmgrößen	5m bis 20m (Breite) (Ist abhängig von den Einrichtungsbedingungen)	
Kontrastverhältnis	Mehr als 2200 : 1	
Linsenbewegung	Servo in Horizontal- und Vertikalrichtung, Motorzoom und -fokus, Douser	
Signaleingangsanschlüsse (Hinweis 2)	Steckplatz B	Signaleingangskarte (NC-80LB01) standardmäßig installiert SDI (4) BNC (SMPTE 292M, 372M) RGB DIGITAL (2) DVI-D 24-pol. (TMDS-Spezifikation)
	Steckplatz A	Im Lieferzustand ab Werk: Leer (zum Einbau optionaler Komponenten)
Externe Steuerung	RS-232C D-Sub 9-pol. x 1 GPIO-Port D-Sub 37-pol. x 1 Eingangsanschluss Fernbedienung Stereoklinkenstecker x 1 3D CTL D-Sub 15-pol. x 1 USB-Typ A x 1 Verriegelungsanschluss x 1 Ethernet-Port G-bit RJ-45 x 1 Anamorpher Linsenturm-Steueranschluss x 1	
Netzspannung	Für Anschluss C1 (Hinweis 3)	Einphasig AC 200 V-240 V 50/60 Hz 30 A (Spannungsversorgung Projektor + Spannungsversorgung Lampe)
	Für Anschluss C2 (Hinweis 3)	Einphasig AC 100 V-240 V 50/60 Hz 5–2,5 A (Spannungsversorgung Projektor) Einphasig AC 200 V-240 V 50/60 Hz 27 A (Spannungsversorgung Lampe)
Leistungsaufnahme	5500W	
Abkühlverfahren	Kühlflüssigkeitssystem, Luftabkühlsystem (einschließlich Staubfilter)	
Geräuschpegel	Weniger als 62dB	
Installation	Ausrichtung: Desktop/Vorn, Desktop/Hinten	
Gewicht	99 kg (ohne Linse)	
Abmessungen (B/T/H)	700mm(B) x 990mm(T) x 503mm(H) (Ohne hervorstehende Teile, einschließlich Fuß)	
Umgebungsbedingungen	Betriebstemperatur: 10°C bis 35°C Feuchtigkeit: 10-85% ohne Kondensatbildung Lagerungstemperatur: -10°C bis 50°C Feuchtigkeit : 10-85%	
Verordnungen		<Sicherheit> / <EMC>
	USA	UL60950-1 / FCC Klasse A
	Kanada	CSA60950-1 / ICES-003 Klasse A
	Europa	EN60950-1 / EN55022 Klasse A EN55024
	Ozeanien	IEC60950-1 / AS/NZS CISPR.22 Klasse A
	Japan	J60950-1 / VCCI Klasse A
	Asien	IEC60950-1 / CISPR. 22

(Hinweis 1) Wenn Sie eine andere Lampe als die optionalen Lampen von NEC verwenden, wird im Vergleich zu den optionalen NEC-Lampen eine geringere Helligkeit erzielt. Wenn die Helligkeit für Sie ein wichtiger Faktor ist, ist es empfehlenswert, die optionalen Lampen von NEC zu verwenden.
NEC stellt Informationen hinsichtlich der installierbaren Lampen anderer Hersteller auf der NEC-Homepage zur Verfügung. Beachten Sie aber, dass NEC keine Garantie für Leistung und Verlässlichkeit geben kann, wenn andere Lampen als die optionalen NEC-Lampen installiert werden.

(Hinweis 2) Zusätzlich zu den oben beschriebenen Eingangsanschlüssen, die montiert sind, wenn das Geräte geliefert wird, sind Image Media Block und Multi Media Switcher als separate Zusatzprodukte erhältlich. Eine größere Auswahl an Eingangsschnittstellen kann durch Montage dieser in Steckplatz A unterstützt werden.

(Hinweis 3) Anschluss C1 ist gegeben, wenn die Netzspannung zur Spannungsversorgung des Projektors und der Lampe über ein einzelnes Kabel zugeführt wird.
Anschluss C2 ist gegeben, wenn die Netzspannung zur Spannungsversorgung des Projektors und der Lampe über getrennte Kabel zugeführt wird.

* Beachten Sie, dass Änderungen der technischen Daten und des Designs jederzeit vorbehalten sind.

Projecteur DLP Cinema®

NC2000C

Informations Importantes

English

Deutsch

Français

中文

日本語

Voici comment utiliser les documents utilisateur fournis

Deux documents utilisateur sont fournis avec le projecteur.

Informations importantes

- Lire d'abord la section sur les informations importantes. Elle donne des informations sur la sécurité du projecteur, les précautions à observer et la localisation des pannes.

Mode d'emploi fourni avec le CD-ROM

- Le mode d'emploi complet est fourni avec le CD-ROM en format PDF (Portable Document Format) et donne des informations détaillées sur le produit et l'utilisation pour votre projecteur NEC.
  Le manuel est disponible en cinq langues (anglais, allemand, français, chinois simplifié et japonais).
  Pour visualiser ou imprimer les fichiers PDF Adobe Acrobat Reader™ ou Adobe Reader™.

REMARQUE: Adobe Reader peut être téléchargé du site Internet de Adobe.
Visiter le site http://www.adobe.com et télécharger la version actuelle correspondant à votre système d'exploitation.

- Pour visualiser le mode d'emploi (PDF)

  [Windows]

  1. Insérer le CD-ROM fourni dans le lecteur de CD-ROM de votre ordinateur.
  2. Double-cliquer sur l'icône [Poste de travail] sur le bureau de Windows.
  3. Double-cliquer sur l'icône [NECPJ-UM] CD-ROM.
  4. Double-cliquer sur l'icône [start_menu.pdf].
     - Adobe Acrobat Reader ou Adobe Reader démarre et vous permet de visualiser le menu Démarrer.
  5. Cliquer sur [Mode d'emploi].
     Le mode d'emploi s'affiche.

  [Macintosh]

  1. Insérer le CD-ROM fourni dans le lecteur de CD-ROM de votre Macintosh.
  2. Double-cliquer sur l'icône [NECPJ-UM] CD-ROM sur le bureau de votre Macintosh.
  3. Double-cliquer sur l'icône [start_menu.pdf].
     - Adobe Acrobat Reader ou Adobe Reader démarre et vous permet de visualiser le menu Démarrer.
  4. Cliquer sur [Mode d'emploi].
     Le mode d'emploi s'affiche.

- Pour copier le manuel d'utilisateur (PDF) sur votre ordinateur:

  Les mode d'emploi dans le CD-ROM fourni peuvent être copiés sur le disque dur de votre ordinateur.
  Dans le CD-ROM du mode d'emploi fourni, sélectionnez [manual] → [French] → [NC2000C_manual_F.pdf] et copiez-le sur le disque dur de votre ordinateur.

Pour plus de détails, consultez le mode d'emploi (format PDF) présent sur le CD-ROM fourni.

Informations Importantes

Précaution:

Lire attentivement ce manuel avant d'futiliser le NC2000C et le conserver à portée de main pour future référence.

Recommandations importantes

Ces instructions de sécurité ont pour but d'assurer une longue vie à votre projecteur et d'éviter un incendie ou une décharge électrique. Prière de les lire attentivement et de tenir compte de tous les avertissements.

AVERTISSEMENT

POUR EVITER UN INCENDIE OU UN RISQUE D'ELECTROCUTION NE PAS EXPOSER CET ENSEMBLE A LA PLUIE OU A L'HUMIDITE.

ATTENTION

POUR EVITER LES RISQUES D'ELECTROCUTION, NE PAS OUVRIR LE COUVERCLE. AUCUN DES ELEMENTS INTERNES NE DOIT ETRE REPARE PAR L'UTILISATEUR. NE CONFIER L'ENTRETIEN QU'A UN PERSONNEL QUALIFIE.

L'éclair fléché dans un triangle équilatéral est destiné à avertir l'utilisateur de la présence, dans l'appareil, d'une zone non-isolée soumise à une haute-tension dont l'intensité èst suffisante pour constituer un risqué d'électrocution.

Le point d'exclamation dans un triangle équilatéral est destiné à attirer l'attention de l'utilisateur sur la présence d'informations de fonctionnement et d'entretien importantes dans la brochure accompagnant l'appareil.

DOC avis de conformité

Cet appareil numérique de la classe A respecte toutes les exigences du Réglement sur le Matériel D'interférence du Canada.

Mise au rebut du produit usagé

La législation européenne, appliquée dans tous les Etats membres, exige que les produits électriques et électroniques portant la marque (à gauche) doivent être mis au rebut séparément des autres ordures ménagères. Ceci inclus les projecteurs et leurs accessoires électriques ou lampes. Lorsque vous mettez au rebut ces produits, veuillez suivre les recommandations des autorités locales et/ou demandez conseil au magasin qui vous a vendu le produit.
Une fois ces produits mis au rebut, ils sont recyclés et de manière appropriée. Cet effort nous aidera à réduire les déchets et à maintenir au niveau minimum leurs conséquences négatives sur la santé humaine et sur l'environnement.
La marque figurant sur les produits électriques et électroniques ne s'applique qu'aux Etats membres actuels de l'Union Européenne.

AVERTISSEMENT

Installation et transport

Consultez votre revendeur pour l'installation et le transport de votre projecteur. NE PAS faire installer ou transporter le projecteur par une personne non qualifiée. Vous risqueriez de briser la lampe ou de blesser quelqu'un.

- Alimentation
  - Pour l'installation du cordon d'alimentation électrique sur le projecteur, voir le concessionnaire. NE PAS intaller le cordon d'alimentation électrique soi-même. Il y a risqué d'incendie ou d'électrocution.
  - Le projecteur est conçu pour fonctionner sous la tension d'alimentation ci-dessous.
    Pour connexion C1
    (Lorsque l'alimentation secteur du projecteur et de la lampe est assurée par un seul câble)
    - CA 200-240 V monophasé 50/60 Hz

    Pour connexion C2
    (Lorsque l'alimentation secteur du projecteur et de la lampe est assurée des câbles distincts)
    - CA 100-240 V monophasé 50/60 Hz (alimentation électrique du projecteur)
    - CA 200-240 V monophasé 50/60 Hz (alimentation électrique de la lampe)

    S'assurer que la tension du secteur soit conforme à ces caractéristiques avant d'utiliser le projecteur.
  - Manipulez le câble d'alimentation avec précaution. Un câble endommagé ou égratigné peut entraîner une électrocution ou un incendie.
    - Ne pliez pas ou n'écrasez pas le câble d'alimentation de manière excessive.
    - Ne placez pas le câble d'alimentation sous le projecteur ou tout autre objet lourd.
    - Ne couvrez pas le câble d'alimentation avec d'autres matériaux doux comme des tapis.
    - Ne soumettez pas le câble d'alimentation à la chaleur.

- Eteindre le projecteur, débrancher le câble d'alimentation et contacter un personnel qualifié dans les cas suivants. Pour une connexion C2, éteignez le projecteur, arrêtez l'alimentation secteur du projecteur et la lampe à l'aide d'un disjoncteur et contactez votre concessionnaire/distributeur pour réparation.
  - Lorsque le câble d'alimentation est endommagé ou usé.
  - Du liquide a été répandu à l'intérieur du projecteur, ou ce dernier a été exposé à la pluie ou à l'eau.
  - Le projecteur ne fonctionne pas normalement lorsque vous suivez les instructions décrites dans ce mode d'emploi.
  - Le projecteur est tombé ou le boîtier a été endommagé.
  - Les performances du projecteur ont décliné, indiquant un besoin de maintenance.
- Ne placez pas le projecteur dans les endroits suivants :
  - près d'un point d'eau, d'un bain ou dans des pièces humides.
  - sur un chariot, un support ou une table instable.
  - à la lumière directe du soleil, près de chauffages ou d'appareils émettant de la chaleur.
  - dans un environnement poussiéreux, enfumé ou embué.
  - sur une feuille de papier, une carpette ou un tapis.
- Ne pas poser de liquides sur le dessus du projecteur. Confier la réparation à du personnel technique qualifié si du liquide a été renversé.
- Empêcher tous cocps étrangers tels que des attaches trombones ou des morceaux de papier de tomber à l'intérieur du projecteur. Ne pas essayer de récuperer des objets qui seraient tombés dans le projecteur. Ne pas introduire d'objets métalliques tels que fil ou un tournevis dans le projecteur. En cas de chute d'objet dans le projecteur, le débrancher immédiatement et faire enlever l'objet par un personnel technique qualifié.
  Pour une connexion C2, éteignez le projecteur, arrêtez l'alimentation secteur du projecteur et la lampe à l'aide d'un disjoncteur et contactez votre concessionnaire/distributeur.
- Ne bouchez pas l'objectif avec son couvercle fourni lorsque le projecteur est allumé. Faire cela pourrait déformer ou faire fondre le couvercle et peut-être brûler vos mains à cause de la chaleur émise par le faisceau lumineux.

ATTENTION

- La lampe à haute pression peut exploser si elle est manipulée incorrectement. Seul le personnel de service peut ouvrir le couvercle de la lampe. Confier l'entretien à du personnel technique qualifié.
- Ne pas regarder dans l'objectif lorsque le projecteur est allumé. De sérieux dommages aux yeux pourraient en résulter.
- Ne pas toucher le projecteur pendant un orage. Cela pourrait causer un choc électrique ou un incendie.
- S'assurer qu'il y ait une ventilation suffisante et que les ouvertures ne soient pas obstruées afin d'éviter des concentrations potentiellement dangereuses d'ozone et l'accumulation de chaleur à l'intérieur du projecteur.
  Laisser au moins 20 cm (8 pouces) d'espace entre le projecteur et un mur. Laisser au moins 50 cm (20 pouces) d'espace entre l'orifice de ventilation du projecteur et tout objet.
  Connecter la sortie d'air du projecteur à l'équipement d'échappement ayant une capacité de 13m^3 /min ou plus.
- Ne pas manipule le projecteur ou le câble d'alimentation avec les mains mouillées. Cela pourrait causer un choc électrique ou un incendie.
- Eteindre le courant d'alimentation CA du projecteur et déconnecter tous les câbles avant de mettre le projecteur à un autre endroit.
  Pour une connexion C2, éteignez le projecteur, arrêtez l'alimentation secteur du projecteur et la lampe à l'aide d'un disjoncteur. Déconnecter les câbles entre les appareils et la lampe avant de déplacer le projecteur.
- Pour l'installation du cordon d'alimentation électrique sur le projecteur, voir le concessionnaire. NE PAS intaller le cordon d'alimentation électrique soi-même. Il y a risqué d'incendie ou d'électrocution.
- Le transport du projecteur doit être effectué par cinq personnes au minimum.
- Ne pas manipuler l'objectif ou l'objectif anamorphoseur (ou le convertisseur à objectif grand angle) avec les mains mouillées. Le cas échéant, le projecteur risqué de se renverser ou de tomber et d'être à l'origine d'un accident corporel.
- Si le projecteur n'est pas utilisé pendant une longue période, coupez l'alimentation CA.
  Pour une connexion C2, éteignez le projecteur, arrêtez l'alimentation secteur du projecteur et la lampe à l'aide d'un disjoncteur.
- Couper l'alimentation à l'aide d'un coupe-circuit avant de nettoyer.
  Pour une connexion C2, éteignez le projecteur, arrêtez l'alimentation secteur du projecteur et la lampe à l'aide d'un disjoncteur.
- Ne pas essayer de toucher la sortie de l'aération car elle peut devenir brûlante. Cela risquerait de vous brûler les mains en raison de la chaleur produite.
- Lorsque le corps principal est endommagé, du liquide de refroidissement peut s'échapper des parties internes. NE PAS toucher ou avaler le liquide de refroidissement. Si le liquide de refroidissement est avalé ou qu'il rentre en contact avec vos yeux, veuillez consulter un médecin immédiatement.
- Lors de l'utilisation d'un câble LAN :
  Pour votre sécurité, ne raccordez pas au connecteur pour périphérique externe de câble pouvant avoir une tension excessive.

Installation

- Ne pas placer le projecteur sur le côté lorsque la lampe est allumée, sinon le projecteur risque d'être endommagé.
- Manipuler le projecteur avec précaution. La chute du le projecteur ou lui donner des chocs pourrait endommager des composants internes.
- Plus l'éclairage ambiant est contrôlé, plus l'image affichée sera contrastée et belle.
- Les écrans en partie sale, rayés ou décolorés ne permettront pas d'obtenir une image nette. Prendre soin en manipulant l'écran.
- Le transport du projecteur doit être effectué par cinq personnes au minimum. Retirez l'objectif et la lampe avant de transporter le projecteur. Ne pas faire subir de choc violent au projecteur.
- Ne pas laisser d'empreintes ou de poussière sur la surface de l'objectif. Des ombres risquent de s'afficher sur l'écran. Couvrez l'objectif à l'aide du bouchon fourni si le projecteur ne doit pas servir pendant une durée prolongée.

Précautions avec la lampe : lire avant l'utilisation

- La lampe a été scellée dans un environnement sous pression, et il y a donc un petit risque d'explosion, si elle n'est pas utilisée correctement. Le risque est minime si l'appareil est en bon ordre de marche, mais s'il est endommagé ou utilisé au-delà du nombre d'heures recommandées, le risque d'explosion augmente alors. Il est à noter l'existence d'un systéme d'avertissement intégré, lequel affiche le message "Bulb Over Time" lorsqu'un temps de fonctionnement préréglé est atteint. Si la lampe explose, de la fumée peut étre produite par les fentes d'aération situées sur l'arrière de l'appareil. Ne vous tenez pas devant les évents pendant l'opération. Cette fumée est composée de verre sous forme de particules et de gaz de Xenon, et n'est pas nuisible si elle est maintenue à distance des yeux. Si les yeux sont exposés a ce gaz, les rincer immédiatement à l'eau courante et con sulter tout de suite un médecin. Ne pas se frotter les yeux ! Cela pourrait provoquer une grave blessure.
- Consultez le personnel de service qualifié pour le nettoyage de l'intérieur du projecteur ou pour le remplacement de la lampe. Ne pas essayer de nettoyer l'intérieur du projecteur ou de remplacer la lampe soi-même.
- Ne pas couper l'alimentation du projecteur dans les cas suivants. Cela pourrait endommager le projecteur.
  - Lors de la projection d'images
  - Pendant le refroidissement après que le projecteur ait été éteinte. (La LED du voyant POWER clignote en blanc lorsque le ventilateur tourne et l'écran ACL affiche « Cooling… ». Le ventilateur du refroidissement continuent à tourner pendant 5 minutes.)

Si vous avez des questions concernant des points peu clairs ou des réparations

Contacter votre distributeur ou la branche d'assistance suivantes si vous avez des questions concernant des points à éclaircir, des défauts et des réparations du produit.

En Europe

NEC Europe, Ltd. / European Technical Centre
Adresse : Unit G, Stafford Park 12, Telford TF3 3BJ, U.K.
Téléphone : +44 1952 237000
Fax : +44 1952 237006

1. Que contient la boîte ?

Vérifiez le contenu de la boîte.

☐Projecteur NC2000C

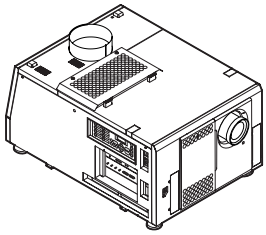

☐1 Fixation de la lampe

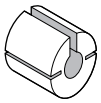

☐1 feuille de protection de la sortie d'air

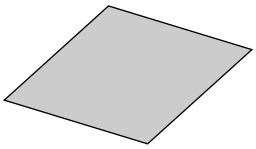

☐4 liens de fixation de la feuille de protection de la sortie d'air

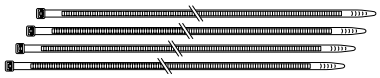

☐1 petit diaphragme

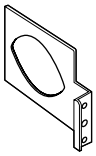

☐2 clés carter

☐2 clés pour le logement de la lampe

☐Informtions Importantes x 1

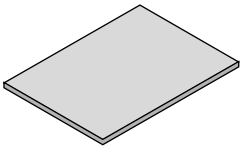

☐CD-ROM (Mode d'emploi)

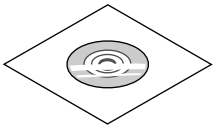

ASTUCE * Au cas où vous n'auriez pas reçu tous les accessoires indiqués ci-dessus, ou au cas où certains d'entre eux seraient endommagés, veuillez contacter votre revendeur/distributeur.
L'appareil est légèrement différent des dessins de ce manuel mais cela ne cause aucun problème pour son utilisation.

2. Dépistage des pannes

Avant de demander une réparation, veuillez vérifier de nouveau votre connexion, les réglages et le fonctionnement. Si vous ne réussissez pas à corriger le problème, veuillez contacter votre revendeur/distributeur pour obtenir des instructions ou pour qu'il vienne réaliser la réparation.

Problèmes et éléments à vérifier

Problème	Vérifiez ces éléments
Il est impossible de mettre le projecteur sous tension.	Vérifier que le projecteur est bien relié à l'alimentation électrique.
	Assurez-vous que le commutateur d'alimentation du projecteur est sur ON.
	Vérifiez si la fonction de verrouillage des touches du panneau est activée ou non. Si tel est le cas, les touches de commandes de l'unité principale sont verrouillées et ne fonctionnent pas.
	La température à l'intérieur du projecteur est-elle trop élevée ? Lorsque la température intérieure est trop élevée, la fonction de protection interdit la mise en marche du projecteur. Attendez pendant un moment puis allumez-le.
L'image ne peut pas être projetée.	Vérifiez si l'entrée connectée a bien été sélectionnée.
	Vérifiez si un câble est bien connecté à la borne d'entrée.
	Vérifiez si l'obturateur est fermé ou ouvert.
	Vérifiez si les réglages sont tous bien ajustés.
L'image est déformée.	Vérifiez si le rapporteur est bien installé.
L'image est floue.	Assurez-vous que l'objectif est bien mis au point.
	Vérifiez si l'écran et le projecteur sont installés à des angles adéquats.
	La distance de projection peut être supérieure à la plage de mise au point.
	Vérifiez si l'objectif et les autres pièces présentent de la condensation. Si le projecteur est allumé dans un endroit chaud après avoir été stocké dans un endroit froid, il se peut que de la condensation se développe sur la lentille et les autres composants optiques. Dans un tel cas, veuillez attendre plusieurs minutes jusqu'à ce que la condensation ait disparu.
L'image vidéo est perturbée	Vérifiez si le câble signal connecté au projecteur est débranché.
Le voyant STATUS clignote en rouge.	Il se peut que votre projecteur ait un problème. Veuillez contacter votre revendeur/distributeur pour obtenir des instructions.
Un code d'erreur est affiché.	Veuillez contacter votre revendeur/distributeur pour obtenir des instructions.

3. Liste d'affichage des voyants

Référez-vous aux descriptions ci-dessous lorsque vous observez le clignotement ou l'allumage fixe de l'une des quatre touches du panneau de commande ou du voyant arrière STATUS situé à l'arrière du projecteur. Le projecteur possède également une fonction d'avertissement qui utilise un avertisseur sonore.

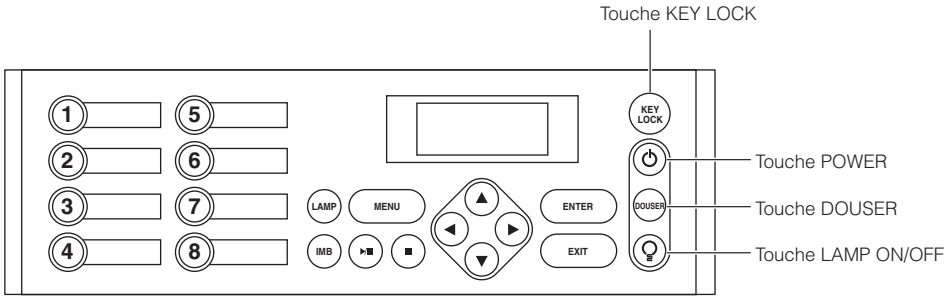

Touche KEY LOCK

Condition du voyant		Condition du projecteur	Remarque
Fixe	Blanc	Le verrouillage des touches est désactivé.	-
	Orange	Le verrouillage des touches est activé.	-

Touche POWER

Condition du voyant		Condition du projecteur	Remarque
Éteint		L'alimentation du projecteur est coupée.	-
Clignotant	Vert	Le projecteur démarre.	Attendez un instant.
	Blanc	Le projecteur refroidit.	Attendez un instant.
Fixe	Vert	Le projecteur est allumé.	-
	Blanc	Le projecteur est en veille.	-

Touche DOUSER

Condition du voyant		Condition du projecteur	Remarque
Clignotant	Blanc	L'obturateur est fermé.	-
Fixe	Vert	L'obturateur est ouvert.	-

Touche LAMP ON/OFF

Condition du voyant		Condition du projecteur	Remarque
Clignotant	Blanc	La lampe est éteinte.	-
Fixe	Vert	La lampe est allumée.	-

Voyant STATUS arrière

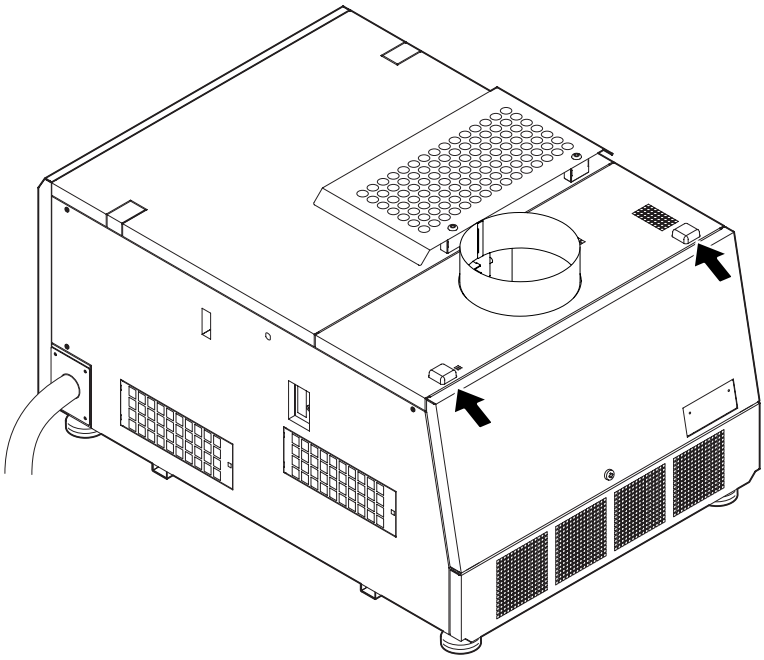

Etat du voyant

Condition du voyant		Condition du projecteur	Remarque
Eteint		L'alimentation principale est coupée.	-
Clignotant	Vert	Le projecteur s'apprête à se mettre en marche. L'obturateur est fermé. La lampe est éteinte.	Attendez un instant.
	Orange	Le projecteur est train de refroidir.	Attendez un instant.
	Rouge (Avec avertisseur sonore)	Problème de sécurité, erreur	Un message d'erreur est affiché sur l'écran LCD. Vérifiez le contenu de l'erreur.
	Rouge (Sans avertisseur sonore)	Erreur avec projection d'image possible dans certaines conditions.	
Fixe	Vert	Le projecteur est sous tension.	-
	Orange	Le projecteur est en veille.	-
	Rouge	Erreur à un niveau n'affectant pas la projection.	Un message d'erreur est affiché sur l'écran LCD. Vérifiez le contenu de l'erreur.

4. Caracteristiques techniques

Numéro du modèle	NC2000C	
Mode de projection	3 puces DLP Cinema® (puce DC2K 0,98 pouce)	
Résolution du panneau	2048 x 1080	
Type de lampe	Lampe xenon 4kW (Remarque 1)	
Tailles d'écran	5m à 20m (Largeur) (Dépend des conditions de configuration)	
Rapport de contraste	Plus de 2200 : 1	
Fonction de réglage de l'objectif	Commande du mouvement horizontal et vertical de l'objectif à moteur, Commande du zoom et de la mise au point à moteur, obturateur	
Ports d'entrée des signaux (Remarque 2)	Slot B	Carte d'entrée de signal (NC-80LB01) montée en standard SDI (4) BNC (SMPTE 292M, 372M) RGB NUMÉRIQUE (2) DVI-D 24broches (spécifications TMDS)
	Slot A	Lors de l'expédition depuis l'usine : vide (pour montage de composants en option)
Commande extérieure	RS-232C D-sub 9 broche x 1 Port GPIO D-sub 37 broche x 1 Miniprise stéréo du port d'entrée de la télécommande x 1 3D CTL D-sub 15 broche x 1 USB Type A x 1 Port de sécurité x 1 Port Ethernet G-bit RJ-45 x 1 Anamorphic Lens Turret control port x 1	
Alimentation électrique	Pour connexion C1 (Remarque 3)	Monophasé CA 200-240 V 50/60 Hz 30 A (alimentation électrique du projecteur + alimentation électrique de la lampe)
	Pour connexion C2 (Remarque 3)	Monophasé CA 100-240 V 50/60 Hz 5–2,5 A (alimentation électrique du projecteur) Monophasé CA 200-240 V 50/60 Hz 27 A (alimentation électrique de la lampe)
Puissance absorbée	5500W	
Mode de refroidissement	Système à liquide de refroidissement, Système de refroidissement par air (comprend un filtre anti-poussière)	
Niveau de bruit	Moins de 62dB	
Installation	Orientation : Bureau/Avant, Bureau/Arrière	
Poids net	99 kg(sans objectif)	
Dimensions	700mm(l) x 990mm(p) x 503mm(h) (Ne comprend pas les parties saillantes Comprend le pied)	
Environnement	Température de service : 10° à 35°C Humidité : 10-85% (sans condensation) Température de magasinage: -10° à 50°C Humidité : 10-85%	
Réglementations		<Sécurité> <EMC>
	USA	UL60950-1 FCC Classe A
	Canada	CSA60950-1 ICES-003 Classe A
	Europe	EN60950-1 EN55022 Class A EN55024
	Océanie	IEC60950-1 AS/NZS CISPR.22 Classe A
	Japon	J60950 VCCI Classe A
	Asie	IEC60950-1 CISPR. 22

(Remarque 1) L'utilisation d'une lampe autre que les lampes optionnelles NEC aura pour conséquence une luminosité inférieure à celle des lampes optionnelles NEC. Si la luminosité est un critère important, nous vous recommandons d'utiliser les lampes optionnelles NEC.
NEC affichera sur sa page Internet les informations concernant les lampes, autres que les lampes optionnelles NEC, pouvant être installées. Veuillez noter que NEC ne garantit pas le bon fonctionnement et la fiabilité lorsque des lampes autres que les lampes optionnelles NEC sont installées.

(Remarque 2) Outre les ports d'entrée décrits ci-dessus et qui sont montés à l'expédition de l'appareil, Image Media Block et Multi Media Switcher sont disponibles en tant que produits distincts en option. Une plus large gamme d'interfaces peut être prise en charge en les montant dans le slot A.

(Remarque 3) La connexion C1correspond au cas où l'alimentation électrique du projecteur et de la lampe est assurée par un seul câble.
La connexion C2 correspond au cas où l'alimentation électrique du projecteur et de la lampe est assurée par des câbles distincts.

* Veuillez noter que l'apparence et les caractéristiques peuvent être modifiées sans avertissement préalable.

DLP Cinema® 放映机

NC2000C+

重要信息

English

Deutsch

Français

中文

日本語

如何使用随机附带的用户文档

本放映机内附带两本用户文档。

重要信息

- 首先要阅读重要信息。其中包括放映机安全、注意事项以及故障排除的有关信息。

CD-ROM 上的用户手册

- 整个用户手册以 PDF (Portable Document Format) 格式附带在 CD-ROM 上，并提供有关 NEC 放映机的详细产品信息以及使用信息。
  本手册有 5 种不同语言版本 (英文、德文、法文、中文和日文)。
  需要用 Adobe Acrobat Reader™ 或 Adobe Reader™ 来浏览或打印 PDF 文件。

注：从 Adobe 的网站下载 Adobe Reader。
请访问 http://www.adobe.com，获取操作系统的最新版本。

- 浏览用户手册 (PDF):

  [Windows]

  1. 将随机附带的 CD-ROM 放入电脑的 CD-ROM 驱动器。
  2. 双击 Windows 桌面上的 [我的电脑] 图标。
  3. 双击 [NECPJ-UM] CD-ROM 图标。
  4. 双击 [start_menu.pdf]。
     - 将启动 Adobe Acrobat Reader 或 Adobe Reader，并可以浏览开始菜单。
  5. 点击 [用户手册]。
     显示用户手册。

  [Macintosh]

  1. 将随机附带的 CD-ROM 放入 Macintosh 电脑的 CD-ROM 驱动器。
  2. 双击 Macintosh 电脑桌面上的 [NECPJ-UM] CD-ROM 图标。
  3. 双击 [start_menu.pdf]。
     - 将启动 Adobe Acrobat Reader 或 Adobe Reader，并可以浏览开始菜单。
  4. 点击 [用户手册]。
     显示用户手册。

- 拷贝用户手册 (PDF) 到您的电脑:

  可以将随机附带的 CD-ROM 上的用户手册拷贝到您电脑的硬盘。
  从随机附带的 User's Manual CD-ROM 中选择 [manual] → [Simplified_Chinese] → [NC2000C_manual_SC.pdf]，然后拷贝到您的电脑硬盘。

有关更多详细信息，请参见随机附带的 CD-ROM 上的用户手册 (PDF 格式)。

重要信息

注意事项：

使用 NC2000C+ 之前请仔细阅读此手册，并保存好本手册以便以后参考。

重要安全措施

这些安全指示可令本放映机维持长久的使用寿命，并可防止火灾和电击。请仔细阅读并留意所有的警告。

警告

为了防止火灾或者电击，应避免放映机淋雨或者暴露在潮湿之处。

注意

为减少电击危险，不要打开机壳。内部没有用户可用部件。有关维修事宜请委托给有资格的 NEC 维修服务人员 。

本符号用来警告用户：放映机内的未绝缘电压可能足以导致电击。因此，请勿接触放映机内部的任何部件，以防发生危险。

本符号用来提醒用户：包含有关放映机操作及维护的重要信息。
应仔细阅读本信息，以免发生问题。

注意

- 为了减少无线电视接收的干扰，请使用附带铁氧体磁芯的信号线。使用没有附带铁氧体磁芯的信号线可能会引起无线电视接收的干扰。

警告

安装和运输

有关安装和运输放映机，请咨询您的经销商。请不要由非专业人员安装或运输放映机。这样可能会导致灯泡损坏或造成人身伤害。

- 电源
  - 安装电源线到放映机时，请咨询您的经销商。不要自己安装电源线，这样可能会引起火灾或电击。
  - 放映机被设计成按以下说明的电源电压进行操作。
    对于 C1 连接
    (当连接至放映机电源和灯泡电源的交流电源由同一根缆线提供时)
    - AC 200V-240V 单相位 50/60Hz

    对于 C2 连接
    (当连接至放映机电源和灯泡电源的交流电源由不同的缆线提供时)
    - AC 100V-240V 单相位 50/60Hz (放映机电源)
    - AC 200V-240V 单相位 50/60Hz (灯泡电源)

    在使用放映机之前，请确定您的电源符合以上要求。
  - 小心使用电源线。破损或磨损的电源线可能引起电击或火灾。
    - 切勿过度弯曲或拉扯电源线。
    - 切勿把电源线放在放映机或其它重物下面。
    - 切勿用其它软材料如毯子覆盖电源线。
    - 切勿加热电源线。
- 在下列情况下需关闭放映机，用断路器断开交流电源并与有维修资格的维修服务人员联系。对于 C2 连接，关闭放映机，使用断路器断开连接至放映机和灯泡的交流电源，并联系您的经销商 / 分销商进行维修。
  - 当电源线损坏或磨损时。
  - 如果有液体流入放映机或放映机被暴露于雨水。
  - 如果您按照用户手册里的说明操作，但放映机还不能正常工作。
  - 如果放映机被摔到地上或机箱破损。
  - 如果放映机性能有显著改变，表明需要维修了。

- 请勿将本放映机放置在下列环境中:
  - 靠近水、浴池或潮湿的房间。
  - 不稳定的车、架子或桌子上。
  - 阳光直射、靠近加热装置或热辐射装置的地方。
  - 多尘、多烟或多蒸汽的环境。
  - 纸张或布上、垫子或地毯上。
- 不要在放映机顶上放置任何液体，若液体泼洒进机箱请委托有维修资格的维修服务人员进行维修。
- 勿让纸夹和纸屑等异物掉入放映机内。切勿试图找回可能掉入放映机内的任何物品。切勿将铁丝或者螺丝起子等金属物体插入放映机内。若发现有物体掉入放映机内部，须立即断开电源，然后委托有维修资格的维修服务人员取出物体。
  对于 C2 连接，关闭放映机，使用断路器断开连接至放映机和灯泡的交流电源，并联系您的经销商 / 分销商。
- 放映机开启状态下，切勿使用随机提供的镜头盖或类似物盖上镜头。否则投射光线释放的热量可能导致镜头盖变形或熔毁，也有可能灼伤手部。

注意

- 不当操作会引起高压灯泡爆炸。
  只有专业的维修服务人员可打开灯箱。
  请委托有维修资格的维修服务人员进行维修。
- 切勿在放映机启动状态下窥视镜头。此举会导致眼睛严重受损。
- 雷雨期间不要触摸放映机，这样可能会引起火灾或电击。
- 为避免可能有害浓度的臭氧和热气积聚在放映机内部，须确保通风状态良好且通风口不被阻塞。
  在放映机和墙壁之间至少需留出 20 cm 间隔。放映机的通风口和物体之间至少需要留出 50 cm 间隔。
  在放映机通风口连接具有 13 m^3/min 或 13 m^3/min 以上的通风装置。
- 切勿用湿手触摸放映机和电源线。这样可能引起电击或火灾。
- 移动放映机之前要关闭放映机的交流电源并断开所有电线。
  对于 C2 连接，关闭放映机，使用断路器断开连接至放映机和灯泡的交流电源。在移动放映机之前，请先断开各设备与灯泡之间的缆线。
- 有关如何安装电源线到放映机，请咨询您的经销商。切勿自行安装电源线。这样可能会引起火灾或电击。
- 要搬运放映机，至少需要五个人。
- 切勿用手握住镜头部位和失真镜头部位 (或者广角镜头部位) 。否则，放映机可能会掉落，从而导致人身伤害。
- 如果放映机很长时间不使用，请关闭交流电源。
  对于 C2 连接，关闭放映机，使用断路器断开连接至放映机和灯泡的交流电源。
- 清洁之前请使用断路器断开交流电源。
  对于 C2 连接，关闭放映机，使用断路器断开连接至放映机和灯泡的交流电源。
- 请不要触摸通风口，因为放映机启动时可能发热。
  否则，释放的热量可能导致灼伤手部。
- 当机箱主体被破坏时，冷却液可能会从内部流出。不要触摸和喝冷却液。在喝下冷却液或接触到眼睛时，请立即咨询医生。
- 使用 LAN 缆线时:
  使用局域网线时，为安全起见，不要连接可能有过电压的外设线路。

安装

- 当灯泡开着时，放映机不可以侧放，这样做可能会损坏放映机。
- 小心拿好放映机。放映机掉落或震动可能会损害内部部件。
- 可控制的周围光环境将允许显示更高对比度和深度的图像。
- 屏幕一旦出现污垢、划伤或脱色区域，就不能生成清晰的图像。处理屏幕时要小心。
- 要搬运放映机，至少需要五个人。请在搬运放映机之前卸下镜头和灯泡。请勿对放映机造成严重震动。
- 除去镜头表面的指纹和灰尘。留有指纹或灰尘可能会导致屏幕上出现不必要的阴影。
  如果放映机很长时间不使用，请用随机附带的镜头盖盖上镜头。

灯泡注意：操作前请仔细阅读

- 因为灯泡密封在加压环境下，若操作不当会有最小的爆炸危险，如果按照正常工作流程操作，灯泡爆炸的几率会很小，但是如果超过建议时间进行操作或有损害，爆炸的危险会增加。请注意本放映机内置报警系统，当您使用到预置的使用时间，报警系统会显示如下信息，“Bulb Over Time”(灯泡超时)。当您看到此信息时请联系您的经销商进行更换。
  若灯泡真的爆炸了，烟会从位于放映机后部的通风口排放出来。操作期间不要站在通风口前面。烟是由微粒状玻璃和氙气组成，若眼睛不接触烟雾就不会引起对眼睛的伤害。若您的眼睛暴露于此气体中，请立即用水冲洗您的眼睛，并尽快寻求医务治疗。不要揉眼睛！会引起极大伤害 。

- 有关如何清洁放映机内部或更换灯泡，请咨询有维修资格的维修服务人员。切勿自己设法清洁放映机内部或更换灯泡。

- 在下列情况下请不要断开放映机的交流电源。这样会损害放映机。
  - 当投影图像时。
  - 关掉放映机后正在冷却时。(风扇转动，POWER 键 LED 闪烁白色。LCD 屏幕显示“Cooling...”(冷却 ...)。冷却风扇继续工作 5 分钟。)

关于不清楚地方或维修的问题

关于不清楚的地方、故障或产品维修，请联系经销商或支持的分支机构。

1. 包装箱内有哪些物件?

确认包装箱内下列各项物件是否齐全。

□NC2000C+ 放映机

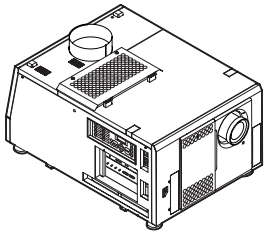

□灯泡附件 x 1

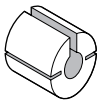

□排气口保护片 x 1

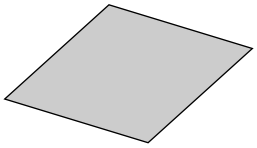

□排气口保护片扎带 x 4

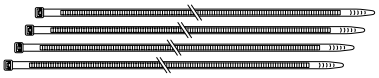

□小光阑 x 1

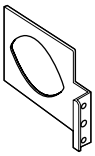

□盖钥匙 x 2

□灯箱钥匙 x 2

□重要信息 x 1

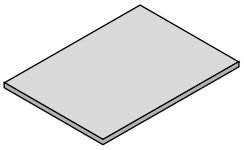

□CD-ROM (用户手册)

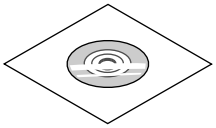

提示 * 当您没有收到以上描述的物件或者其中一些有损坏时，请联系您的经销商 / 分销商。
物件与手册中的图形略微有些不同，但实际使用时没有任何问题。

2. 故障排除

要求维修前，请再检查一下连接、设置和操作。如果不能更正问题，请联系您的经销商 / 分销商请求指导或维修。

常见问题和检查项目

问题	检查以下项目
不能开机	检查是否为放映机提供了交流电源。
	确定放映机电源开关开启。
	检查“Panel Key Lock”（面板按键锁定）设置是否有效，如果“Panel Key Lock”（面板按键锁定）有效，那么放映机主机上的按键就被锁定无法使用。
	放映机内部温度是不是过高？内部温度过高时，保护功能会阻止启动放映机。等一段时间再启动。
不出图像	查看是否已选连接输入。
	查看缆线是否正确连接到输入终端。
	查看遮光板是否关闭。
	查看是否所有设置都进行了适当调整。
图像变形	检查放映机的角度设置是否正确。
图像不清晰	确保镜头正确对焦。
	查看屏幕和放映机是否以合适的角度安装。
	投射距离可能比调焦范围更大。
	查看镜头和别的部件上面是否有结露。如果在较冷的地方放置后再放在温暖的地方开启放映机，镜头和别的内部光学部件可能会产生结露。这种情况下，请等几分钟直到结露消失。
视频图像干扰	检查连接到放映机的信号缆线是否断开。
STATUS 指示灯闪烁红色	您的放映机可能有问题。请联系您的经销商/分销商要求指导。
显示错误编码	请联系您的经销商/分销商要求指导。

3. 指示灯显示清单

当控制面板上四个按键中的任何按键或放映机背面的背部 STATUS 指示灯亮起或闪烁时，请参见以下说明。本放映机也有蜂鸣器的警告功能。

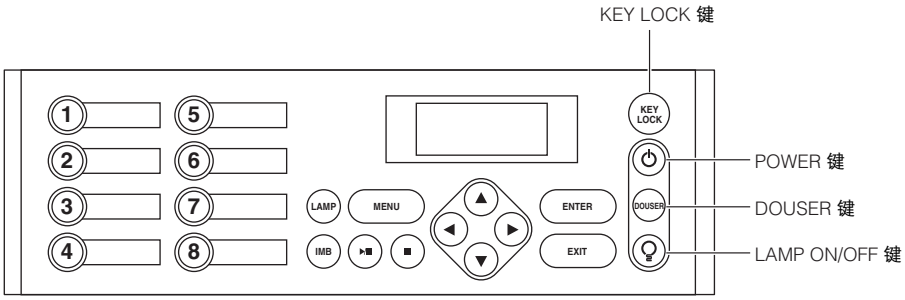

KEY LOCK 键

指示灯状态		放映机状态	注
持续点亮	白色	按键锁定关闭。	-
	橙色	按键锁定开启。	-

POWER 键

指示灯状态		放映机状态	注
熄灭		放映机电源关闭。	-
闪烁	绿色	放映机正在启动。	稍等片刻。
	白色	放映机正在冷却。	稍等片刻。
持续点亮	绿色	放映机已启动。	-
	白色	放映机处于待机状态。	-

DOUSER 键

指示灯状态		放映机状态	注
闪烁	白色	遮光板已关闭。	-
持续点亮	绿色	遮光板已打开。	-

LAMP ON/OFF 键

指示灯状态		放映机状态	注
闪烁	白色	灯泡熄灭。	-
持续点亮	绿色	灯泡点亮。	-

背部 STATUS 指示灯

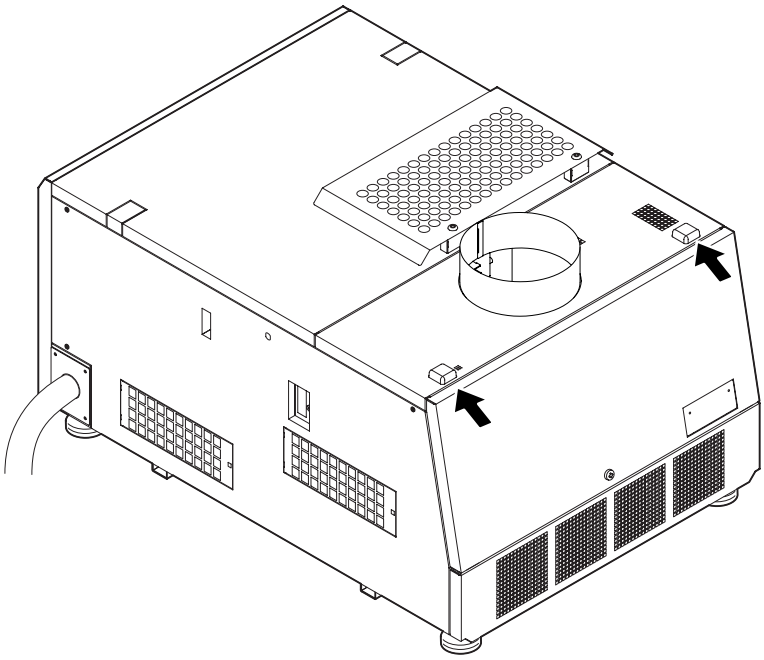

指示灯状态		放映机状态	注
熄灭		总电源关闭。	-
闪烁	绿色	放映机正准备启动。 遮光板关闭。 灯泡熄灭。	稍等片刻。
	橙色	放映机正在冷却。	稍等片刻。
	红色 (带蜂鸣器)	安全问题，错误	错误信息显示在液晶屏幕上。 检查错误内容。
	红色 (不带蜂鸣器)	特定状态下可能的图像投射问题。	
持续点亮	绿色	放映机启动。	-
	橙色	放映机待机。	-
	红色	不影响投影级别的错误。	错误信息显示在液晶屏幕上。 检查错误内容。

4. 规格

型号	NC2000C+	
投影方法	3 芯片 DLP Cinema® 方法 (0.98 英寸 DC2K 芯片)	
面板分辨率	2048 x 1080	
灯泡类型	4.0 kW 氙气灯 (注1)	
屏幕尺寸	5 m 至 20 m (宽) (依据设置条件而定)	
对比度	2200:1 或以上	
镜头调整功能	电动镜头位移 (垂直/水平)、电动变焦、电动聚焦、遮光板	
信号输入端口 (注2)	插槽 B	信号输入板 (NC-80LB01) 已作为标配安装 SDI (4) BNC (SMPTE 292M, 372M) RGB DIGITAL (2) DVI-D 24 针 (TMDS 规格)
	插槽 A	出厂时: 闲置 (用于安装选配件)
外部控制	RS-232C D-sub 9 针 x 1 GPIO 端口 D-sub 37 针 x 1 遥控器输入端口立体声迷你插孔 x 1 3D CTL D-sub 15 针 x 1 A型 USB x 1 联锁端口 x 1 以太网端口 G-bit RJ-45 x 1 失真镜头转台控制端口 x 1	
电源	对于 C1 连接 (注3)	单相位 AC 200V-240V 50/60Hz 30A (放映机电源 + 灯泡电源)
	对于 C2 连接 (注3)	单相位 AC 100V-240V 50/60Hz 5-2.5A (放映机电源) 单相位 AC 200V-240V 50/60Hz 27A (灯泡电源)
功率	5500 W	
冷却方法	冷却液系统，冷却气系统 (包括灰尘过滤网)	
噪音级别	低于 62 dB	
安装	方位 : 桌面/正投，桌面/背投	
净重	99 kg (不包括镜头)	
尺寸	700 mm (宽) x 990 mm (深) x 503 mm (高) (不包括突出部分，但包括支脚)	
环境	操作温度 : 10 至 35˚C 操作湿度 : 10 至 85% (非结露) 存储温度 : -10 至 50˚C 存储湿度 : 10 至 85%	

(注1) 不用 NEC 的可选灯泡而用其它灯泡时，灯泡亮度会比使用 NEC 可选灯泡时低一些。
如果对您来讲亮度比较重要的话，建议使用 NEC 可选灯泡。
关于除 NEC 可选灯泡以外的其它安装灯泡，NEC 会把有关信息贴在网页上。
安装非 NEC 可选灯泡时，NEC 不担保产品的性能和可靠性。

(注2) 除了该设备出厂时安装的上述输入端口之外，我们还提供另售的可选产品 Image Media Block (图像媒体模块) 和 Multi Media Switcher (多媒体转换器)。在插槽 A 安装这些可选产品之后，可以支持各种各样的输入接口。

(注3) C1 连接是指连接至放映机电源和灯泡电源的交流电源由同一根缆线提供的连接方式。
C2 连接是指连接至放映机电源和灯泡电源的交流电源由不同的缆线提供的连接方式。

* 注意这些规格和设计的变更不做另行通知。

有毒有害物质或元素的名称及含量

部件名称	有毒有害物质或元素					
	铅 (Pb)	汞 (Hg)	镉 (Cd)	六价铬 (Cr (VI))	多溴联苯 (PBB)	多溴二苯醚 (PBDE)
光学部件 *1	×	○	○	○	○	○
实装电气部件 *2	×	○	○	○	○	○
框体、结构部件	×	○	○	○	○	○
灯泡组件	×	○	○	○	○	○
其他 (线缆及其他)	×	○	○	○	○	○

○： 表示该有毒有害物质在该部件所有均质材料中的含量均在 SJ/T11363-2006 标准规定的限量要求以下。
×： 表示该有毒有害物质至少在该部件的某一均质材料中的含量超出 SJ/T11363-2006 标准规定的限量要求。
备注：
*1： 光学部件是指光学玻璃、显示设备、反射透镜等。
*2： 实装电气部件是指电路板、内置线缆、FAN、电源、传感器等。

[MEMO]

DLP Cinema® Projector

NC2000C

Important Information

English

Deutsch

Français

中文

日本語

はじめに

このたびは、NC2000C（以降「NC2000C本体」を「本機」または「プロジェクター」と呼びます）をお買い上げいただき誠にありがとうございます。
本機を安全に正しく使用していただくため、ご使用の前に、この取扱説明書（本書）をよくお読みください。
取扱説明書は、いつでも見られる所に大切に保存してください。万一ご使用中にわからないことや故障ではないかと思ったときにお読みください。

この装置は、クラスA情報技術装置です。この装置を家庭環境で使用すると電波妨害を引き起こすことがあります。この場合には使用者は適切な対策を講ずるよう要求されることがあります。

VCCI-A

- DLP（Digital Light Processing）、DLP Cinema は、Texas Instruments Incorporated の登録商標です。
- CineLink、CineCanvas、CinePallette、CineBlack は、Texas Instruments Incorporated の商標です。
- その他取扱説明書に記載のメーカー名および商品名は、各社の登録商標または商標です。
- 本書に載せているイラストや表示画面は、実際と多少異なる場合があります。

ご注意

（1）本書の内容の一部または全部を無断転載することは禁止されています。
（2）本書の内容に関しては将来予告なしに変更することがあります。
（3）本書は内容について万全を期して作成いたしましたが、万一ご不審な点や誤り、記載もれなどお気付きのことがありましたらご連絡ください。
（4）本機の使用を理由とする損害、逸失利益等の請求につきましては、当社では（3）項にかかわらず、いかなる責任も負いかねますので、あらかじめご了承ください。
（5）乱丁、落丁はお取り替えいたします。

取扱説明書（PDF形式）は、User's Manual CD-ROMに収録しています。

説明書の使いかた

本機には、次の 2 種類の説明書が添付されています。

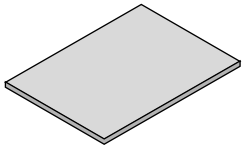

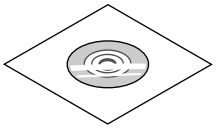

●Important Information(本書)

添付品や故障かな？と思ったときの対処方法などを記載しています。
また、安全のために守っていただきたいことについて記載しています。

●取扱説明書(User' s Manual CD-ROM内)

本機の機能を説明しています。

User' s Manual CD-ROMにPDF(Portable Document Format)形式で収録しています。PDF閲覧ソフトウェアAcrobat Reader 5.0以上(またはAdobe Reader)を使って閲覧してください。

注意

- User' s Manual CD-ROMにAcrobat ReaderおよびAdobe Readerは収録していません。お使いのパソコンでPDFが開けない場合は、アドビシステムズ(株)のホームページからAdobe Readerをダウンロードしてパソコンにインストールしてください。

●取扱説明書を閲覧する

Windowsの場合

1 User' s Manual CD-ROMをパソコンのCD-ROMドライブにセットする。
2 Windowsのデスクトップ画面で[マイコンピュータ]をダブルクリックする。
3 「NECPJ-UM」(CD-ROMアイコン)をダブルクリックする。
4 「start_menu.pdf」をダブルクリックする。
Acrobat Reader(またはAdobe Reader)が起動し、スタートメニューが表示されます。

5 「取扱説明書」をクリックする。
取扱説明書が表示されます。

Macintoshの場合

1 User' s Manual CD-ROMをパソコンのCD-ROMドライブにセットする。
2 デスクトップ画面で「NECPJ-UM」(CD-ROMアイコン)をダブルクリックする。
3 「start_menu.pdf」をダブルクリックする。
Acrobat Reader(またはAdobe Reader)が起動し、スタートメニューが表示されます。
4 「取扱説明書」をクリックする。
取扱説明書が表示されます。

●取扱説明書[詳細版]のPDFをパソコンにコピーする

User' s Manual CD-ROMに収録されている取扱説明書のPDFは、パソコンのハードディスクにコピーすることができます。
CD-ROM内の[manual]フォルダ→[Japanese]フォルダの中にある「NC2000C_manual_J.pdf」をパソコンのハードディスクにコピーしてください。

絵表示について

この取扱説明書および製品への表示では、製品を安全に正しくお使いいただき、あなたや他の人々への危害や財産への損害を未然に防止するために、いろいろな絵表示をしています。その表示と意味は次のようになっています。内容をよく理解してから本文をお読みください。

⚠	警告	この表示を無視して、誤った取り扱いをすると、人が死亡や大けがをするなど人身事故の原因となります。
⚠	注意	この表示を無視して、誤った取り扱いをすると、人がけがをしたり周囲の家財に損害をあたえたりすることがあります。

絵表示の例		
		△ 記号は注意（警告を含む）をうながすことを表しています。 図の中に具体的な注意内容（左図の場合は感電注意）が描かれています。
		⃠ 記号はしてはいけないことを表しています。 図の中に具体的な禁止内容（左図の場合は分解禁止）が描かれています。
		● 記号はしなければならないことを表しています。 図の中に具体的な指示内容が描かれています。

⚠ 警告

設置および輸送について

・プロジェクターの設置および輸送については、販売店にご相談ください。
お客様による設置および輸送は絶対におやめください。高圧ランプが破裂したり、転倒したりしてけがの原因となります。

電源コードの取り付けについて

・電源コードの取り付けは、販売店にご依頼ください。お客様による取り付けは絶対にしないでください。火災・感電の原因となります。

決められた電圧以外で使用しない

・以下に示す電源電圧以外で使用しないでください。火災・感電の原因となります。
C1接続の場合
（プロジェクター電源とランプ電源へAC電源を1本のケーブルで供給する場合）
・AC 200V-240V 単相 50/60Hz
C2接続の場合
（プロジェクター電源とランプ電源へ別々の電源ケーブルでAC電源を供給する場合）
・AC 100V-240V 単相 50/60Hz
（プロジェクター電源）
・AC 200V-240V 単相 50/60Hz
（ランプ電源）

電源コードの取り扱いは大切に

・電源コードは大切に取り扱ってください。コードが破損すると、火災・感電の原因となります。
・コードの上に重い物をのせない。
・コードをプロジェクターの下敷きにしない。
・コードの上を敷物などで覆わない。
・コードを傷つけない、加工しない。
・コードを無理に曲げたり、ねじったり、引っ張ったりしない。
・コードを加熱しない。
・設置されたコードの配置を変更しない。
電源コードが傷んだら（芯線の露出・断線など）販売店に交換をご依頼ください。

故障したときはAC電源を遮断する

AC電源を遮断する

・煙が出ている、変なにおいや音がする場合、キャビネットを破損した場合は、本体の電源を切り、本体へのAC電源の供給を遮断器などで遮断してください。火災・感電の原因となります。販売店へ修理をご依頼ください。
C２接続の場合、まず本体の電源を切り、プロジェクター電源およびランプ電源へのAC電源の供給をそれぞれ遮断器などで遮断して、販売店へ修理をご依頼ください。

次のような所では使用しない

・次のような所では使用しないでください。火災・感電の原因となります。
・ぐらついた台の上、傾いた所など、不安定な場所
・暖房の近くや振動の多い所
・湿気やほこりの多い場所
・油煙や湯気の当たるような場所
・調理台や加湿器のそば

⚠ 警告

水場や水にぬれるような所には置かない

水ぬれ禁止

・次のような水にぬれるようなおそれがある所では使用しないでください。またプロジェクターの上に水の入った容器を置かないでください。火災・感電の原因となります。
　・雨天や降雪中、海岸や水辺で使用しない。
　・風呂やシャワー室で使用しない。
　・プロジェクターの上に花びん、植木鉢を置かない。
　・プロジェクターの上にコップ、化粧品、薬品を置かない。

万一プロジェクターの内部に水などが入った場合は、まず本体の電源を切り、本体へのAC電源の供給を遮断器などで遮断して、販売店にご連絡ください。
C2接続の場合、まず本体の電源を切り、プロジェクター電源およびランプ電源へのAC電源の供給をそれぞれ遮断器などで遮断して、販売店にご連絡ください。

内部に物を入れない

異物挿入禁止

・プロジェクターの通風孔などから内部に金属類や燃えやすいものなど異物を差し込んだり、落し込んだりしないでください。火災・感電の原因となります。
万一異物がプロジェクター内部に入った場合は、まず本体の電源を切り、本体へのAC電源の供給を遮断器などで遮断して、販売店にご連絡ください。
C2接続の場合、まず本体の電源を切り、プロジェクター電源およびランプ電源へのAC電源の供給をそれぞれ遮断器などで遮断して、販売店にご連絡ください。

キャビネットは絶対にあけない

分解禁止

・プロジェクターのキャビネットを外したり、あけたりしないでください。また改造しないでください。火災・感電の原因となります。
内部の点検・調整・修理は販売店にご相談ください。

ランプドアは開けない

・プロジェクターの内部には高圧ランプがあります。破裂のおそれがありますので、サービスマン以外はランプドアを開けないでください。
ランプの取り付け・取り外しは、販売店にご相談ください。

プロジェクターのレンズをのぞかない

レンズをのぞかない

・プロジェクターのレンズをのぞかないでください。動作中は強い光が投写されていますので、目を痛める原因となります。

雷が鳴りだしたら、本体に触れない

・雷が鳴りだしたら、本体に触れないでください。感電の原因となります。

動作中にレンズキャップをしない

・動作中にレンズにふたをしないでください。ふたの部分が高温になり、変形したり、溶けたりします。
・動作中にレンズの前に物を置かないでください。物が高温になり、破損や火災の原因となります。

⚠ 注意

機器のアースは確実にとってください

・機器の安全確保のため、機器のアースは確実にとってご使用ください。

通風孔をふさがない

・プロジェクターの通風孔をふさがないでください。またプロジェクターの下に紙や布などの柔らかい物を置かないでください。火災の原因となることがあります。
・プロジェクターを設置する場所は周囲から適当な空間をあけてください。目安として20cm以上の空間をあけてください。
特に排気口の前は 50cm 以上の空間をあけてください。
・プロジェクターの排気口は、流量13m³/min以上の排気設備に接続してください。

ぬれた手で本体に触れない

ぬれた手は危険

・ぬれた手で本体や電源コードに触れないでください。感電の原因となることがあります。

移動するときはAC電源を遮断する

AC電源を遮断する

・移動させる場合は、本体の電源を切り、必ず本体へのAC電源の供給を遮断器などで遮断して、機器間の接続ケーブルとランプを外したことを確認のうえ、行ってください。
C2接続の場合、本体の電源を切り、プロジェクター電源およびランプ電源へのAC電源の供給をそれぞれ遮断器などで遮断してください。その後、機器間の接続ケーブルとランプを外したことを確認したうえで、移動を行ってください。
・お客様によるランプの取り付け・取り外しは絶対にしないでください。ランプの取り付け・取り外しは、販売店にご相談ください。

移動するときは本体の底面を持つ

・プロジェクターを移動するときは5人以上で行ってください。
・本機を移動するときは、必ず本体の底面を持ってください。レンズやアナモフィックレンズ用(またはワイドコンバータレンズ用)の取付金具を持つと、レンズや取付金具が破損したり本体が落下したりしてけがの原因となることがあります。

長期間使用しないときは、AC電源を遮断する

AC電源を遮断する

・長期間、プロジェクターをご使用にならないときは安全のため必ず本体の電源を切り、本体へのAC電源の供給を遮断器などで遮断してください。
C2接続の場合、本体の電源を切り、プロジェクター電源およびランプ電源へのAC電源の供給をそれぞれ遮断器などで遮断してください。

⚠ 注意

お手入れの際はAC電源を遮断する

AC電源を遮断する

・お手入れの際は、安全のため本体の電源を切り、本体へのAC電源の供給を遮断器などで遮断してください。
C2接続の場合、本体の電源を切り、プロジェクター電源およびランプ電源へのAC電源の供給をそれぞれ遮断器などで遮断してください。

投写中は排気口に触らない

・投写中および投写終了直後は、排気口付近を触らないでください。排気口付近と本体後方部が高温になるため、やけどの原因となることがあります。

点検・工事について

内部の清掃を販売店で

・1年に一度くらいは内部の清掃を販売店などにご相談ください。プロジェクターの内部にほこりがたまったまま、長い間清掃をしないと火災や故障の原因となることがあります。
特に湿気の多くなる梅雨期の前に行うと、より効果的です。なお、内部の清掃費用につきましては販売店などにご相談ください。

冷却液には触れない

・本体が破損した場合、内部から冷却液が漏れ出る場合があります。漏れ出た冷却液は、飲んだり触れたりしないでください。万一口や目に冷却液が入ってしまった場合は、すみやかに医師に相談してください。

過電圧が加わるおそれのあるネットワークには接続しない

・本機のLANポートは、過電圧が加わるおそれのないネットワークに接続してください。
LANポートに過電圧が加わると、感電の原因となることがあります。

お願い

■性能確保のため、次の点にご留意ください。

・振動や衝撃が加わる場所への設置は避けてください。
動力源などの振動が伝わる所に設置したり、車両、船舶などに搭載すると、本機に振動や衝撃が加わって内部の部品がいたみ、故障の原因となります。
振動や衝撃の加わらない場所に設置してください。
・高圧電線や動力源の近くに設置しないでください。
高圧電線、動力源の近くに設置すると、妨害を受ける場合があります。
・本機を長時間連続して使用される場合
たばこの煙・ほこりの多い場所で使用する場合は、あらかじめ当社にご相談ください。
・本機は、本体を左右方向に傾けて使用しないでください。故障の原因となります。
・スクリーンへの外光対策をしてください。
スクリーンには、照明など本機以外からの光が入らないようにしてください。
外光が入らないほど、ハイコントラストで美しい映像が見られます。
・スクリーンについて
ご使用のスクリーンに汚れ、傷、変色などが発生すると、きれいな映像が見られません。
スクリーンに揮発性のものをかけたり、傷や汚れが付かないよう取り扱いにご注意ください。
・プロジェクターの移動について
5人以上で、必ず本体の底面を持って運んでください。その際、レンズとランプはプロジェクター本体から取り外してください。
また、プロジェクターに強い衝撃を与えないでください。
・投写レンズ面は素手でさわらないでください。
投写レンズ面に指紋や汚れが付くと、拡大されてスクリーンに映りますので、レンズ面には手をふれないでください。
また、本機を使用されないときは、レンズに添付のレンズキャップをかぶせておいてください。
・廃棄について
本体廃棄の際は、お買い上げの販売店にお問い合わせください。

■ランプ取り扱い上の注意

・プロジェクターの光源には、内部圧力の高いランプを使用しています。
ランプは、衝撃やキズ、使用時間の経過による劣化などにより、大きな音をともなって破裂したり、不点灯状態となることがあります。また、ランプが破裂や不点灯に至るまでの時間、条件には、ランプの個体差や使用条件によって差があり、本書に記してある指定の使用時間内であっても、破裂または不点灯状態に至ることがあります。
光源に使われているランプの決められた使用時間を超えると、液晶画面に「Bulb Over Time」と表示されます。このメッセージが表示された場合には、すみやかに販売店にランプ交換を依頼してください。
・ランプ破裂時には、ランプハウス内にガラスの破片が飛び散ったり、ランプ内部に含まれるキセノンガスがプロジェクターの通風孔から排出されることがあります。動作中は、排気口のそばに近付かないでください。キセノンガスは人体には無害ですが、破裂した場合は窓や扉をあけるなど十分に換気を行ってください。ガスを吸い込んだり、目に入ったりした場合には、こすったりせずに流水で洗い流し、すみやかに医師にご相談ください。
・プロジェクター内部の清掃、ランプの交換その他の修理については、必ず販売店に依頼し、お客様ご自身でプロジェクター内部の清掃、ランプ交換を行わないでください。

■AC電源を遮断する際の注意

以下のような場合は本体へのAC電源の供給を遮断しないでください。
機器が故障するおそれがあります。
・投写中
・ランプ消灯後のクーリング中（ファンの回転中は、POWERボタンLED（白）が点滅、液晶画面に「Cooling...」と表示されます。ファンは5分間回転します。）

1. 添付品の確認

添付品の内容をご確認ください。

□ プロジェクター本体（本機）（NC2000C）

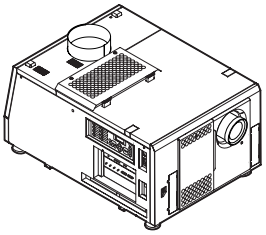

□ ランプ用アタッチメント1個

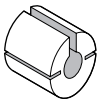

□ 排気口の保護シート 1枚

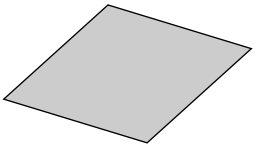

□ 排気口の保護シート用固定バンド 4本

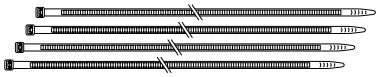

□ スモールアイリス 1個

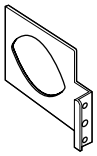

□ カバー用キー 2個

□ ランプドア用キー 2個

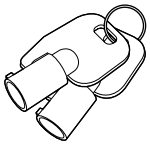

□ Important Information

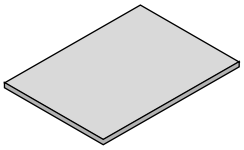

□ 保証書

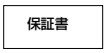

□ CD-ROM（取扱説明書）

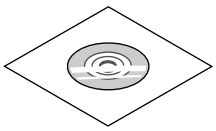

参考　万一添付品などが不足していたり破損している場合は、お買い上げの販売店にご連絡ください。添付品の外観が本書のイラストと多少異なる場合がありますが、実用上の支障はありません。

2. 故障かな？と思ったら

修理を依頼される前に、もう一度設定や操作に間違いがないかご確認ください。それでもなお異常なときはお買い上げの販売店にお問い合わせください。

現象と確認事項

このようなとき	確認してください
電源が入らない	本体へAC電源が供給されていますか。
	プロジェクター電源スイッチはON になっていますか。
	Panel Key Lock 中ではありませんか。Panel Key Lock 中は、本体の操作ボタンはロックされていて利きません。
	内部温度が高くなっていませんか。内部の温度が異常に高いと保護のため電源は入りません。しばらく待ってから電源を入れてください。
映像が出ない	接続している入力を選んでいますか。
	入力端子のケーブルが正しく接続されていますか。
	ダウザーが閉じていませんか。
	各設定が正しく調整･設定されていますか。
映像が歪む	正しく設置されていますか。
映像がぼやける	レンズのフォーカスは合っていますか。
	投写画面とプロジェクターが正しい角度で設置されていますか。
	投写距離がフォーカスの範囲を超えていませんか。
	レンズなどが結露していませんか。気温が低い所に保管しておいて温かい所で電源を入れるとレンズや内部の光学部が結露することがあります。このような場合は結露がなくなるまで数分お待ちください。
映像が乱れる	本機に接続している信号ケーブルが断線していませんか。
STATUSインジケータが赤色で点滅する	プロジェクターが故障している可能性があります。お買い上げの販売店にお問い合わせください。
エラーコードが表示された	お買い上げの販売店にお問い合わせください。

3. インジケータ表示一覧

本体操作部の4 つのボタン、本体後部にあるリアステータスインジケータが点灯、点滅しているときは、以下の説明を確認してください。また、本機には、ブザーによる警報機能もあります。

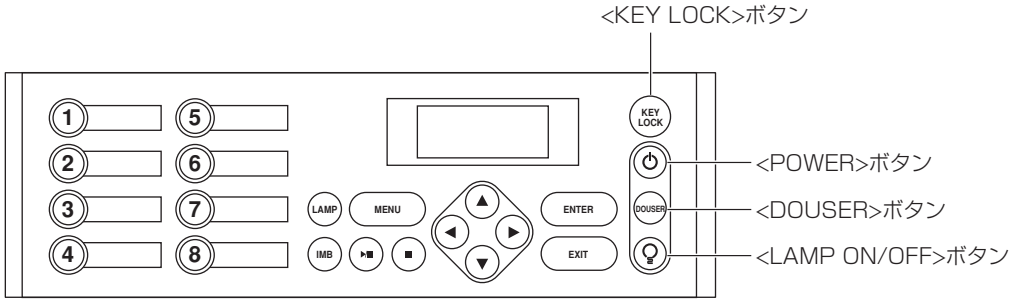

<KEY LOCK> ボタン

インジケータ表示		本機の状態	対　処
点灯	白色	KEY LOCK解除状態	−
	オレンジ色	KEY LOCK有効状態	−

<POWER> ボタン

インジケータ表示		本機の状態	対　処
消灯		プロジェクター電源OFF	−
点滅	緑色	電源ON準備中	しばらくお待ちください。
	白色	本体冷却中	しばらくお待ちください。
点灯	緑色	電源ON状態	−
	白色	スタンバイ状態	−

<DOUSER> ボタン

インジケータ表示		本機の状態	対　処
点滅	白色	ダウザーON	−
点灯	緑色	ダウザーOFF	−

<LAMP ON/OFF> ボタン

インジケータ表示		本機の状態	対　処
点滅	白色	ランプOFF	−
点灯	緑色	ランプON	−

リアステータスインジケータ

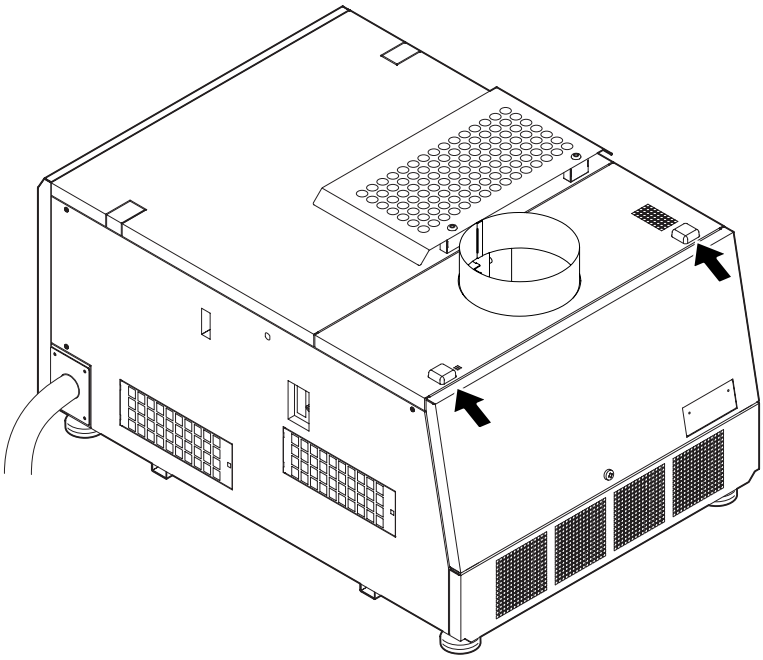

インジケータ表示		本機の状態	対　処
消灯		主電源OFF	−
点滅	緑色	電源ON準備中、ダウザーON、ランプOFF	しばらくお待ちください。
	オレンジ色	本体冷却中	しばらくお待ちください。
	赤色（ブザーあり）	安全性に問題がある異常あり	液晶画面にエラーメッセージが表示されます。エラー内容を確認してください。
	赤色（ブザーなし）	条件付きで映写可能な異常あり	
点灯	緑色	電源ON状態	−
	オレンジ色	スタンバイ状態	−
	赤色	映写に支障のないレベルの異常あり	液晶画面にエラーメッセージが表示されます。エラー内容を確認してください。

4. 仕様

型名	NC2000C	
投写方式	3チップDLP Cinema® 方式（0.98インチDC2Kチップ）	
パネル解像度	2048 x 1080	
ランプ	キセノンランプ 4kW（注1）	
スクリーンサイズ	5m～20m（幅）（設置条件による）	
コントラスト比	2200:1以上	
レンズ調整機能	電動レンズシフト（縦／横）、電動ズーム、電動フォーカス、ダウザー	
信号入力端子（注2）	スロットB	シグナルインプットボード（NC-80LB01）標準搭載 SDI (4) BNC （SMPTE 292M, 372M） RGB DIGITAL (2) DVI-D 24pin (TMDS specification)
	スロットA	工場出荷時　空き　（別売オプション搭載用）
外部コントロール	RS-232C D-sub 9 pin x 1 GPIOポートD-sub 37 pin x 1 外部制御機器接続用端子ステレオミニジャック x 1 3D CTL D-sub 15 pin x 1 USB Type A x 1 インターロック端子 x 1 EthernetポートG-bit RJ-45 x 1 Anamorphic Lens Turret制御端子 x 1	
電源	C1接続の場合（注3）	単相 AC 200V-240V 50/60Hz 30A （プロジェクター電源+ランプ電源）
	C2接続の場合（注3）	単相 AC 100V-240V 50/60Hz 5-2.5A（プロジェクター電源） 単相 AC 200V-240V 50/60Hz 27A（ランプ電源）
消費電力	5500W	
冷却方式	液冷システム･空冷システム（防塵フィルター付き）	
騒音レベル	62dB以下	
設置方式	デスク/ フロント、デスク/ リア	
質量	99kg（レンズを除く）	
外形寸法	700mm（幅）×990mm（奥行）×503mm（高さ）（突起部含まず、脚部含む）	
使用環境	動作温度:10℃～35℃ 動作湿度:10%～85%（ただし結露しないこと） 保存温度:-10℃～50℃ 保存湿度:10%～85%	
規格		<Safety> / <EMC>
	USA	UL60950-1 / FCC Class A
	Canada	CSA60950-1 / ICES-003 Class A
	Europe	EN60950-1 / EN55022 Class A EN55024
	Oceania	IEC60950-1 / AS/NZS CISPR.22 Class A
	Japan	J60950 / VCCI Class A
	Asia	IEC60950-1 / CISPR.22

（注 1）当社オプション品以外のランプを使用した場合は、当社オプション品に比べ輝度が低下します。
輝度重視の場合は、当社オプション品の使用を推奨します。
当社オプション品以外の取り付け可能なランプは、当社にて動作確認後、随時ホームページなどで公開します。
なお、当社のオプション品以外のランプを使用した場合の性能および信頼性に関する保証はいたしかねます。

（注 2）映像信号入力は、工場出荷時に実装している上記入力端子の他に別売オプションとしてImage Media BlockおよびMulti Media Switcher を準備しています。スロット A に実装することで多彩な入力インターフェースに対応します。

（注 3）C1 接続は、プロジェクター電源とランプ電源へ AC 電源を 1 本の電源ケーブルで供給する場合
C2 接続は、プロジェクター電源とランプ電源へ別々の電源ケーブルで AC 電源を供給する場合

※この仕様・意匠はお断りなく変更することがあります。

5. 保証と修理サービス(必ずお読みください)

保証書

この商品には、保証書を別途添付しております。
保証書は、必ず「お買い上げ日・販売店名」などの記入をお確かめのうえ、販売店から受け取っていただき内容をよくお読みのあと大切に保存してください。

●保証期間

本体:お買い上げ日から1年間です。
本体に付属のランプ:次の(1)と(2)の早いほうまでで、かつランプが点灯しない場合のみです。
(1) お買い上げ日から180日間。
(2) ランプ使用時間が500時間になるまで。

補修用性能部品の保有期間

当社は、このプロジェクターの補修用性能部品を製造打切後、5年保有しています。
性能部品とは、その製品の機能を維持するために必要な部品です。

ご不明な点や修理に関するご質問は

製品の故障、修理に関するご質問はお買い上げの販売店またはNECディスプレイソリューションズ株式会社にお願いいたします。

修理を依頼されるときは

「故障かな?と思ったら」(J-12ページ)に従って調べていただき、なお異常があるときは、電源を切り、必ず本体へのAC電源の供給を遮断器などで遮断して、お買い上げの販売店にご連絡ください。

●保証期間は

修理に際しましては保証書をご提示ください。
保証書の規定に従って販売店が修理させていただきます。

ご連絡していただきたい内容

品　　名	DLP Cinema® プロジェクター
形　　名	NC2000C
お買い上げ日	年　　月　　日
故障の状況	できるだけ具体的に
ご　住　所	付近の目印なども合わせてお知らせください
お　名　前	
電話番号	
訪問ご希望日	

べんり メモ	お買い上げ 店名	☎(　　)　　ー

●保証期間が過ぎているときは

修理すれば使用できる場合には、ご希望により有料で修理させていただきます。

修理料金の仕組み

・技術料
故障した製品を正常に修復するための料金です。
技術者の人件費、技術教育費、測定機器等設備費、一般管理費等が含まれています。
＋
・部品代
修理に使用した部品代金です。その他修理に付帯する部材などを含む場合もあります。
＋
・出張料
製品を引き取りする、製品のある場所へ技術者を派遣するための費用です。
別途、駐車料金をいただく場合があります。

輸出に関する注意事項

本製品の輸出（個人による携行を含む）については、日本国および外国の法に基づいて許可が必要となる場合があります。
必要な許可を取得せずに輸出すると同法により罰せられます。
輸出に際しての許可の要否については、NECディスプレイソリューションズ株式会社にお問い合わせください。

NECディスプレイソリューションズ株式会社
〒108-0023　東京都港区芝浦四丁目13番23号　MS芝浦ビル
TEL（03）5232-6148（ダイヤルイン）

NC2000C/NC2000C+ DLP Cinema Projector Important Information

NEC

Printed in China

Ver.2 02/10 (S)
7N8P9632

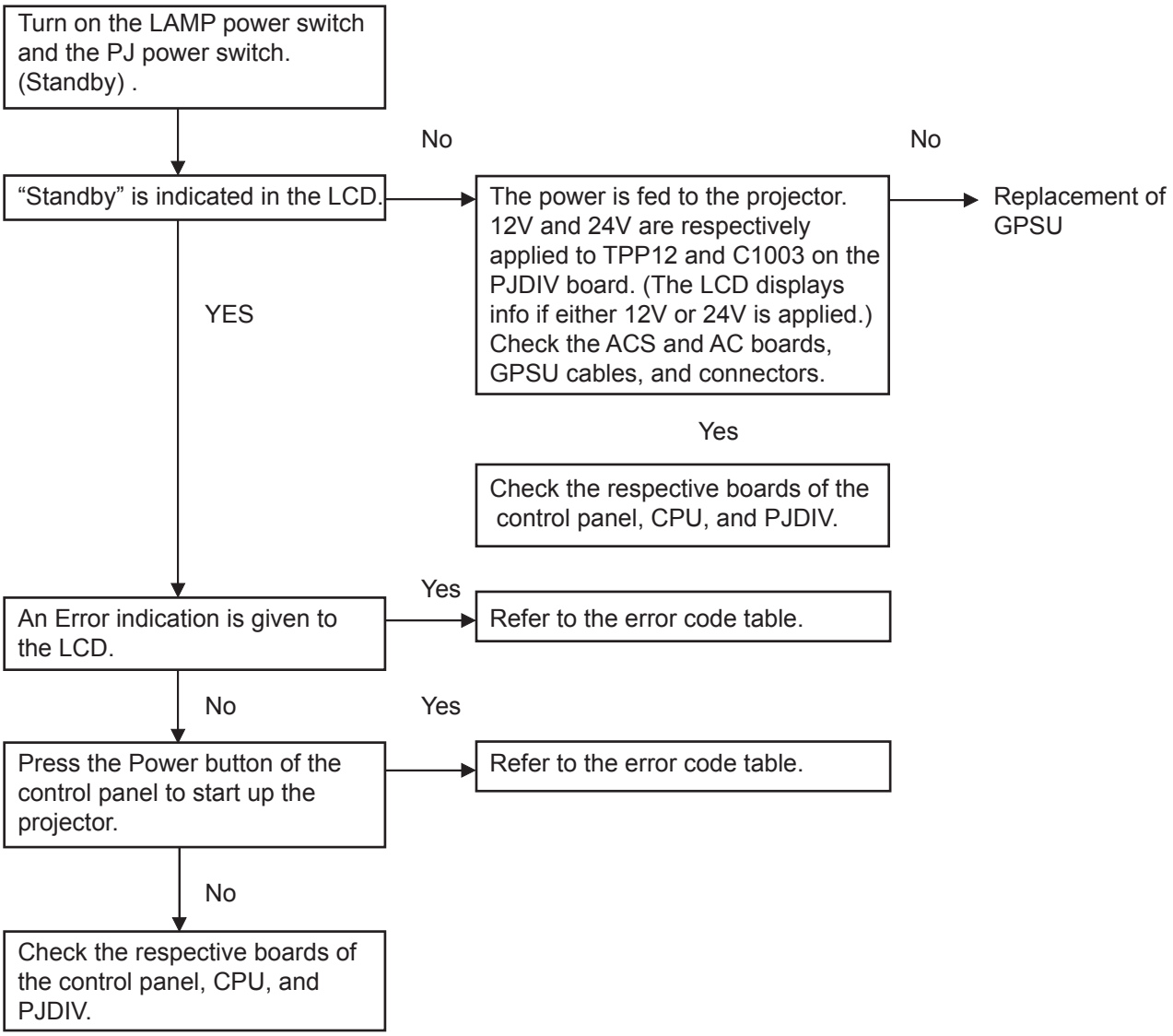

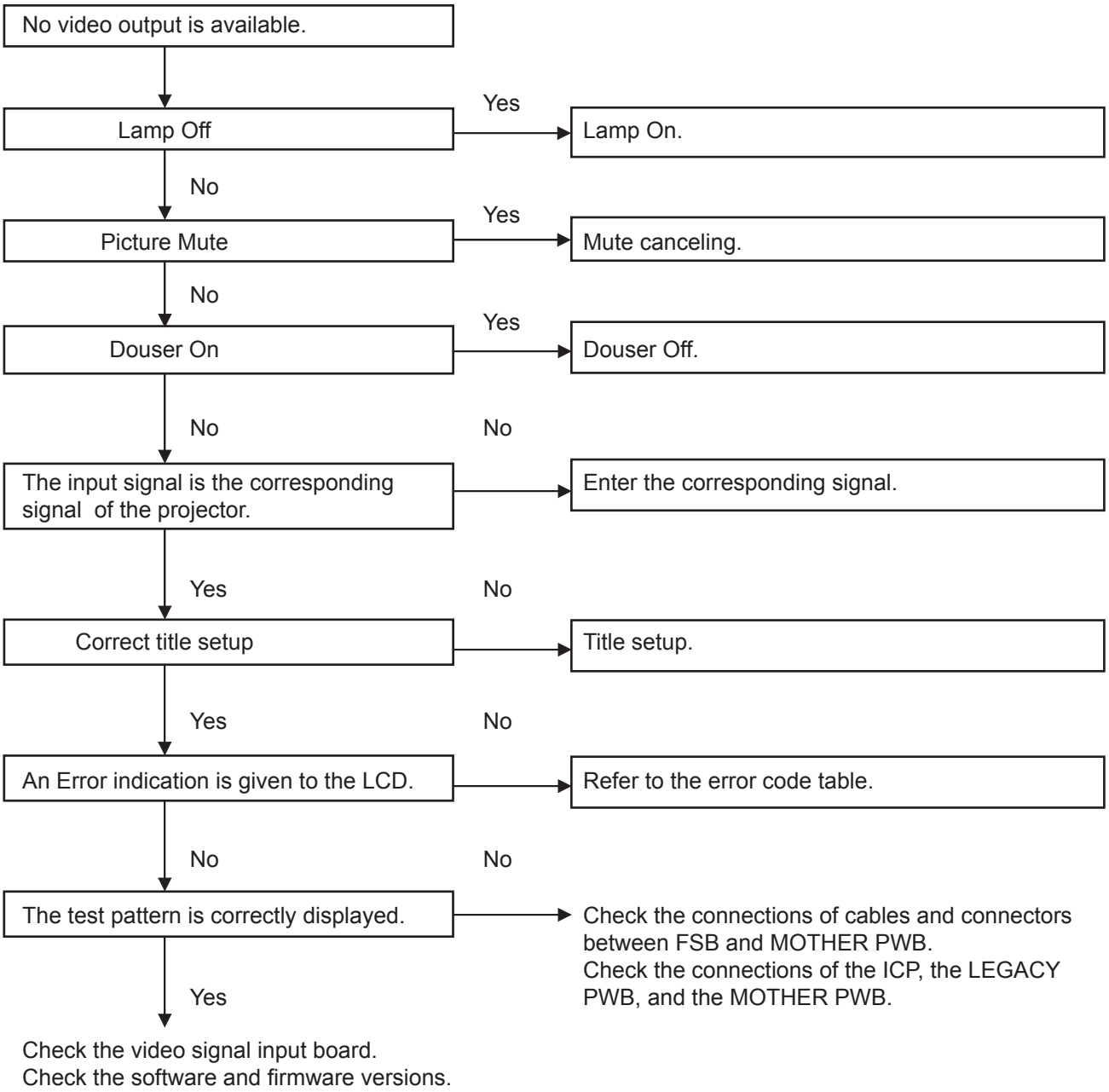

Error code	Error message	Description	Solution
1	Lamp Door Open	Lamp door (cover) is open.	Shut the lamp door. Check the fitting conditions, SW, PJDIV (POCN3), and cables. I2C (3.3V system) line of the CPU PWB
2	Lamp OverTemp.	Temperature (lamp temperature) is abnormal.	Check ambient temperature, suction air, and exhaust. I2C (3.3V system) line of the CPU PWB
4	GPSU(12V) Fail	Power supply is abnormal.	Check the output voltage of the power unit, cables, and PJDIV (POPSM). I2C (3.3V system) line of the CPU PWB
5	Lamp Unlit	Lamp doesn't light up.	Check the lamp power supply (cables) and the bulb. PJDIV (POCN2) serial line
6	House OverTime	Lamp house cumulative time is over.	Cumulative time is exceeded. Replace the lamp house.
8	LPSU OverTemp.	Temperature (lamp power inside temperature) is abnormal.	Check ambient temperature, suction air, and exhaust of the lamp house.
12	E2PROM R Fail(SYS:Param1 KEY:Param2 DIV:Param3)	E2PROM data read error is detected.	Check the respective boards (cables) of the CPU, PJDIV, and KEY I/O. The PJDIV and KEY I/O are controlled from the CPU through the I2C (5V system) line.
13	Interlock Fail	Interlock error is detected.	Check the respective boards and cables of the INTER, PEDE-A, and CPU. Displayed when it is open (no connections included).
15	E2PROM W Fail(SYS:Param1 KEY:Param2 DIV:Param3)	E2PROM data write error is detected.	Check the respective boards (cables) of the CPU, PJDIV, and KEY I/O. The PJDIV and KEY I/O are controlled from the CPU through the I2C (5V system) line.
17	Pump Stop(Param1)	Stopped for pump error.	Check the coolant of the reservoir tank, pump, PJDIV board (POCN5), and the CPU.
120	DLP Ack Fail(Param1, Param2)	Cinema board returns ACK error	Cables of ICP, CPU, ROUTER, and LAN
121	Lens Fail(Param1)(Param2, Param3)	Lens unit control error	Check the boards of PJDIV (POCN2) and MOTHER I/F as well as the LENS MOUNT.
123	Bulb OverTime	Lamp bulb cumulative time is over.	Cumulative time is exceeded. Replace the lamp bulb.
125	LPSU Fail(Param1)	Lamp power supply is abnormal.	Check the lamp power supply, cables, and the boards of PJDIV and PEDE-A.
128	OutRange(Param1, Param2, Param3, Pram4)	Adjusting lamp output value has set out of range.	Check the lamp output setup value. In case of any abnormality, replace the lamp. Check the PJDIV board (POCN2), PEDE-A board, and cables.
129	Down Lamp Power(Param1, Param2, Param3)	Down lamp power to decrease set inside temperature.	Check ambient temperature, suction air, and exhaust.
130	MMS Comm Fail(Param1:Param2:Param3)	MMS communication error is detected.	Refer to the MM Service Manual.
131	MMS Fan Stop	Built-in MMS fan has stopped.	
132	MMS Fail	Built-in MMS internal error.	
133	MM Reset (Command:Param1)		RS-232 I/F between CPU and ICP
140	DLP CommR Fail(Param1Param2Param3:Param4)	No communication with the cinema board.	
141	DLP CommE Fail(Param1Param2Param3:Param4)	No communication with the cinema board and DCC.	Ethernet I/F between CPU and ICP
145	SensorFail Outside Air(Param1)	Sensor (Out) read error.	Check the T-SEBSE board, cables, and the PJDIV board
146	SensorFail LPSU Intake(Param1)	Sensor (Inside Air) read error.	
147	SensorFail Exhaust(Param1)	Sensor (TI Chest) read error.	
148	SensorFail DMD-B(Param1)	Sensor (DMD) read error.	
150	Fan0 Stop(Param1)	Fan has stopped.	Check the corresponding fan (see layout), cables, and PJDIV.
151	Fan1 Stop(Param1)	Fan has stopped.	
152	Fan2 Stop(Param1)	Fan has stopped.	
153	Fan3 Stop(Param1)	Fan has stopped.	
154	Fan4 Stop(Param1)	Fan has stopped.	
155	Fan5 Stop(Param1)	Fan has stopped.	
156	Fan6 Stop(Param1)	Fan has stopped.	
157	Fan7 Stop(Param1)	Fan has stopped.	
158	Fan8 Stop(Param1)	Fan has stopped.	
159	Fan9 Stop(Param1)	Fan has stopped.	
160	GPSU Fan Stop	Fan has stopped.	Check the power unit, cables, PJDIV (POPSM), and the AC board.
162	Lamp Fan0 Stop(Param1)		Check the corresponding fan (see layout), cables, and PJDIV.
163	Lamp Fan1 Stop(Param1)		
164	ICP Fan Stop(Param1)		Check the CPU board and the fan of the same board.
165	GPI MACRO(n) Selection Invalid	Not selecting GPI MACRO while Metadata is enabled.	Indicate the control prohibition status (command).
166	GPI Control(Param1) Invalid	Cancel GPI control because the projector is in lamp on process.	Indicate the control prohibition status (command).
170	OverTemp.Outside Air(Param1)	Set inside temperature (Outside Air) is abnormal.	Check ambient temperature, suction air, and exhaust. Check the boards of PJDIV (POCN1) and T-SENSE as well as cables.
171	OverTemp.Precaution(Param1)	Set inside temperature (Inside Air) is close to over temperature.	Check ambient temperature, suction air, and exhaust. Check the boards of PJDIV (POCN1) and T-SENSE as well as cables.
172	OverTemp.Exhaust(Param1)	Set inside temperature (TI Chest) is abnormal.	Check ambient temperature, suction air, and exhaust. Check the boards of PJDIV (POCN1) and T-SENSE as well as cables.
173	OverTemp.DMD-B(Param1)	Set inside temperature (DMD) is abnormal.	Check ambient temperature, suction air, and exhaust. Check the boards of PJDIV (POCN1) and T-SENSE as well as cables.

Error code	Error message	Description	Solution
174	Bulb Entry	Not selecting a lamp bulb type.	Check lamp bulb entry.
177	Tamper Fail(Param1)		Examine the fixing method for the related installations. Check the TAMPER board and PJDIV (POCN2, POCN7) cables. Confirm positions
178	Marriage Tamper Fail(Param1)		Check the fitting conditions of the MOTHER board with the ICP and LEGACY boards and those of the ENIGMA board with LEGACY. Check SLOT-A cover mounting, the MOTHER board (PO6012), TAMPER board, SW, and cables.
180	CPU Fail(Mem) Param1: Param2<->Param3	System Memory Test Failed.	Check the CPU board (IC7000, IC7007)
187	GPSU(24V) Fail		Check the output voltage of the power unit, cables, and PJDIV (POPSM).
201	Error Log Write Fail		
210	Unknown LPSU Model(Param1)		Check the lamp power supply, PEDE-A, PJDIV (POCN2), and cables.
211	LPSU Fan Stop		Check the lamp power supply, PEDE-A, PJDIV (POCN2), and cables.
213	12V Outside range(Param1)		Check the output voltage of the power unit, cables, and MOTHER (PO6010).
214	24V Outside range(Param1)		Check the output voltage of the power unit, cables, and PJDIV (POP24).
215	Lamp Filter Time Over(Param1)		Cumulative time exceeded.
216	Body Filter Time Over(Param1)		Cumulative time exceeded.
220	AC On Fan Exchange Time		
221	Power On Fan Exchange Time		
222	Lamp Fan Exchange Time		
230	Router Fail(Param1)		Check the router (including power supply), LAN cables, and the CPU.
231	SensorFail Opt		Check LSENS, PJDIV (POCN3), and cables.
232	MAC Write Fail		Check the CPU (IC7101, IC7103). This description is not disclosed for the shipped sets because it was already written.
233	Illegal MAC Address		Replace the router.
240	SIB Comm Fail(Param1Pram2Param3Param4)		Check LAN cables between the router and MOTHER (PO6201) and the fitting conditions around the LEGACY (IC1600, IC1604) and MOTHER boards.
241	SIB Error(Param1)		Check the LEGACY board.
242	SIB FPGA Reboot		Status
250	Fan0 Stop Precaution(Param1)		Prepare for the replacement of the related fan.
251	Fan1 Stop Precaution(Param1)		
252	Fan2 Stop Precaution(Param1)		
253	Fan3 Stop Precaution(Param1)		
254	Fan4 Stop Precaution(Param1)		
255	Fan5 Stop Precaution(Param1)		
256	Fan6 Stop Precaution(Param1)		
257	Fan7 Stop Precaution(Param1)		
258	Fan8 Stop Precaution(Param1)		
259	Fan9 Stop Precaution(Param1)		
260	Lamp Fan0 Stop Precaution(Param1)		
261	Lamp Fan1 Stop Precaution(Param1)		
262	Pump Stop Precaution(Param1)		
263	ICP Fan Stop Precaution(Param1)		
270	SD Tamper Terminate(Param1)		Check the Tamper switch.
302	Self Test Error	Cinema board error	Check the ICP (including the S/W, F/W versions).
303	Install Release Package Error	Cinema board error	
304	Load Release Package Error	Cinema board error	
305	Key Error	Cinema board error	
306	Certificate Error	Cinema board error	
317	ICP Normal Configuration Error	Cinema board error	
318	ICP Boot Configuration Error	Cinema board error	
319	FMT Normal Configuration Error	Cinema board error	
320	FMT Boot Configuration Error	Cinema board error	
321	FMT Satellite Configuration Error	Cinema board error	
322	1.20V Supply out of range	Cinema board error	
323	1.80V Supply out of range	Cinema board error	
324	2.50V Supply out of range	Cinema board error	
325	3.30V Regulator out of range	Cinema board error	
326	ICP FPGA Temperature out of range	Cinema board error	
327	FMT FPGA Temperature out of range	Cinema board error	
328	ICP Flash Update Error	Cinema board error	
329	FMT Sequence Data File Mismatch	Cinema board error	
330	FMT DMD Data File Mismatch	Cinema board error	
331	FMT Flash Checksum Error - Sequence Data	Cinema board error	
332	FMT Flash Checksum Error - DMD Data	Cinema board error	
333	Satellite Hardware Mismatch	Cinema board error	
334	FMT Flash Update Error	Cinema board error	

Error code	Error message	Description	Solution
335	Red Satellite Reports Reset	Cinema board error	Check cables between the FSB and MOTHER boards.
336	Red Satellite Serial Link Error	Cinema board error	
337	Red Satellite Firmware Configuration Error	Cinema board error	
338	Red DAD1000 Bias Under Voltage Error	Cinema board error	
339	Red DAD1000 Reset Under Voltage Error	Cinema board error	
340	Red DAD1000 Offset Under Voltage Error	Cinema board error	
341	Red DAD1000 Thermal Shutdown Error	Cinema board error	
342	Green Satellite Reports Reset	Cinema board error	
343	Green Satellite Serial Link Error	Cinema board error	
344	Green Satellite Firmware Configuration Error	Cinema board error	
345	Green DAD1000 Bias Under Voltage Error	Cinema board error	
346	Green DAD1000 Reset Under Voltage Error	Cinema board error	
347	Green DAD1000 Offset Under Voltage Error	Cinema board error	
348	Green DAD1000 Thermal Shutdown Error	Cinema board error	
349	Blue Satellite Reports Reset	Cinema board error	
350	Blue Satellite Serial Link Error	Cinema board error	
351	Blue Satellite Firmware Configuration Error	Cinema board error	
352	Blue DAD1000 Bias Under Voltage Error	Cinema board error	
353	Blue DAD1000 Reset Under Voltage Error	Cinema board error	
354	Blue DAD1000 Offset Under Voltage Error	Cinema board error	
355	Blue DAD1000 Thermal Shutdown Error	Cinema board error	
356	RTC Error	Cinema board error	Check the ICP.
400	Enigma Comm Fail(Param1Param2Param3:Param4)	Enigma	Check connections to the LEGACY board and also the LAN I/F, F/W versions.
410	System Error	Enigma Status error	
411	Self Test Error	Enigma Status error	
412	Install Release Package Error	Enigma Status error	
413	Load Release Package Error	Enigma Status error	
414	TI Login List Package Error	Enigma Status error	
415	Security Officer Login List Package Error	Enigma Status error	
419	Certificate or Key Error	Enigma Status error	
426	User Loader Integrity Error	Enigma Status error	
427	Main Application Integrity Error	Enigma Status error	
428	RNG Hardware Integrity Error	Enigma Status error	
429	DRNG Algorithm Integrity Error	Enigma Status error	
430	RSA Algorithm Integrity Error	Enigma Status error	
431	AES Algorithm Integrity Error	Enigma Status error	
432	HMAC Algorithm Integrity Error	Enigma Status error	
433	SHA Algorithm Integrity Error	Enigma Status error	
434	TLS Integrity Error	Enigma Status error	
435	FPGA Configuration Integrity Error	Enigma Status error	
436	FPGA CineLink 2 Decryption Integrity Error	Enigma Status error	
437	RTC Error	Enigma Status error	
442	FPGA Configuration Error	Enigma Status error	
443	FPGA Temperature out of range	Enigma Status error	
446	RNG Hardware Duplicate Output Error	Enigma Status error	
447	DRNG Algorithm Duplicate Output Error	Enigma Status error	
450	1.20V Supply out of range	Enigma Status error	
451	1.80V Supply out of range	Enigma Status error	
452	2.50V Supply out of range	Enigma Status error	
453	3.30V Regulator out of range	Enigma Status error	
458	SelfTest User Loader Integrity Error	Enigma Status error	
459	SelfTest Main Application Integrity Error	Enigma Status error	
460	SelfTest RNG Hardware Integrity Error	Enigma Status error	
461	SelfTest DRNG Algorithm Integrity Error	Enigma Status error	
462	SelfTest RSA Algorithm Integrity Error	Enigma Status error	
463	SelfTest AES Algorithm Integrity Error	Enigma Status error	
464	SelfTest HMAC Algorithm Integrity Error	Enigma Status error	
465	SelfTest SHA Algorithm Integrity Error	Enigma Status error	
466	SelfTest TLS Integrity Error	Enigma Status error	
467	SelfTest FPGA Configuration Integrity Error	Enigma Status error	
468	SelfTest FPGA CineLink. 2 Decryption Integrity Error	Enigma Status error	
474	Security Tamper	Enigma Status error	
475	Top Side Security Enclosure Open	Enigma Status error	
476	Bottom Side Security Enclosure Open	Enigma Status error	
477	Security Battery Event	Enigma Status error	
478	Software Commanded Zeroization	Enigma Status error	
481	Security Enclosure Not Armed	Enigma Status error	
482	Physical Marriage Tamper	Enigma Status error	
483	Logical Marriage Tamper	Enigma Status error	
484	Marriage NOT Active	Enigma Status error	
486	Service Door Tamper	Enigma Status error	
487	Security Log Error	Enigma Status error	
488	Security Battery Low Warning	Enigma Status error	
489	Security Log Warning	Enigma Status error	

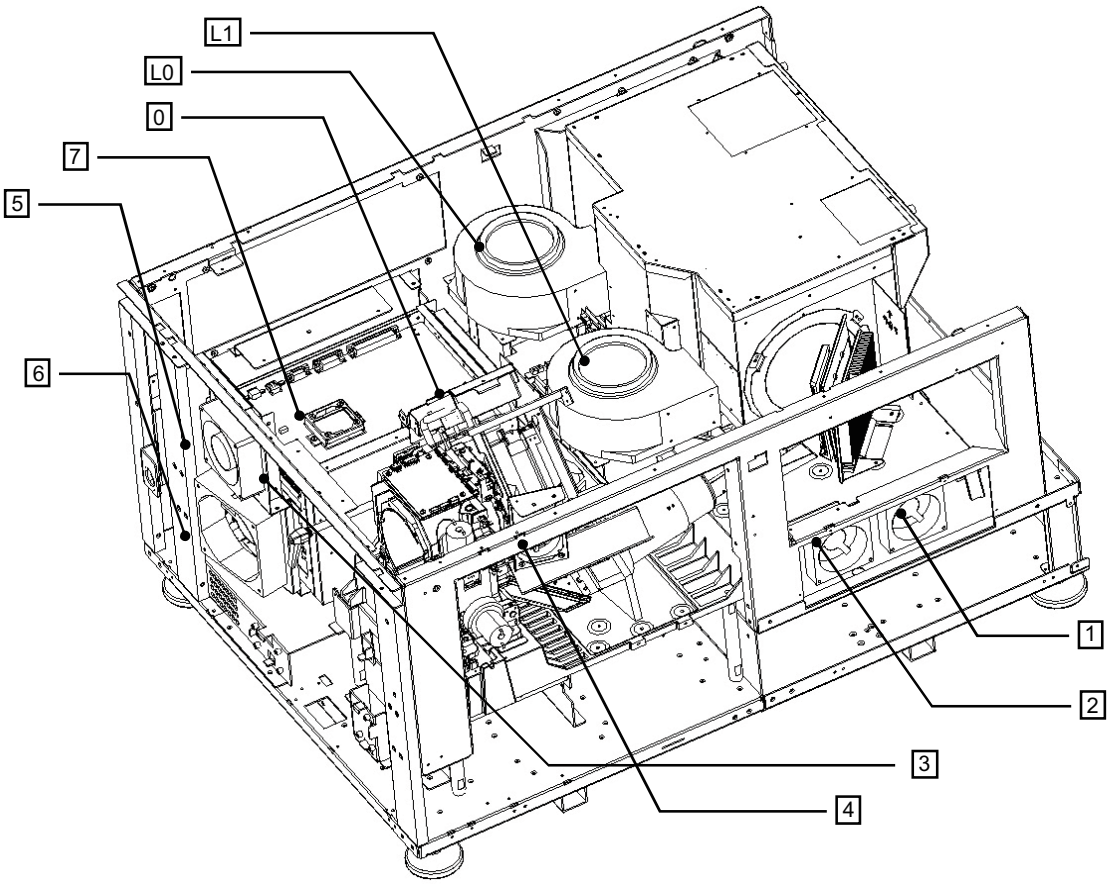

FAN No.	FAN Name	Locations	Type
FAN0	Top prism	Upper part of the prism	9G0824G105
FAN1	Cold mirror	Cold mirror	9G0824G105
FAN2	Opt tube	OPT tube	9G0824G105
FAN3	Bottom prism	Lower part of the prism	4715KL-05W-B49-P54
FAN4	Blue FMB	Blue FMB	2406KL-05W-B59-L54
FAN5	Front top	Front top	3610KL-05W-B69-B53
FAN6	Front bottom	Front bottom	4715KL-05W-B49-P54
FAN7	ICP	On the CPU board	2004KL-04W-B59-B5A
Lamp FAN 0	Lamp Fan 0	Outside of the set	F0628-U12C
Lamp FAN 1	Lamp Fan 1	Inside of the set	F0628-U12C

LCD display in the state of cables pulled out and Standby / Power ON

PWB / PARTS		Connector name	#	AC ON（Standby）			Power ON			Error Message (Log)	Remarks	Connector name
				LCD	Buzzer	LED	LCD	Buzzer	LED			
ROUTER		WAN		-	-	-	-	-	-		DCC connection is disabled.	
	PJDIV POCN6	DC IN		Router Fail(Connect)	-	R	Router Fail(Connect) SIB Comm Fail(Connect) Enigma Comm Fail(00000:Con=2) DLP CommE Fail(00000:Con=2)	-	R	230 : Router Fail(Connect) 240 : SIB Comm Fail(Connect) 400 : Enigma Comm Fail(00000:Con=2) 141 : DLP CommE Fail(00000:Con=2)	DCC connection is disabled.	DCC connection is disabled. / In the case of a failure in DLP CommE, no display is presented shortly after the power is ON. Failure in the router may occur after the lapse of a certain time.
	OPTION	PO6202 LAN		-	-	-	-	-	-		SlotA setting is (MMS) when the power is ON.	
	LEGACY	PO620 1 LAN		-	-	-	SIB Comm Fail(Connect) Enigma Comm Fail(00000:Con=2)	-	R	240 : SIB Comm Fail(Connect) 400 : Enigma Comm Fail(00000:Con=2)	SlotB setting is (SIB) when the power is ON.	
	ICP	PO6200 LAN		-	-	-	DLP CommE Fail(00000:Con=2)	-	R	141 : DLP CommE Fail(00000:Con=2)		In the case of a failure in DLP CommE, no display is presented shortly after the power is ON.
	CPU	PO6203 LAN		Router Fail(Connect)	-	R	Router Fail(Connect) SIB Comm Fail(Connect) Enigma Comm Fail(00000:Con=2) DLP CommE Fail(00000:Con=2)	-	R	230 : Router Fail(Connect) 240 : SIB Comm Fail(Connect) 400 : Enigma Comm Fail(00000:Con=2) 141 : DLP CommE Fail(00000:Con=2)	DCC connection is disabled.	In the case of a failure in DLP CommE, no display is presented shortly after the power is ON. Failure in the router may occur after the lapse of a certain time.
PJDIV	POCN6	FAN	3	Fan6 Stop	O	R	X	X	R	156 : Fan6 Stop		
		FAN	3	-	-	-	Fan5 Stop	O	R	155 : Fan5 Stop	An error occurs in the middle of power ON.	
TURRET		TURRET	2	-	-	-	-	-	-	-	The Anamo jig does not operate yet.	
PJDIV		POCN6	16	Fan6 Stop Router Fail(Connect)	O	R	X	X	R	156 : Fan6 Stop 230 : Router Fail(Connect)	DCC connection is disabled.	Failure in the router may occur after the lapse of a certain time.
LIGHT	KEY I/O POL1	POL11	2	-	-	-	-	-	-	-	The white LED is not lit at the control panel top.	
KEY I/O	LCD	POLC	16	X	-	-	X	-	-	-	No LCD display	
	Control panel	PO1000	20	-	-	-	- * at DCC	-	-	-	The Key LED is not lit at the control panel.	
	PJDIV POIF	POIF	40	X	-	-	-	-	X	-	The white LED is not lit at the control panel top. No LCD display The Key LED is not lit at the control panel. The first buzzer sound is delayed.	
AC		POAC0	2	X	X	X	X	X	X	X	The power is not ON.	
		POAC1	3	GPSU Fan Stop	O	R	GPSU Fan Stop	O	R	160 : GPSU Fan Stop	An error occurs in the middle of power ON.	At the time of C1 connection
ACS		POACS0	2	X	X	X	X	X	X	X	The power is not ON.	
		POACS2	3	-	-	-	-	-	-	-		
		POACS1	2	X	X	X	X	X	X	X	The power is not ON.	
MOTHER	GPSU	PO6010	6	12V Outside range GPSU(12V) Fail	O	R	X	X	R	213 : 12V Outside range(0.51V) 4 : GPSU(12V) Fail	DCC connection is disabled.	
PJDIV		POPSM	8	12V Outside range(0.35V) GPSU Fan Stop GPSU(24V) Fail	O	R	X	X	R	213 : 12V Outside range(0.35V) 160 : GPSU Fan Stop 187 : GPSU(24V) Fail	DCC connection is disabled.	
		POP24	6	Fan6 Stop 24V Outside range	O	R	X	X	R	156 : Fan6 Stop 214 : 24V Outside range		
PEDE-A	LPS	POLPS	12	LPSU Fail(No Lamp)	O	R	LPSU Fail(No Lamp)	O	R	125 : LPSU Fail(No Lamp)	The power is not ON.	
	INTER	POIL	4	Interlock Fail	O	R	X	X	R	13 : Interlock Fail		
	PJDIV POCN2	POCI	8	LPSU Fail(No Lamp)	O	R	LPSU Fail(No Lamp)	O	R	125 : LPSU Fail(No Lamp)	The power is not ON.	
MOTER I/F	PJDIV POCN2	J100	8	-	-	-	Lens Fail(Comm Timeout)(04H, 00H)	-	R	121 : Lens Fail(Comm Timeout)(05H, 00H) 121 : Lens Fail(Restart)		
		J102	5	-	-	-	Lens Fail(H-Sensor Read Fail)	-	R	121 : Lens Fail(H-Sensor Read Fail)(05H, 00H)	A warning is given when lens control is intended.	
		J103	6	-	-	-	Lens Fail(V-Sensor Read Fail)(02H, FFFFFFFFH)	-	R	121 : Lens Fail(V-Sensor Read Fail)(02H, FFFFFFFFH)	A warning is given when lens control is intended.	
		J200	4	-	-	-	-	-	-	-	The upper/lower shift does not work	
		J201	5	-	-	-	-	-	-	-	The right/left shift does not work.	
		J204	3	-	-	-	-	-	-	-	Zoom does not function.	
		J205	9	-	-	-	-	-	-	-	Zoom and Focus almost do not function.	
		J207	2	-	-	-	-	-	-	-	Focus does not function.	
		J203	6	-	-	-	-	-	-	-	Douser does not work. (Display changes on the control panel.)	
TAMPER	4715BA	POT5	3	Tamper Fail(2)	-	R	Tamper Fail(2)	-	R	177 : Tamper Fail(2)		
TAMPER	4715BB	POT5	3	Tamper Fail(3)	-	R	Tamper Fail(3)	-	R	177 : Tamper Fail(3)		
PJDIV		POCN2	22	LPSU Fail(No Lamp) Tamper Fail(2,3)	O	R	LPSU Fail(No Lamp) Lens Fail(Comm Timeout) Tamper Fail(2,3)	O	R	125 : LPSU Fail(No Lamp) 121 : Lens Fail(Comm Timeout)(04H, 00H) 177 : Tamper Fail(2,3)		
TAMPER	4715AD	POTS5	3	Marriage Tamper Fail(1)	-	R	Marriage Tamper Fail(1)	-	R	178 : Marriage Tamper Fail(1)		
TAMPER	4715AE	POTS5	3	Marriage Tamper Fail(0)	-	R	Marriage Tamper Fail(0)	-	R	178 : Marriage Tamper Fail(0)		
MOTHER	TAMPER*2	PO6012	6	Marriage Tamper Fail(0,1)	-	R	Marriage Tamper Fail(0,1)	-	R	178 : Marriage Tamper Fail(0,1)		
PJDIV		POLFP	4	-	-	-	Lamp Fan1 Stop Lamp Fan0 Stop	O	R	163 : Lamp Fan1 Stop(HW Prt) 162 : Lamp Fan0 Stop(HW Prt)	Shutdown occurs in the middle of Power ON.	
FAN Driver PWB A	PJDIV POLFP	CN1	2	-	-	-	Lamp Fan0 Stop	O	R	162 : Lamp Fan0 Stop(HW Prt)	Shutdown occurs in the middle of Power ON.	
	PJDIV POCN7	CN2	11	-	-	-	Lamp Fan0 Stop	O	R	162 : Lamp Fan0 Stop(HW Prt)	Shutdown occurs in the middle of Power ON.	
		CN3	8	-	-	-	Lamp Fan0 Stop	O	R	162 : Lamp Fan0 Stop(HW Prt)	Shutdown occurs in the middle of Power ON.	
FAN Driver PWB B	PJDIV POLFP	CN1	2	-	-	-	Lamp Fan1 Stop	O	R	163 : Lamp Fan1 Stop(HW Prt)	Shutdown occurs in the middle of Power ON.	
	PJDIV POCN7	CN2	11	-	-	-	Lamp Fan1 Stop	O	R	163 : Lamp Fan1 Stop(HW Prt)	Shutdown occurs in the middle of Power ON.	
		CN3	8	-	-	-	Lamp Fan1 Stop	O	R	163 : Lamp Fan1 Stop(HW Prt)	Shutdown occurs in the middle of Power ON.	

PWB / PARTS		Connector name	#	AC ON（Standby）			Power ON			Error Message (Log)	Remarks	Connector name
				LCD	Buzzer	LED	LCD	Buzzer	LED			
TSENS		POTE31	3	-	-	-	-	-	-	-	An error indication of Temp2 is presented in the status screen of DCC.	
TAPER		POT5	3	Tamper Fail(0)	-	R	Tamper Fail(0)	-	R	177 : Tamper Fail(0)		
TSENS	PJDIV POCN7	MM	3	SensorFail LPSU Intake(Set)	-	R	SensorFail LPSU Intake(Set)	-	R	146 : SensorFail LPSU Intake(Set)	A warning is given in standby mode when the status is left unchanged for 10 minutes. An error indication of LPSU Intake is presented in the status screen of DCC.	
PJDIV		POCN1	30	SensorFail Outside Air(Set) SensorFail Exhaust(Set) SensorFail DMD-B(Set)	-	R	SensorFail Outside Air(Set) SensorFail Exhaust(Set) SensorFail DMD-B(Set)	-	R	145 : SensorFail Outside Air(Set) 147 : SensorFail Exhaust(Set) 148 : SensorFail DMD-B(Set)	Error indications of Outside Air, DMD-B, Exhaust, Temp6, Temp7, Temp8 are presented in the status screen of DCC.	
TSENS	Water cold	POTE21	3	-	-	-	-	-	-	-	An error indication of Temp8 is presented in the status screen of DCC.	
TSENS	Circuit Box	POTE41	3	-	-	-	-	-	-	-	An error indication of Temp7 is presented in the status screen of DCC.	
TSENS	Cold mirror	POTE71	3	-	-	-	-	-	-	-	An error indication of Temp6 is presented in the status screen of DCC.	
TSENS	Exhaust Duct	POTE41	3	SensorFail Exhaust(Set)	-	R	SensorFail Exhaust(Set)	-	R	147 : SensorFail Exhaust(Set)	A warning is given in standby mode when the status is left unchanged for 10 minutes. A display of Exhaust is presented in the status screen of DCC.	
TSENS	DMD-B	POTE51	3	SensorFail DMD-B(Set)	-	R	SensorFail DMD-B(Set)	-	R	148 : SensorFail DMD-B(Set)	A warning is given in standby mode when the status is left unchanged for 10 minutes. A display of DMD-B is presented in the status screen of DCC.	
TSENS	Outside Air	POTE81	3	SensorFail Outside Air(Set)	-	R	SensorFail Outside Air(Set)	-	R	145 : SensorFail Outside Air(Set)	A warning is given in standby mode when the status is left unchanged for 10 minutes. A display of Outside Air is presented in the status screen of DCC.	
PJDIV		POCN3	16	Lamp Door Open	X	X	X	X	X	1 : Lamp Door Open		
SLED-A	PJDIV POCN3	POST	5	-	X	X	-	X	X	-		
	SLED-B	POST1	3	-	-	△	-	-	△	-	LEDs on the control panel side only are unlit.	
LSENS		POPY	3	-	-	-	-	-	-	-	Bulb Alignment is fixed at 0 even in the state of Lamp ON.	
COVER		POCO	2	Lamp Door Open	O	R	X	O	R	1 : Lamp Door Open		
PJDIV		POCN5	20	Lamp OverTemp.	O	R	X	O	R	2 : Lamp OverTemp.		
	Rod	FAN	3	-	-	-	Fan1 Stop	O	R	151 : Fan1 Stop	Shutdown occurs in the middle of Power ON.	
	FSB B-ch	FAN	3	-	-	-	Fan4 Stop	O	R	154 : Fan4 Stop	Shutdown occurs in the middle of Power ON.	
	Cold Mirror	FAN	3	-	-	-	Fan2 Stop	O	R	152 : Fan2 Stop	Shutdown occurs in the middle of Power ON.	
	Prism Top	FAN	3	-	-	-	Fan0 Stop	O	R	150 : Fan0 Stop	Shutdown occurs in the middle of Power ON.	
	Prism Under	FAN	3	-	-	-	Fan3 Stop	O	R	153 : Fan3 Stop	Shutdown occurs in the middle of Power ON.	
		PUMP	3	-	-	-	Pump Stop	O	R	17 : Pump Stop	Shutdown occurs in the middle of Power ON.	
		Thermostud	2	Lamp OverTemp.	O	R	X	O	R	2 : Lamp OverTemp.		
FSB Blue	I N T E R V E N E PO6204	J1	30	-	-	-	System Error Self Test Error Satellite Hardware Mismatch Blue Satellite Serial Link Error Blue Satellite Firmware Configuration Error	-	R	301 : System Error 302 : Self Test Error 333 : Satellite Hardware Mismatch 350 : Blue Satellite Serial Link Error 351 : Blue Satellite Firmware Configuration Error	ICP Status Self Test Results ICP Data Path Signature Test Result: FAIL	
	I N T E R V E N E PO6205	J2	30	-	-	-				301 : System Error 302 : Self Test Error 333 : Satellite Hardware Mismatch 350 : Blue Satellite Serial Link Error 351 : Blue Satellite Firmware Configuration Error	ICP Status Self Test Results ICP Data Path Signature Test Result: FAIL	The FSB Blue LED is lit.
	power	J3	30	-	-	-				301 : System Error 302 : Self Test Error 333 : Satellite Hardware Mismatch 350 : Blue Satellite Serial Link Erro 351 : Blue Satellite Firmware Configuration Error	ICP Status Self Test Results ICP Data Path Signature Test Result: FAIL	
FSB Green	I N T E R V E N E PO6202	J1	30	-	-	-	System Error Self Test Error Satellite Hardware Mismatch Green Satellite Serial Link Error Green Satellite Firmware Configuration Error	-	R	301 : System Error 302 : Self Test Error 333 : Satellite Hardware Mismatch 343 : Green Satellite Serial Link Error 344 : Green Satellite Firmware Configuration Error	ICP Status Self Test Results ICP Data Path Signature Test Result: FAIL	
	I N T E R V E N E PO6203	J2	30	-	-	-				301 : System Error 302 : Self Test Error 333 : Satellite Hardware Mismatch 343 : Green Satellite Serial Link Error 344 : Green Satellite Firmware Configuration Error	ICP Status Self Test Results ICP Data Path Signature Test Result: FAIL	The FSB Green LED is lit.
	power	J3	30	-	-	-				301 : System Error 302 : Self Test Error 333 : Satellite Hardware Mismatch 343 : Green Satellite Serial Link Error 344 : Green Satellite Firmware Configuration Error	ICP Status Self Test Results ICP Data Path Signature Test Result: FAIL	

PWB / PARTS		Connector name	#	AC ON（Standby）			Power ON			Error Message (Log)	Remarks	Connector name
				LCD	Buzzer	LED	LCD	Buzzer	LED			
FSB Red	INTERVENE PO6200	J1	30	-	-	-	System Error Self Test Error Satellite Hardware Mismatch Red Satellite Serial Link Error Red Satellite Firmware Configuration Error	-	R	301 : System Error 302 : Self Test Error 333 : Satellite Hardware Mismatch 336 : Red Satellite Serial Link Error 337 : Red Satellite Firmware Configuration Error	ICP Status Self Test Results ICP Data Path Signature Test Result: FAIL	
	INTERVENE PO6201	J2	30	-	-	-				301 : System Error 302 : Self Test Error 333 : Satellite Hardware Mismatch 336 : Red Satellite Serial Link Error 337 : Red Satellite Firmware Configuration Error	ICP Status Self Test Results ICP Data Path Signature Test Result: FAIL	The FSB Red LED is lit.
	power	J3	30	-	-	-				301 : System Error 302 : Self Test Error 333 : Satellite Hardware Mismatch 336 : Red Satellite Serial Link Error 337 : Red Satellite Firmware Configuration Error	ICP Status Self Test Results ICP Data Path Signature Test Result: FAIL	
MOTHER@ICP		PO6200	24				System Error Self Test Error FMT Satellite Configuration Error Red Satellite Serial Link Error Red Satellite Firmware Configuration Error Green Satellite Serial Link Error Green Satellite Firmware Configuration Error Blue Satellite Serial Link Error Blue	-	R	301 : System Error 302 : Self Test Error 321 : FMT Satellite Configuration Error 336 : Red Satellite Serial Link Error 337 : Red Satellite Firmware Configuration Error 343 : Green Satellite Serial Link Error 344 : Green Satellite Firmware Configuration Error	ICP Data Path Signature Test Result: FAIL ICP Frame Memory Test Result: FAIL	
INTERVENE	FSB*3			-	-	-		-	R	301 : System Error 302 : Self Test Error 321 : FMT Satellite Configuration Error 336 : Red Satellite Serial Link Error 337 : Red Satellite Firmware Configuration Error 343 : Green Satellite Serial Link Error 344 : Green Satellite Firmware Configuration Error	ICP Data Path Signature Test Result: FAIL ICP Frame Memory Test Result: FAIL	

LED Identifier	Short Description	Full Description
PWR		Indicates the presence of the internal regulator enable signal. This signal enables the following regulators: ICP 3.3VDC, 2.5VDC, 1.8VDC, and 1.2VDC Satellites 3.3VDC and 2.5VDC USB 5.0VDC Off = Internal regulators not enabled Blue = Internal regulators enabled
SOFT	Software State	Indicates the state of the software application. Off = FAIL (State 0) Red = FAIL (State 1) Yellow = FAIL (State 2) Green = OK
OS	Operating System State	Indicates the state of the Operating System. Off = FAIL (State 0) Red = FAIL (State 1) Yellow = FAIL (State 2) Green = OK
FMT	FMT FPGA State	Indicates the configured state of the FMT FPGA. Off = N/A Red = Unable to configure FPGA with Main or Boot application Yellow = Boot Application Green = Main Application
ICPS	ICP FPGA State	Indicates the configured state of the ICP FPGA. Off = N/A Red = Unable to configure FPGA with Main or Boot application Yellow = Boot Application Green = Main Application
PORT A	Status of Port A	Indicates the status of ICP input port A. Off = No Source Present Red = TBD Yellow = TBD Green = Active Source Present
PORT B	Status of Port B	Indicates the status of ICP input port B. Off = No Source Present Red = TBD Yellow = TBD Green = Active Source Present

Contents

I. Application

DLP Cinema Projector NC2000C

The projector interior contains an AC primary live section and a high voltage section. If you have to access the equipment interior, utmost care is needed.

II. Standard adjustment conditions

1. Installation condition

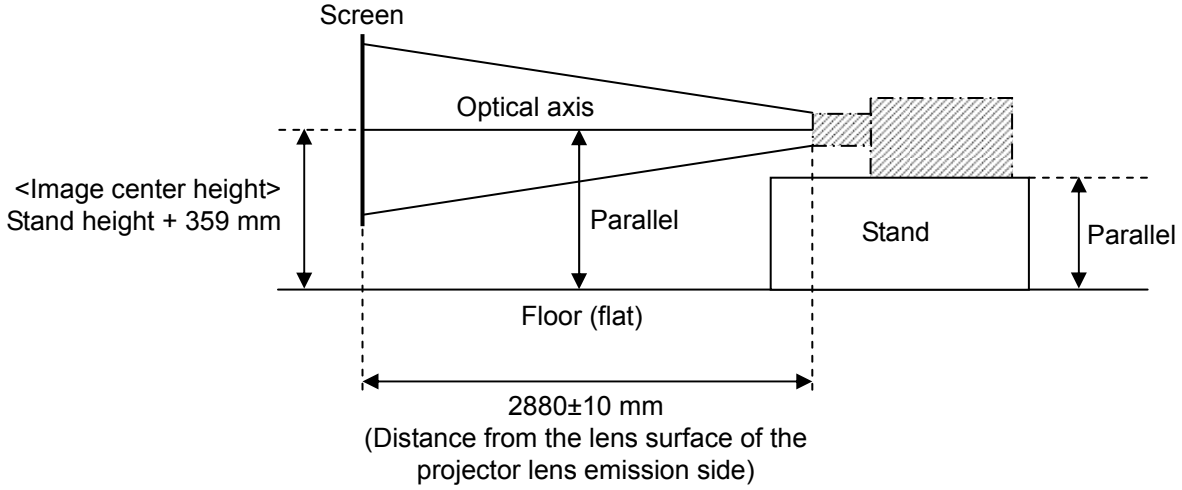

(Lens used: NC-60LS13Z)

* When the lens Zoom is moved from Wide to Tele, the deviation from the center position shall be kept within ±8mm (for the screen width of 1.98 m).

2. AC input power source

The projector supplies the power through the connections specified below.

- C1 connection: (1 power cable)
  The power is supplied from the terminal board to the Set and Ballast sides in common.
  Single phase AC input power source: 200 - 240 V AC, 50/60 Hz
- C2 connection: (2 power cables)
  The power is fed from AC inlet to the Set side and from the terminal board to the Ballast side.
  Set side: Single phase AC input power source: 100 - 240 V AC, 50/60 Hz
  Ballast side: Single phase AC input power source: 200 - 240 V AC, 50/60 Hz

3. Firmware, Data and Application Program

Digital Cinema Communicator
TI ICP and Enigma Control Program
Excel sheet for MCGD judgement
LENS calibration tool

The specified version shall be used, without fail.
If the name and others are different from the descriptions, the latest release division or the equivalent shall be used.

4. Devices used

PC (including Application Program, Data)
USB memory
Remote controller (REM-T HAND UNIT RD-371E: 7N900124 or equivalent)
LAN cable: Category 5E or better
Illuminance meter: KONICA MINOLTA CL-200
Multi-spectrophotometer: Photo Research PR-650
Digital multi meter
Screen: White Mat (Gain 1.0)
Primary lens: NC-60LS13Z

5. Common setting

5-1. Power switch

The projector is provided with the three power switches as specified below.

① PJ POWER switch

② LAMP POWER switch

③ Control panel power button
ON (The button lights in green.)
OFF (The button lights in white.)

The power system notation is as shown below.

POWER ON: All switches of ①, ②, and ③ are ON.

STANBY: Switches of ① and ② are ON.

POWER OFF: Switches of ① and ③ are OFF.

* Unless otherwise specified, Switch ② shall be ON.
If ② is OFF and ① only is ON, "LPSU Fail" is displayed on the LCD screen and the buzzer sounds.
POWER CYCLE: Power ON > Power OFF or vice versa.

5-2. Special mode setting

1) In the standby mode, keep pressing the CTL + PIXEL keys of the remote controller for 10 seconds.
2) When the message below is displayed on the LCD screen, select "Yes" and press the ENTER key.

3) When the power is ON, the projector is started with the lamp unlit.
While the projector is used in this mode, the following message is displayed on the LCD screen.

* This setting is available only once per power cycle.

5-3. Adjusting/checking USB memory production procedure

* During the adjustment or checking, insert the memory in the USB terminal of the projector CPU board.

① USB memory for adjustment setup
Use the USB memory where these data are stored.

② For CPU board update

1) In the USB memory of ①, produce the "_pjfirm!" and "_pjdat!" folders from the PC to the root.
2) Copy "Firmware(ncfirm_v1xx.bin)" in the "_pjfirm!" folder.
3) Copy "Data(nc20vxxx_factry.bin)" in the "_pjdat!" folder.

```
Root
 ├──── _pjfirm!
 │            ncfirm_v1xx.bin
 └──── _pjdat!
              nc20vxxx_factry.bin
```

5-4. Network setting for the checking PC

Set up the PC network with the values specified below.

IP-address: 192. 168. 10. 17
Gateway: 192. 168. 10. 17
Subnet mask: 255 .255 .255.0

While the checking software is used, connect the PC with the projector through the LAN cable.

5-5. Digital Cinema Communicator (DCC) setup

∗ For "DCC" starting in adjustments, use the shortcut icon specified below in the first place.

1) Copy the DCC installer file "DCCs2(Ver+****).exe" in the checking PC.
2) Double-click the saved file to start the Installer.
3) Follow the installation procedure according to the installer instructions.
4) Open the Start > All Program > Projector User Supportware menu. Right-click "Degital Cinema Communicater for S2", and press "Send" > "desktop (create shortcut).
5) Right-click the shortcut icon on the desktop to open the property window.
6) Select the "shortcut" tab, enter "m/MF" in the last section of word in the "Link Destination" window, and press "OK."
   Example) "･･･DCC_S2¥DCCs2.exe" > "･･･DCC_S2¥DCCs2.exe"□/MF
   ∗ □: space
7) Click the shortcut icon on the desktop to start "Digital Cinema Communicator".
8) Check that "MODE(F)" is displayed on the MODE button. (①)
   * If there is any deficiency in the above setting, "(F)" is not displayed.
9) Select the "Projector" checkbox under "Target Select". (②)
10) Select the "IP Address" checkbox under "Communication Device Setting".
    Enter "192.168.10.10" in the "IP Address" window. (③)
    Press "OK". (④)

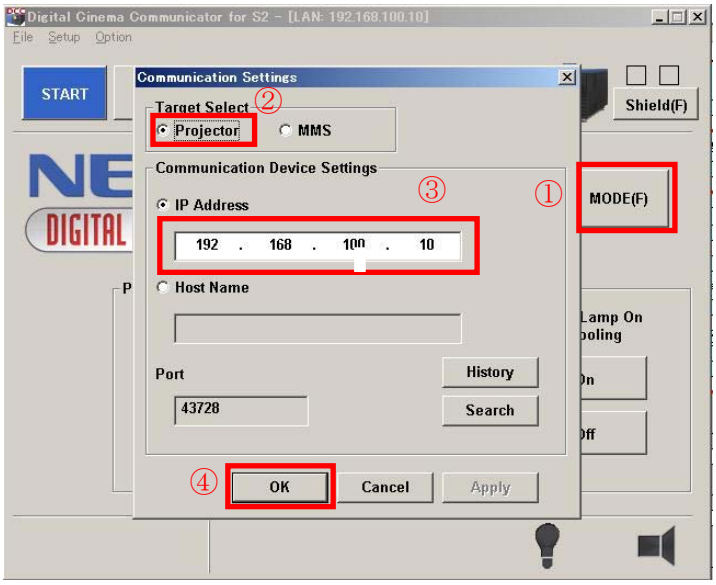

6. Basic operation

6-1. Test Pattern

① Remote controller

1) Press the TEST key to shift to "TEST Pattern".

2) Select the desired title with LEFT or RIGHT cursor key, and press ENTER .

Test pattern list

	Name
1	Alignment
2	Cross hatch
3	Convergence
4	Red
5	Green
6	Blue
7	White
8	Black
9	White 50[IRE]
10	H-Ramp
11	Logo

② Control panel

1) Press MENU on the control panel to shift to the LCD screen.

Title Select > TEST Pattern

2) After displaying the appropriate title on the LCD screen, press ENTER .

6-2. MACRO direct button

The Number 1 - 8 button directly moves to the setup conditions specified in the table below.
Select: The button lights in green.
Non Select: The button lights in white.
The selected title name is displayed on the LCD screen.

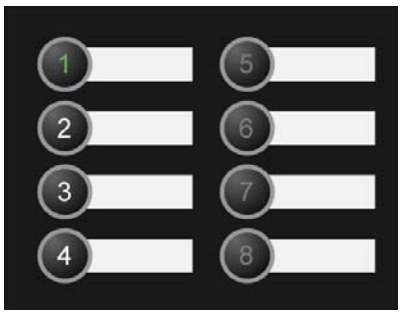

Macro Key	Title Name	Input Terminal	Anamorphic Turret
1	SDI A	SDI - A	OFF
2	SDI B	SDI - B	OFF
3	SDI C	SDI - C	OFF
4	SDI D	SDI - D	OFF
5	DVI A	DVI - A	OFF
6	DVI B	DVI - B	OFF
7	CrossHatch	Internal	OFF
8	Alignment	Internal	OFF
9	White100	Internal	OFF
—	Black	Internal	OFF
—	3D TEST SDI AB	SDI-A&B DUAL	OFF
—	SDI A W-ANAMO	SDI-A	ON
—	MMS SLOT1 DVI	MM-Slot1-DVI	OFF

6-3. Lamp control

① Lamp control

Hold down the  button for 3 seconds to select the Lamp ON or OFF.

Lamp ON (The button lights in green.)
Lamp OFF (The button blinks in white.)

② Lamp power control

Press LAMP to shift to "Lamp Setup Adjust".

When  is pressed, the lamp power is raised. (Value in % Up)

When  is pressed, the lamp power is lowered. (Value in % Down)

6-4. Douser control

Press DOUSER to changeover to Douser ON/OFF.

Douser ON: Close (The button blinks in white.)
Douser OFF: Open (The button lights in green.)

6-5. Lens control

Use the remote controller to shift the lens by combination operation as shown below.

CTL	+	RIGHT	: The output image moves to the right.
CTL	+	LEFT	: The output image moves to the left.
CTL	+	DOW	: The output image moves to the downward.
CTL	+	UP	: The output image moves to the upward.

6-6. Keylock

KEY LOCK is used to prevent operation errors of the control panel.

If no key input is entered for more than the specified time, this key is enabled and the entered key input is canceled.
To cancel the keylock, hold down this key for 2 seconds.
Enable: The button lights in umber.
Disable: The button lights in white.

* This function is disable in this adjustment.
However, it becomes enable in the following two cases:
- Power off > Stanby
- USB memory established as per 5-3 is inactive after the end of operation.

III. Package adjustment

1. Version check of the CPU board and update

* The adjusting USB memory card shall be inserted in the USB port.

1-1. Version check

1) Press MENU on the control panel to change to the LCD screen.
   Information > Version > System
2) Confirm that the BIOS, firmware, and data displayed on the LCD screen are pertinent to the specified version.

* If they are not pertinent to the specified version, updating is required according to the item below.

1-2. Firmware update

Location: IC7009

1) Turn on the PJ POWER switch  while EXIT is pressed.

2) When the LED of  becomes in white, press EXIT.

3) Press  to start the data update.

During data update

End of data update

4) When the setup is complete, "Completed" is displayed on the LCD screen.

* In the case of NG, a red LED of the power button blinks and "Error" is displayed on the LCD screen. Retry from Item 1. In the case of NG again, replace the CPU board.

5) Turn off the PJ POWER switch.

1-3. Data update

Location: IC7008

1) Turn on the PJ POWER switch  while EXIT is pressed.

2) When the LED of 

becomes in white, press EXIT.

3) Press MENU to start the data update.

During data update

End of data update

4) When the setup is complete, "Completed" is displayed on the LCD screen.

* In the case of NG, a red LED of the power button blinks and "Error" is displayed on the LCD screen. Retry from Item 1. In the case of NG again, replace the CPU board.

5) Turn off the PJ POWER switch.

IV. Set Assy adjustments

1. Visual checks

Let the projector stay in the non-electrified state and confirm the following items.

1) Missing parts, discrepancy in parts, and non-contact among parts
2) Assured connections around connectors according to the layout
3) No presence of inner cables bent at acute angles and keeping contact with sharp edges

2. Power cable installation

Caution:

In regard to power cable connections, confirm that the power is not supplied.
If there is no designation, follow the step ①.
Screw tightening should be carried out at the specified tightening torque indicated on the assembly diagram.

① C1 connection
The power is supplied from the terminal board to the Set and Ballast sides in common.
Connect Cable "1" to "A" of the ACS PWB.
Connect Cable "2" to "B" of the ACS PWB.
Attach the Live, Neutral, and GND cables to the terminal board.

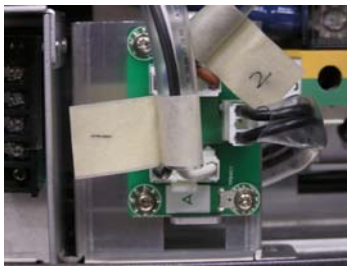

② C2 connection
The power is supplied from AC inlet to the Set side and from the terminal board to the Ballast side.
Connect Cable "1" to "B" of the ACS PWB.
Connect Cable "2" to "B" of the ACS PWB.
Attach cables to the terminal board in the same manner as for ① above.
Connect an AC cable to the AC inlet.

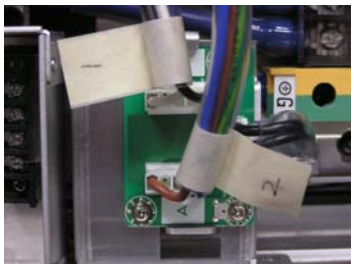

3. General Power Supply Unit output checks (PJDIV PWB)

1) Remove all boards other than the PJDIV PWB from the Mother PWB.

2) Turn on the PJ POWER switch.

3) 12V-line / 24V-line voltage check
Using a digital meter, confirm that the output voltages of the two systems are kept within the standard values specified below.

- 12V-line: 11.5V - 12.5V [VDC]
  Measuring point: Between TPP12 and TPPGND
- 24V-line: 23.0V - 25.0V [VDC]
  Measuring point: Between the + side of C1003 and TPPGND

* In the case of deviation from the standard values, replace the general power supply.

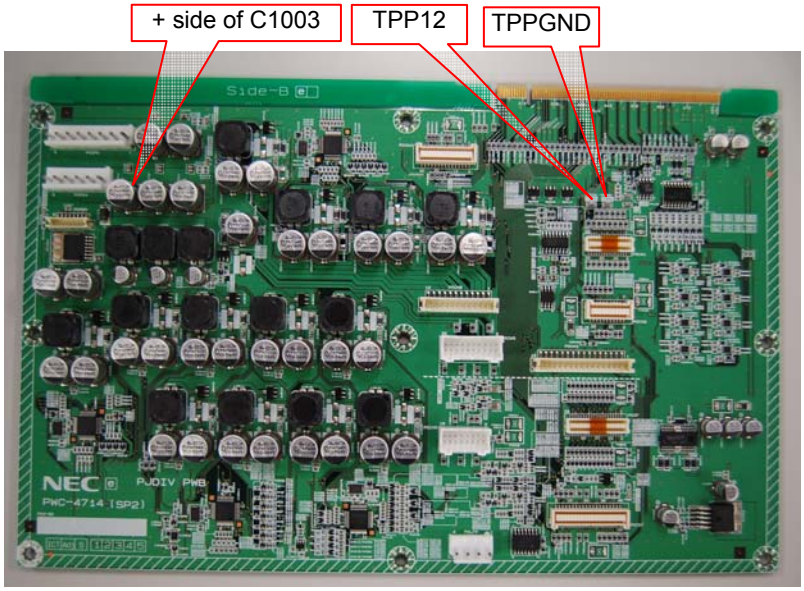

4. Version check of the CPU board and update

Same as for "Version check of the CPU board and update" of "III. Package adjustment"

5. Router setup

* The projector cannot maintain LAN communication till completion.

1) Power Stanby
2) Press MENU on the control panel to shift the LCD screen.
   Configuraton > Installation > New Router Setup

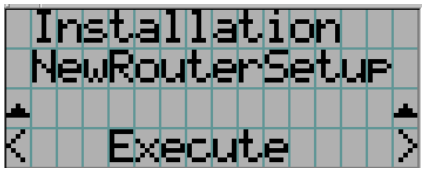

3) Press ENTER.
4) When the setup is complete, "Completed" is displayed on the LCD.

5) Press ENTER to return to the upper layer.

* In the case of NG, "Fall" is displayed on the LCD screen.
Turn the power off and check whether the LAN and power cables are assuredly connected.

If the MAC address of the router is incorrect, a message below is displayed.
In such a case, the router is regarded as faulty.

6. Status check of the ENIGMA board and update

6-1. Version check of the software/firmware

1) Start up the main unit in special mode.
2) Start "ICP and Enigma Control Program" from PC.
3) Enter "192 168 10 10" in the IP address window. (①)
4) Select the [External Ethernet Port] checkbox of "Connection to ICP". (②)
5) Press Login. (③)

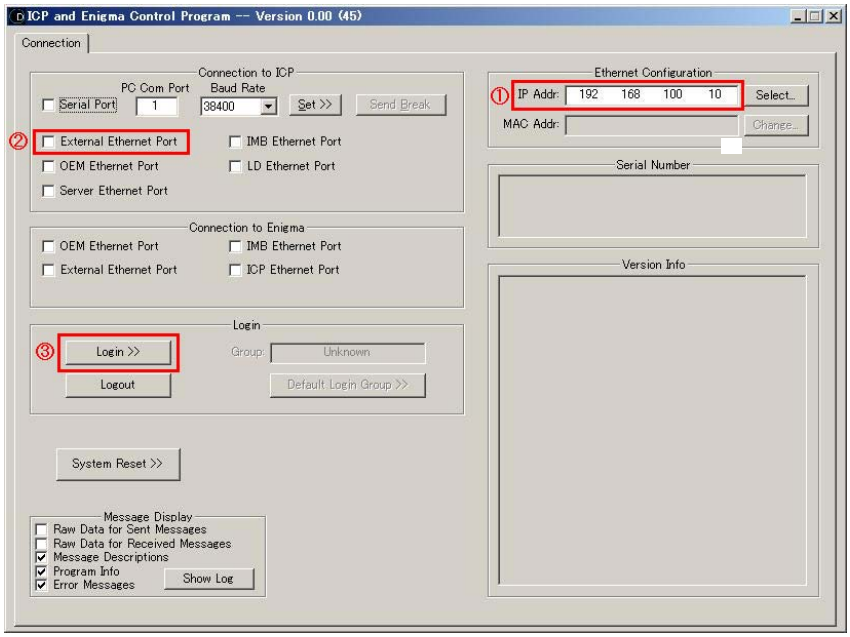

6) Enter "User ID" and "Password" of the "Projector Login" pop-up window, and press OK.
   ID: Service
   Password: Heal□Thyself (□: Space)

7) Confirm that all software and firmware displayed in the "Version Info" window are the specified versions.
   * If they are not pertinent to the specified version, update the version according to the item below.

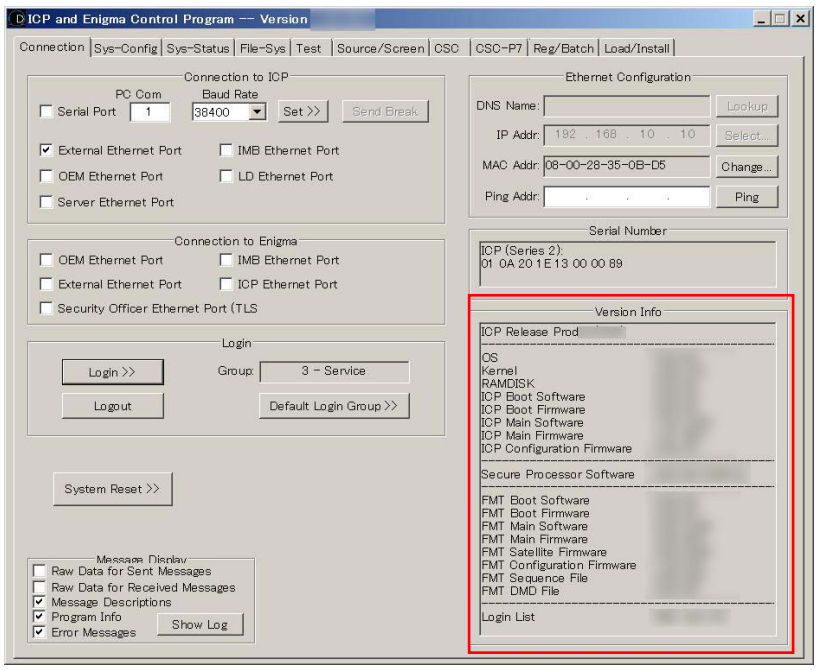

6-2. Status check

1) Start "ICP and Engine Control Program" from the PC for login.
2) Select the [Sys-Status] tab.
3) Check that the indication "Fail" or "Error" is not displayed in "System Error" and "Self Test Result".

* If any error is found, turn the power OFF and confirm that the ICP board and the wire cable (between Mother board and FSB) are assuredly installed.

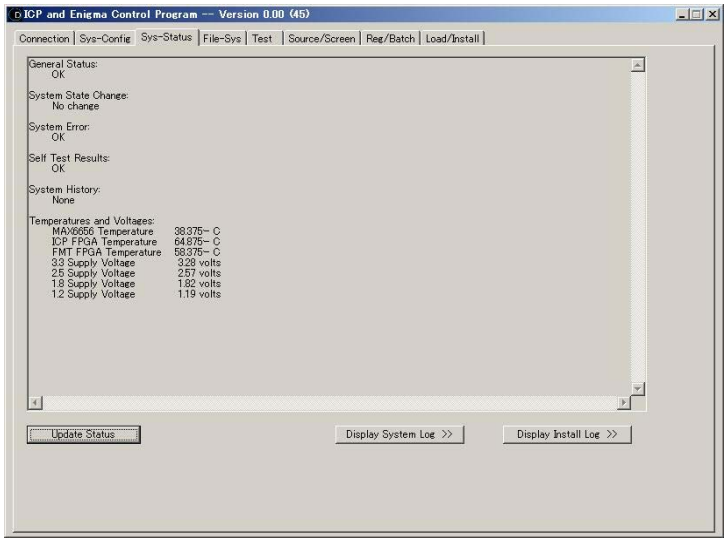

6-3. Software and firmware update

Check the contents of execution.

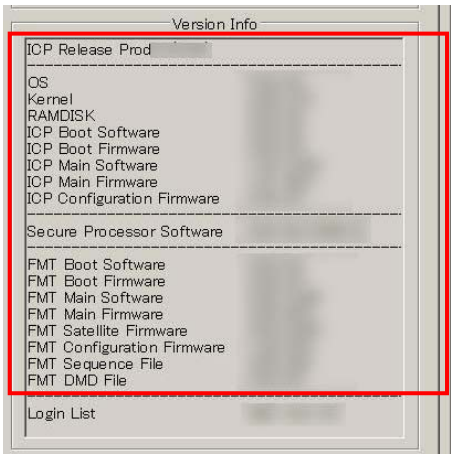

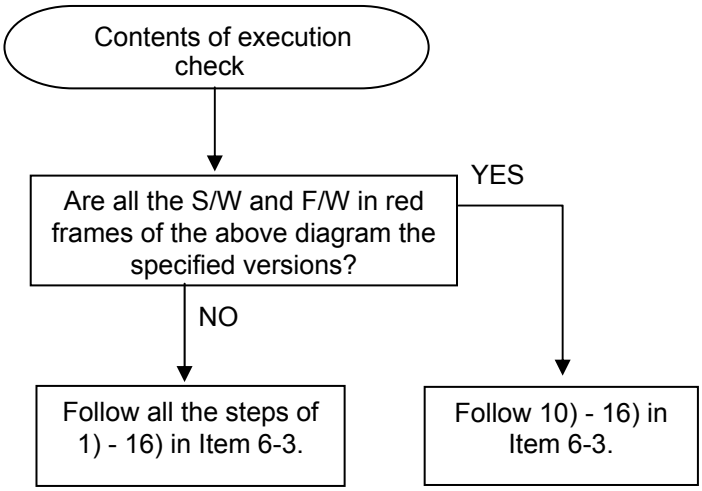

1) Select the "Load/Install" tab.
2) Select the "Slot A" checkbox under "Release Slot". (①)

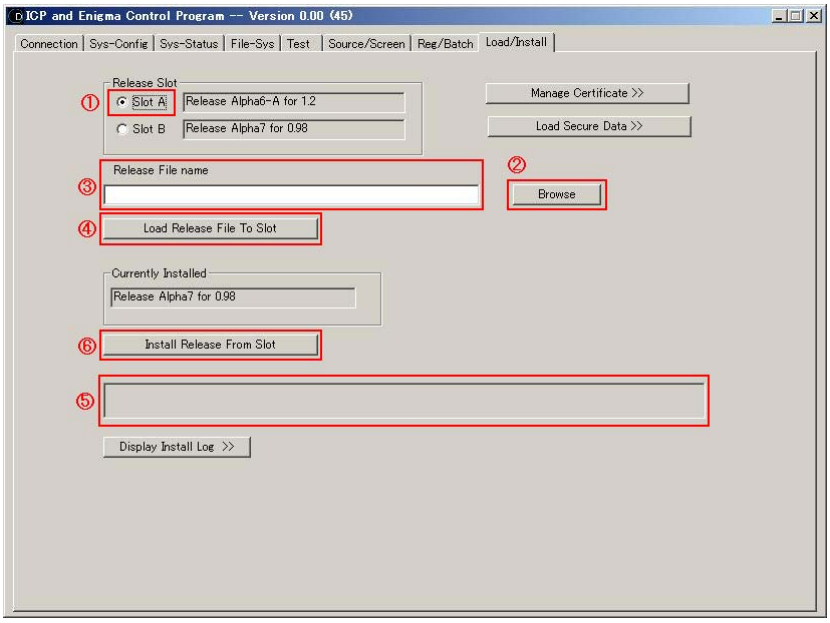

3) Press the "Browse" button. (②)

Select the specified file (extension=release) from the pop-up window.

4) Check that the selected file is displayed in the "Release File name" window. (③)
5) Press "Load Release File To Slot". (④)
6) Check that 'Load "File name" to slot A was successful' is displayed in the box ⑤.
7) Press "Install Release From Slot". (⑥)
8) Check that 'Install "File name" from slot A was successful' is displayed in the box ⑤.
9) Press "Connection" tab.

10) Press the "Login" button, and enter "User ID" and "Password" of the "Projector Login" pop-up window. Press the [OK] button.
ID: OEMOEM
Password: Factory□Use□Only
* □: space

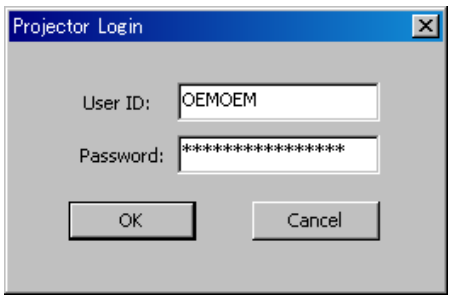

11) Press the "Load/Install" tab, and press the "Load Secure Data" button.

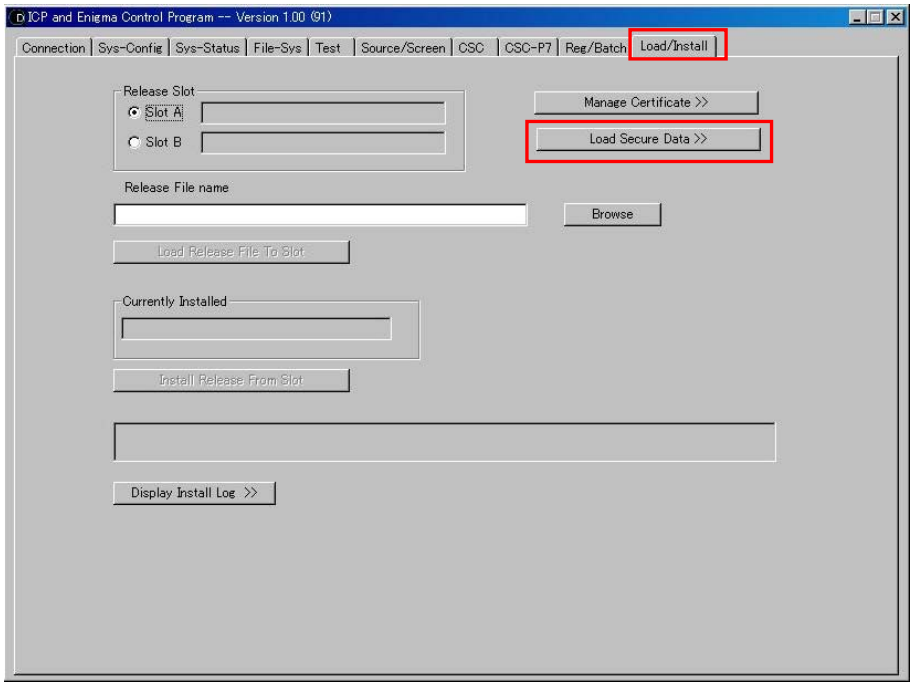

12) After selecting "TI Login List(*.tll)" from "File Type", select "nec_ti_loginlist_*_*_*_ICP.tll".

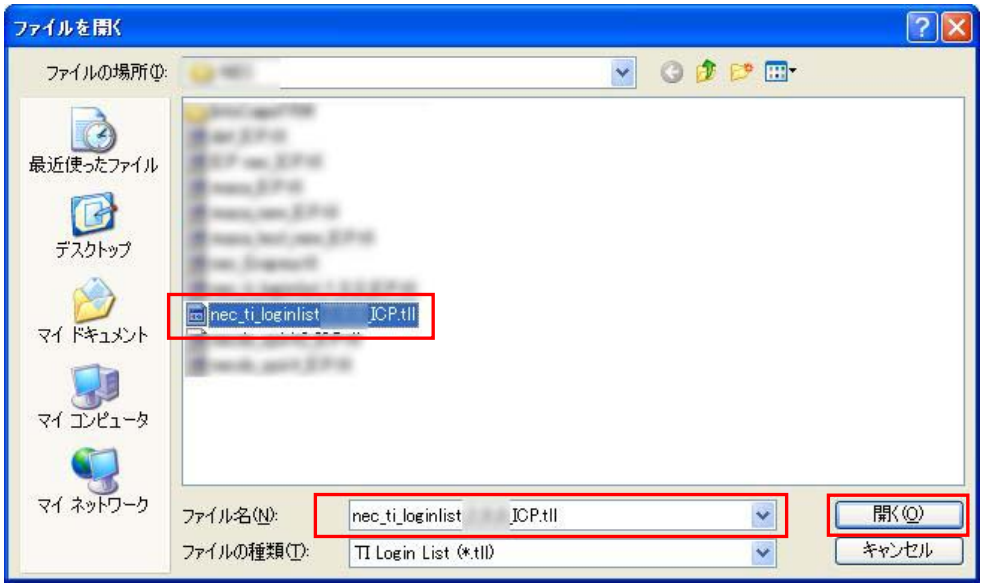

13) After the data write, check that "Secure Data Exchange succeeded" is displayed as follows.

14) Turn off the power of the main unit to reflect update, and start it again in special mode.
15) Press "Connection" and confirm that all software and firmware indicated in the "Version Info" window are the specified versions.
16) Turn off the power switch.

6-4. LED definitions

LED Identifier	Short Description	Full Description
PWR	Regulators Enabled	Indicates the presence of the internal regulator enable signal. This signal enables the following regulators: ICP 3.3VDC, 2.5VDC, 1.8VDC, and 1.2VDC Satellites 3.3VDC and 2.5VDC USB 5.0VDC Off = Internal regulators not enabled Blue = Internal regulators enabled
SOFT	Software State	Indicates the state of the software application. Off = FAIL (State 0) Red = FAIL (State 1) Yellow = FAIL (State 2) Green = OK
OS	Operating System State	Indicates the state of the Operating System. Off = FAIL (State 0) Red = FAIL (State 1) Yellow = FAIL (State 2) Green = OK
FMT	FMT FPGA State	Indicates the configured state of the FMT FPGA. Off = N/A Red = Unable to configure FPGA with Main or Boot application Yellow = Boot Application Green = Main Application
ICPS	ICP FPGA State	Indicates the configured state of the ICP FPGA. Off = N/A Red = Unable to configure FPGA with Main or Boot application Yellow = Boot Application Green = Main Application
PORT A	Status of Port A	Indicates the status of ICP input port A. Off = No Source Present Red = TBD Yellow = TBD Green = Active Source Present
PORT B	Status of Port B	Indicates the status of ICP input port B. Off = No Source Present Red = TBD Yellow = TBD Green = Active Source Present

7. Status check of the ENIGMA board and update

7-1. Version check of the firmware/data

* This board denotes the ENIGMA board installed on the Legacy interface board.

1) Start this unit in special mode, and start "ICP and Enigma Control Program".
2) Enter "192 168 10 10" in the IP address window. (①)
3) Select the [External Ethernet Port] checkbox of "Connection to Enigma". (②)
4) Press Login. (③)

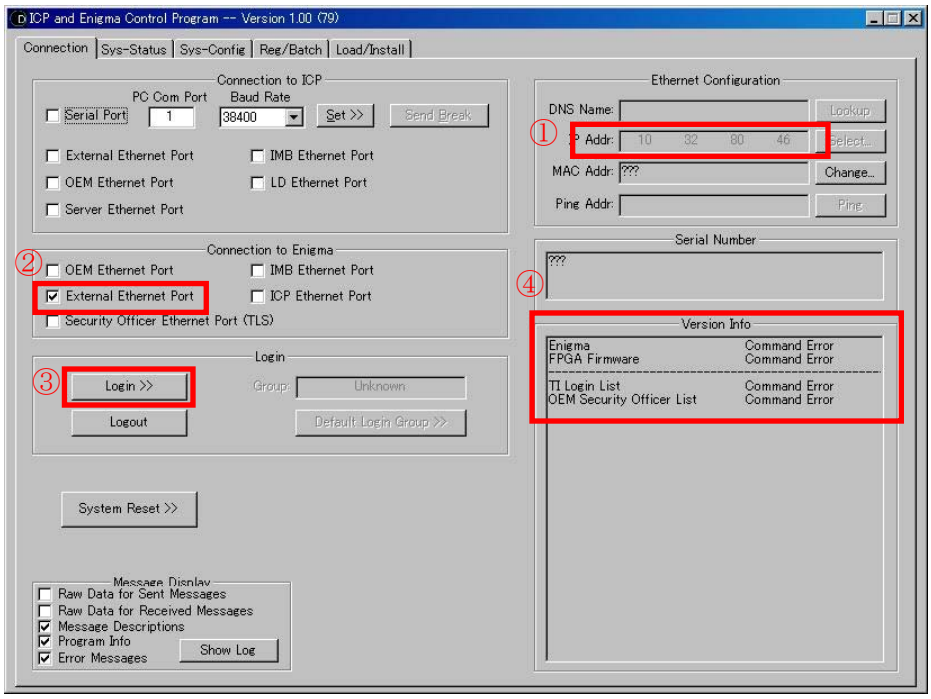

5) Enter "User ID" and "Password" of the "Projector Login" pop-up window, and press OK.
   ID: OEMloginname00
   Password: OEMpassword

6) When login is successful, a version is displayed in the "Version Info" window. Confirm that it is a specified version. (④)

7-2. Status check

1) Select the [Sys-Status] tab.

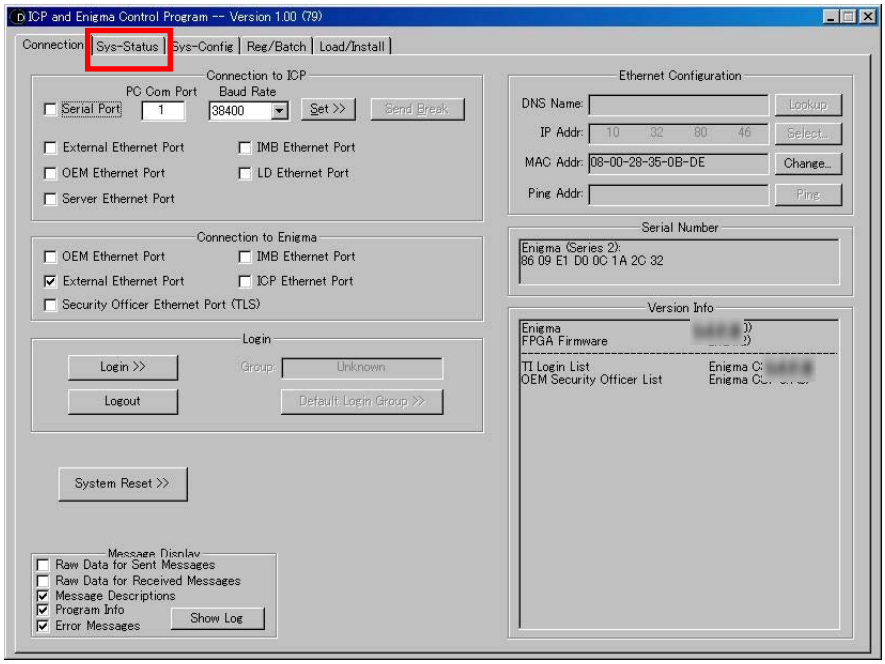

2) Confirm that the four status items shown below are displayed in the Security Status column.

Security Enclosure Armed
Physical Marriage Tamper
Marriage NOT Active
Service Door Tamper

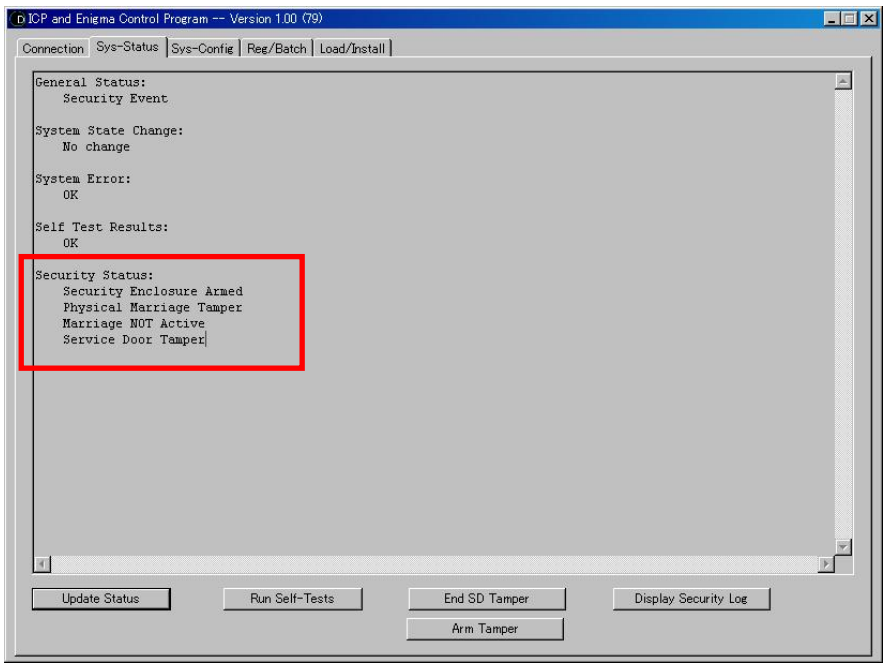

7-3. Firmware/FPGA/data update

Caution: Update shall follow the following working steps.
If the steps are followed wrongly, there is the possibility of the Enigma Board failing in correct operation and reset.

Check the contents of execution.

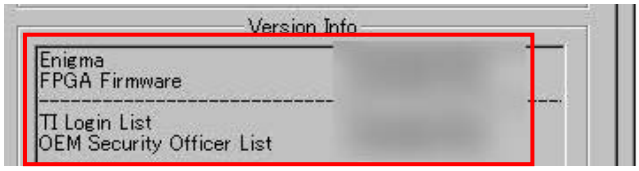

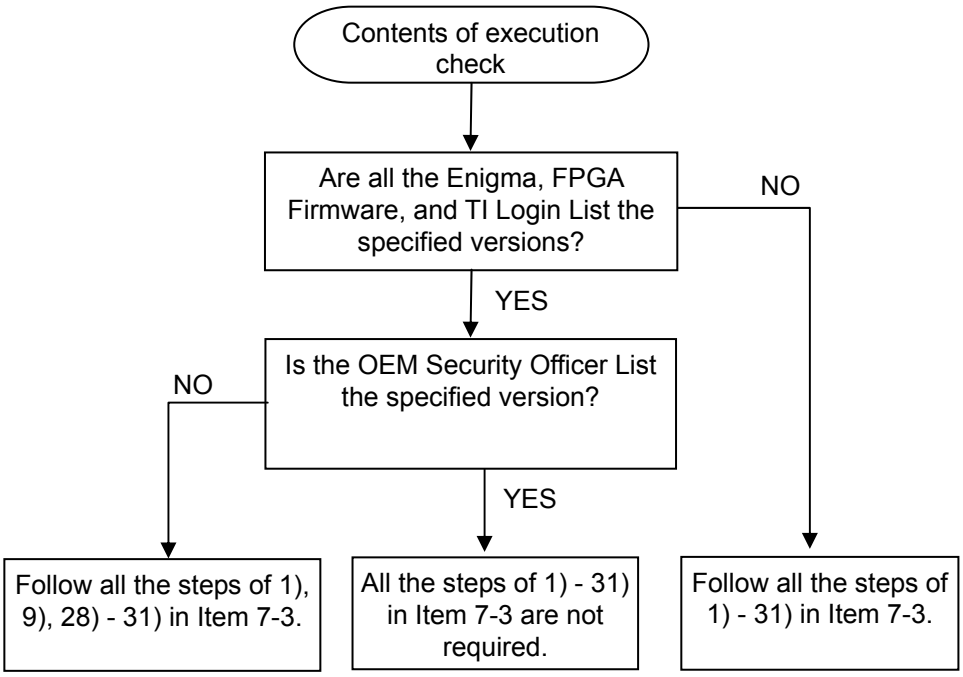

1) Start the unit in special mode.
2) Start "ICP and Engine Control Program" for login according to 7-1 2) - 5).
3) Select the "Load/Install" tab. (①)

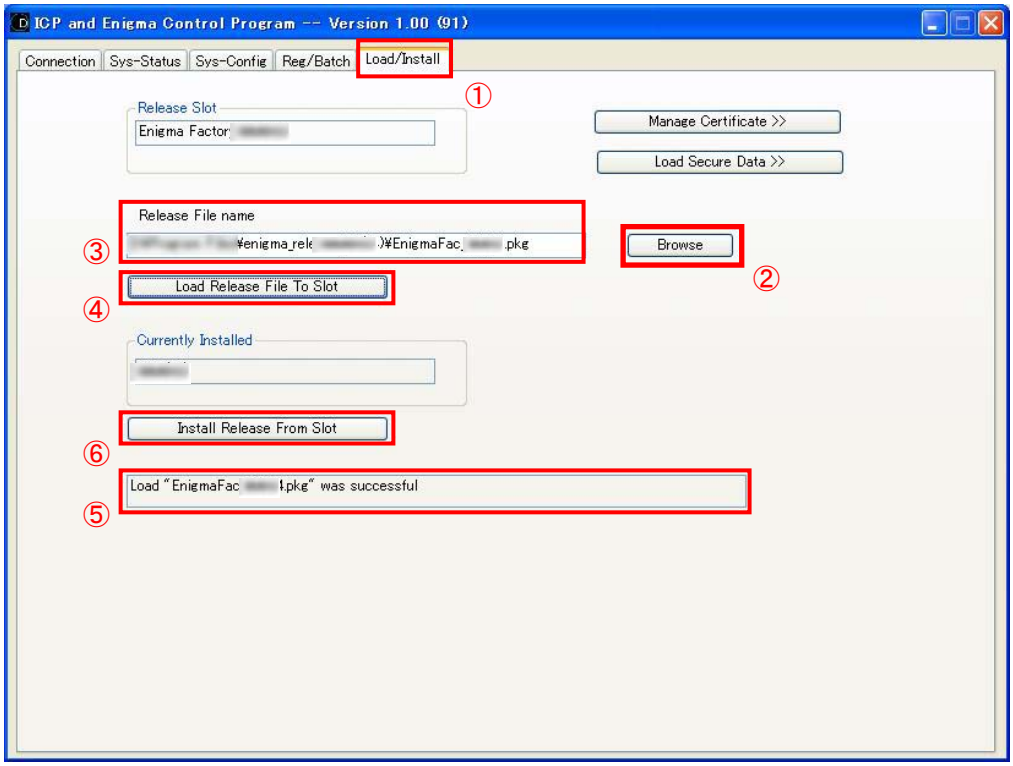

4) Press the [Browse] button. (②)
Select "EnigmaFac_****.pkg" from the pop-up window.

{0>注意：<}100}>Caution: {0>選択 File を間違えないこと。<}0}>Do not confuse the selected file. <0}
If the steps are followed wrongly, there is the possibility of the Enigma Board failing in correct operation and reset.

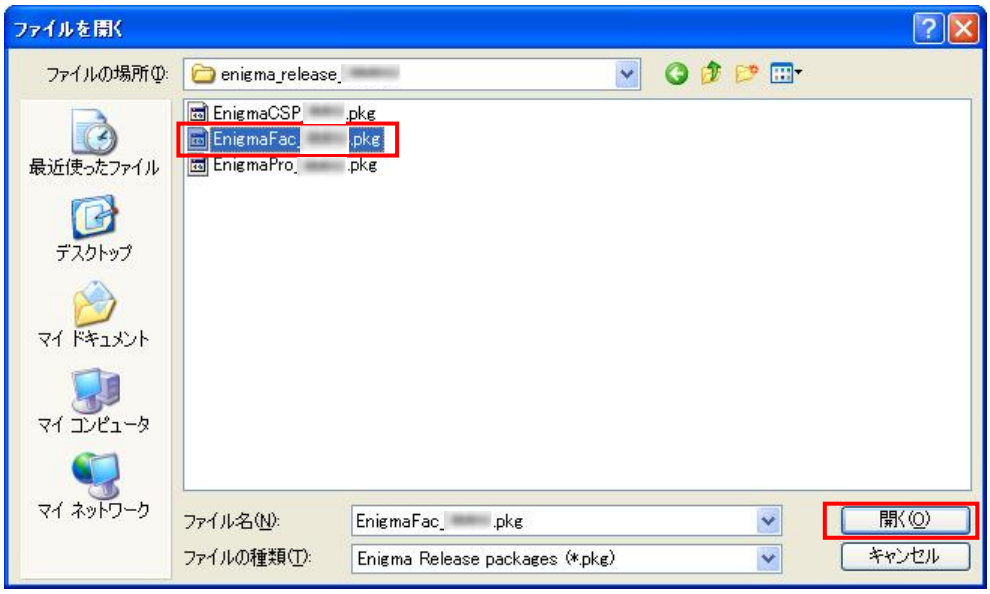

5) Check that the selected file is displayed in the "Release File name" window. (③)
6) Press "Load Release File To Slot". (④)
7) Check that "Load EnigmaFac_****.pkg was successful" is displayed after completing the download as shown in ⑤.
8) Press "Install Release From Slot". (⑥)
9) Check that "Install EnigmaFac_****.pkg was successful" is displayed after completing the data update as shown in ⑦.

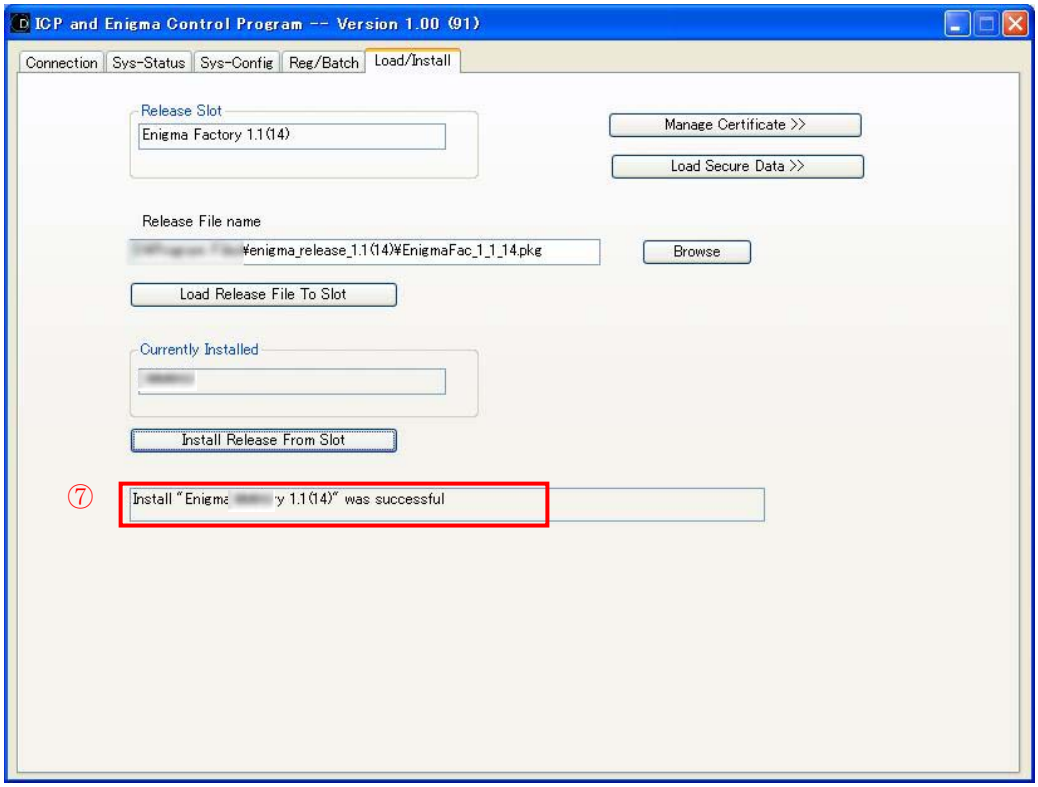

10) Press the [Browse] button. (⑧)
Select "EnigmaCSP_****pkg" from the pop-up window.

{0>注意：<]100]>Caution: {0>選択 File を間違えないこと。<]0]>Do not confuse the selected file. <0}
If the steps are followed wrongly, there is the possibility of the Enigma Board failing in correct operation and reset.

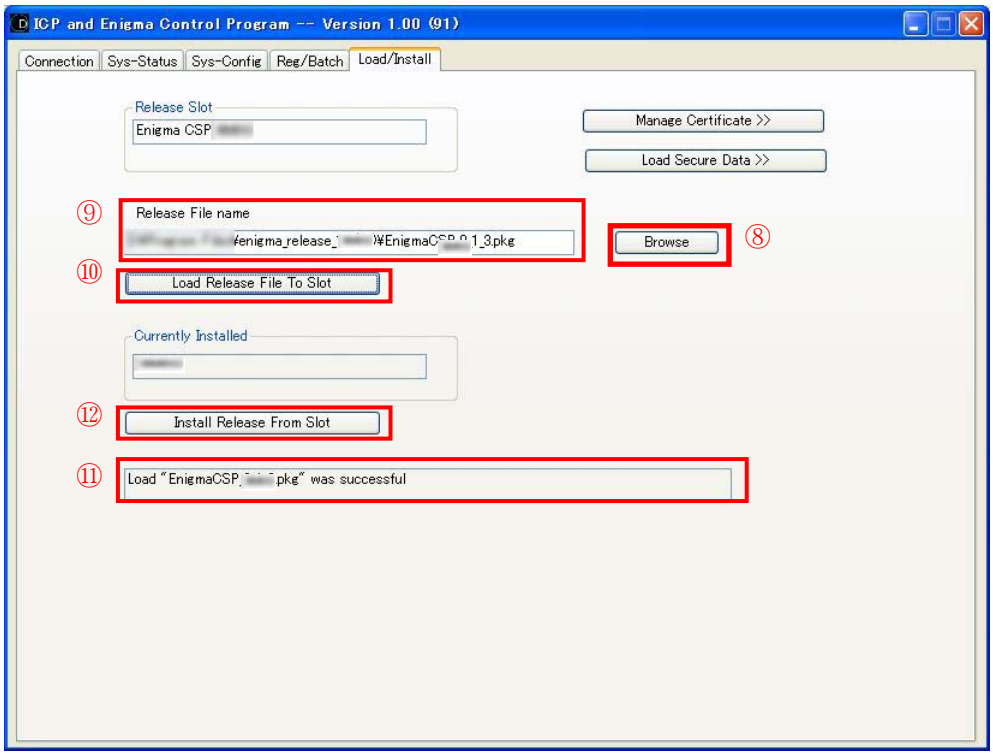

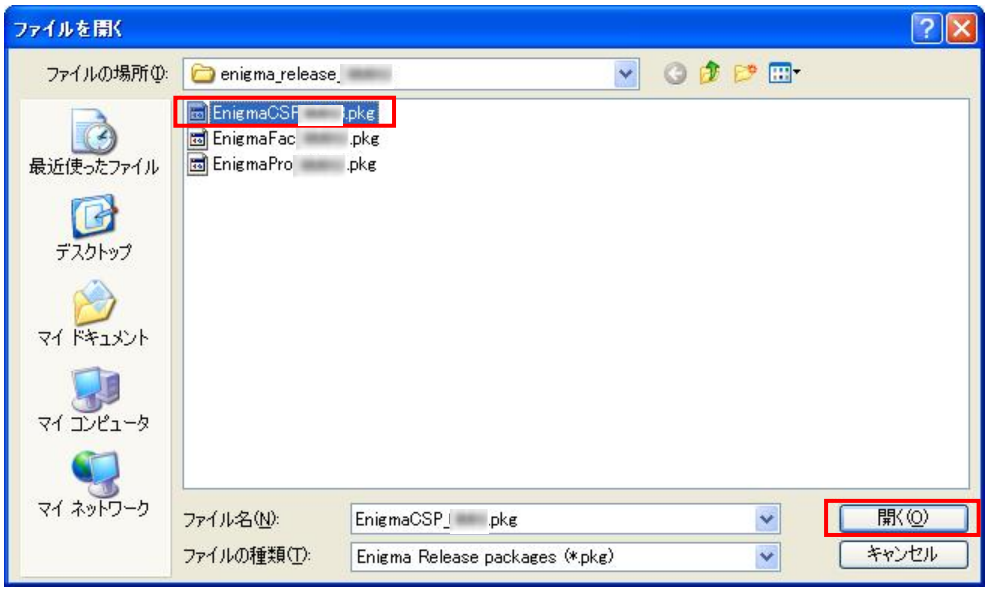

11) Check that the selected file is displayed in the "Release File name" window. (⑨)
12) Press "Load Release File To Slot". (⑩)
13) Check that "Load EnigmaCSP_****.pkg was successful" is displayed after completing the download as shown in ⑪.
14) Press "Install Release From Slot". (⑫)

15) Check that "Install Enigma CSP_****.pkg was successful" is displayed after completing the data update as shown in ⑬.

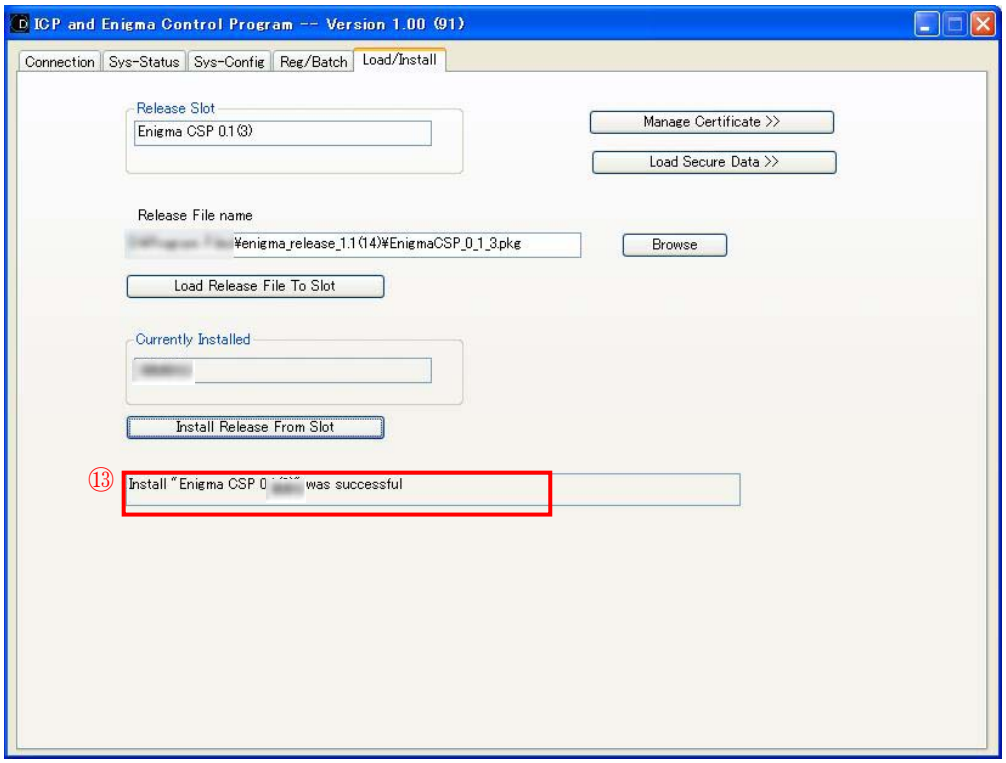

16) Press the "Sys-Config" tab (⑭), and press "Factory Reset" button. (⑮)

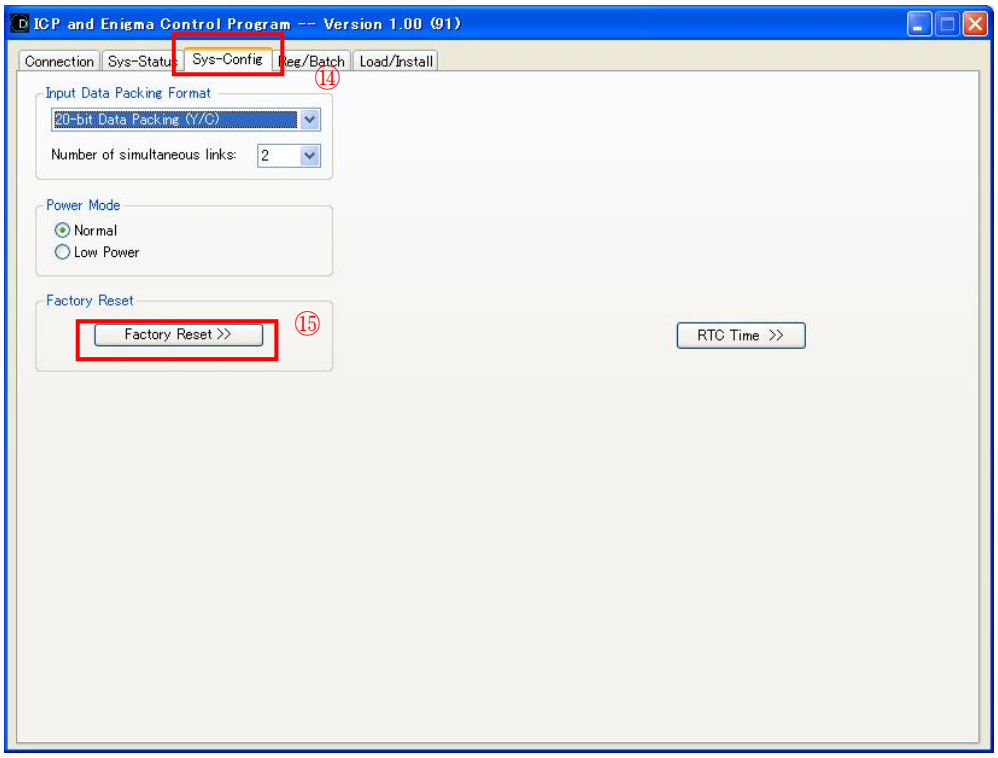

17) Press the [Yes] button to reset the setup data to the factory defaults. (⑯)

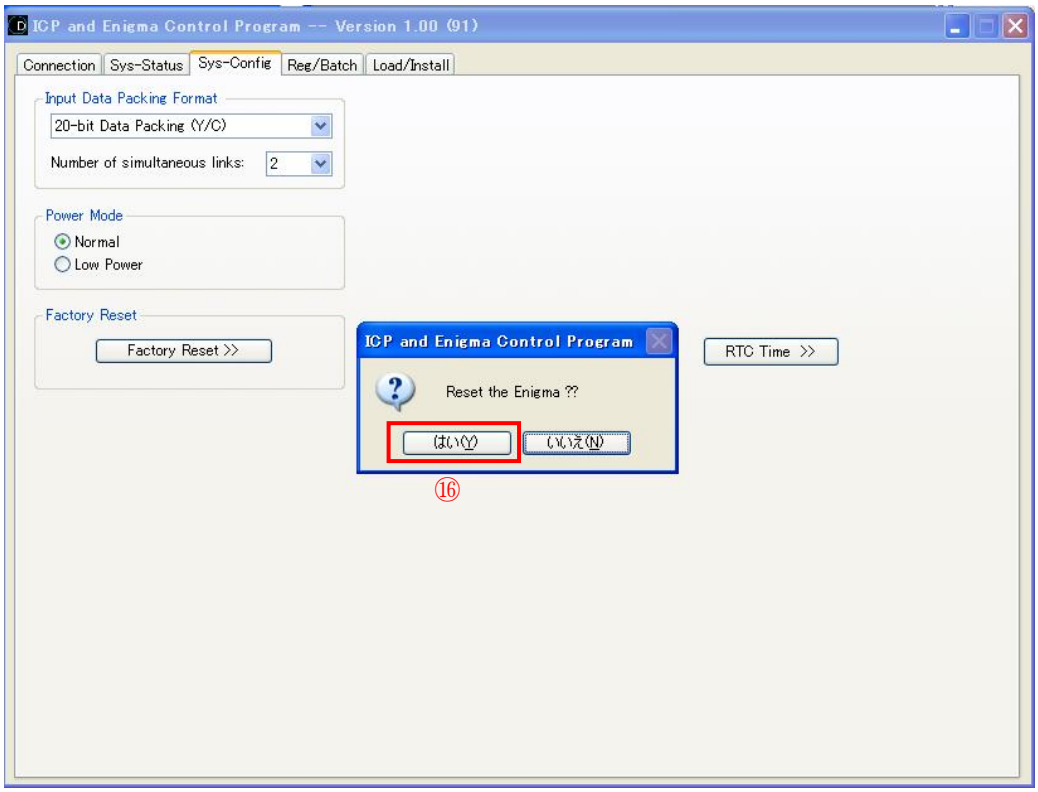

18) Press the "Sys-Status" tab after resetting the setup data. (⑰)
Check that "Security Enclosure Armed" is not displayed in the "Security Status" column, and press the "Arm Tamper" button. (⑱)

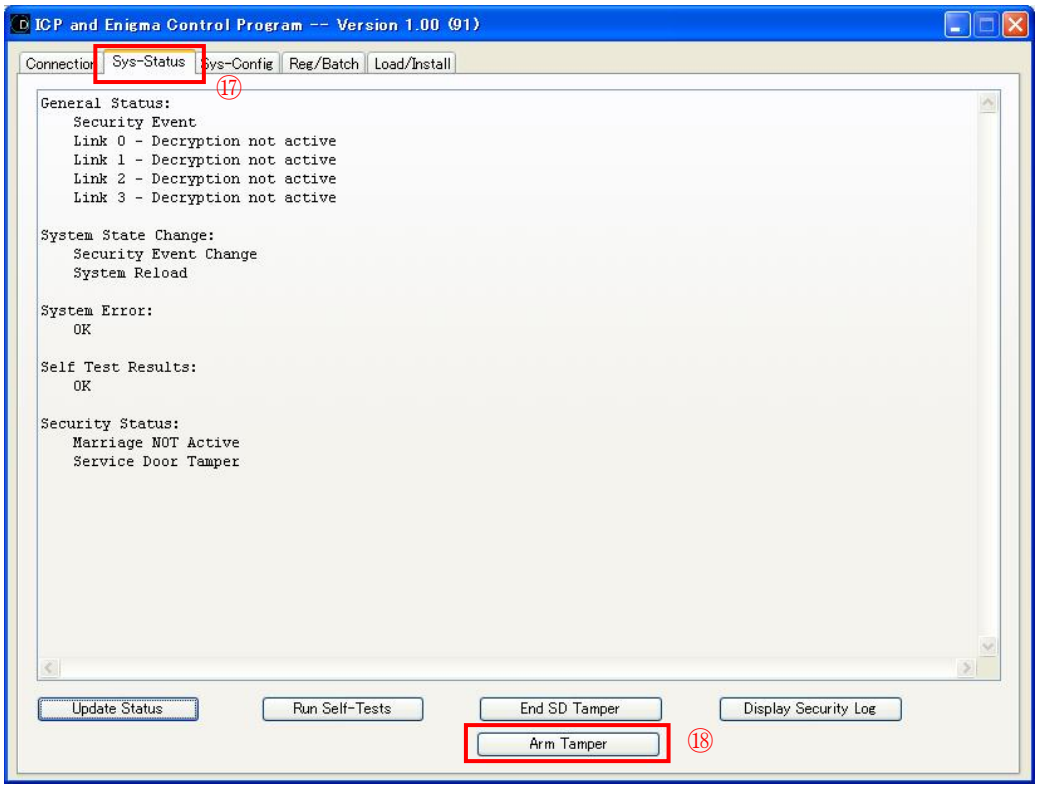

19) Check that "Security Enclosure Armed" is displayed in the "Security Status" column. (⑲)
If no indication is displayed, follow the step 18) again.

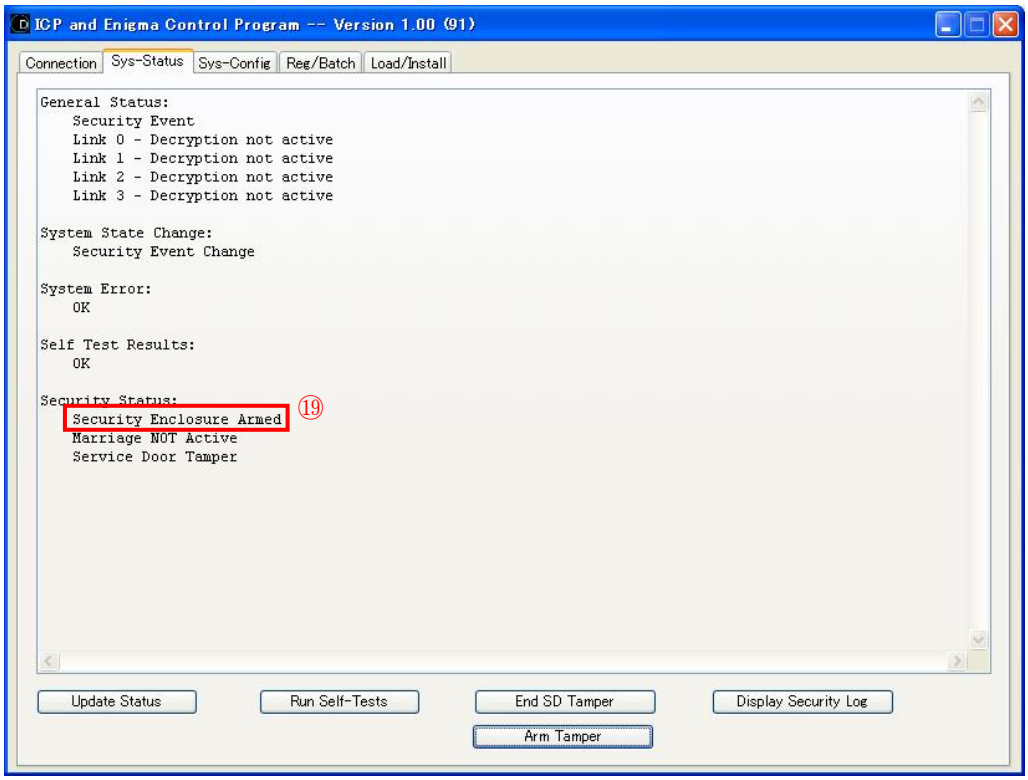

20) Select the "Load/Install" tab. (⑳)

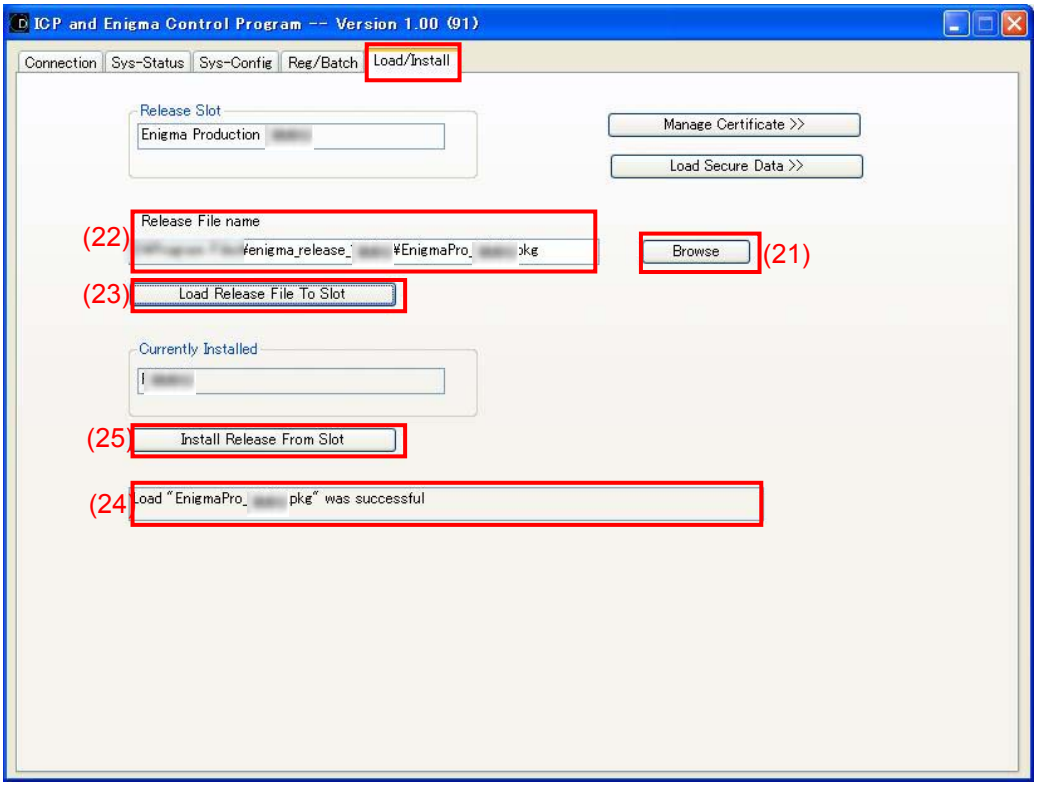

21) Press the "Browse" buton. (21)
Select "EnigmaPro_****.pkg" from the pop-up window.

> {0>注意：<|100|>Caution: {0>選択 File を間違えないこと。<|0|>Do not confuse the selected file. <0}
> If the steps are followed wrongly, there is the possibility of the Enigma Board failing in correct operation and reset.

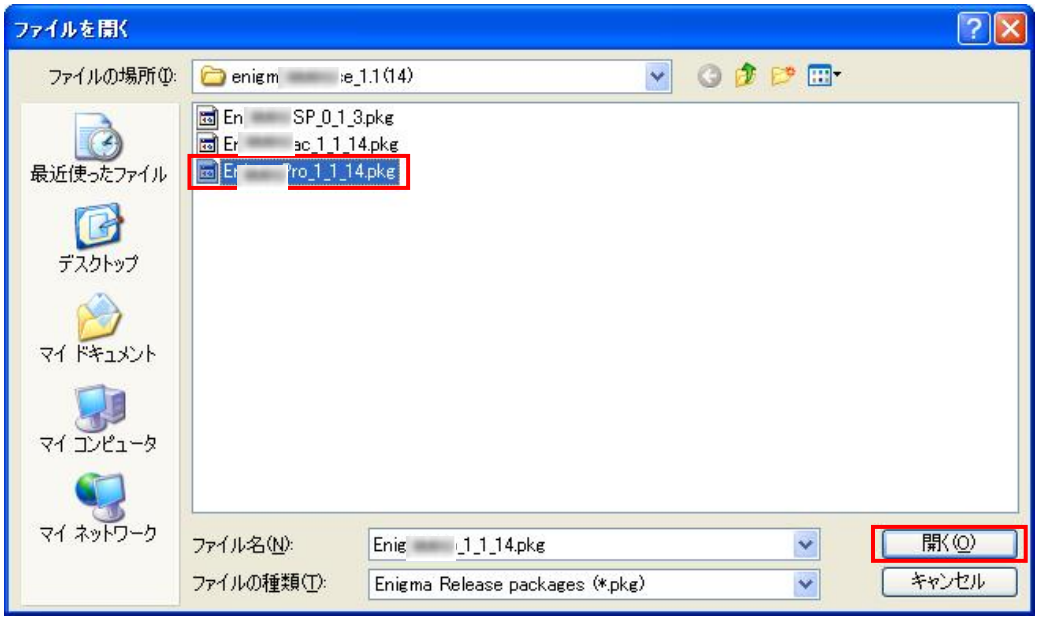

22) Check that the selected file is displayed in the "Release File name" window. (22)
23) Press "Load Release File To Slot". (23)
24) Check that "Load EnigmaPro_****.pkg was successful" is displayed after completing the download as shown in (24).
25) Press "Install Release From Slot". (25)

26) Check that "Install EnigmaPro_****.pkg was successful" is displayed after completing the data update as shown in 26.

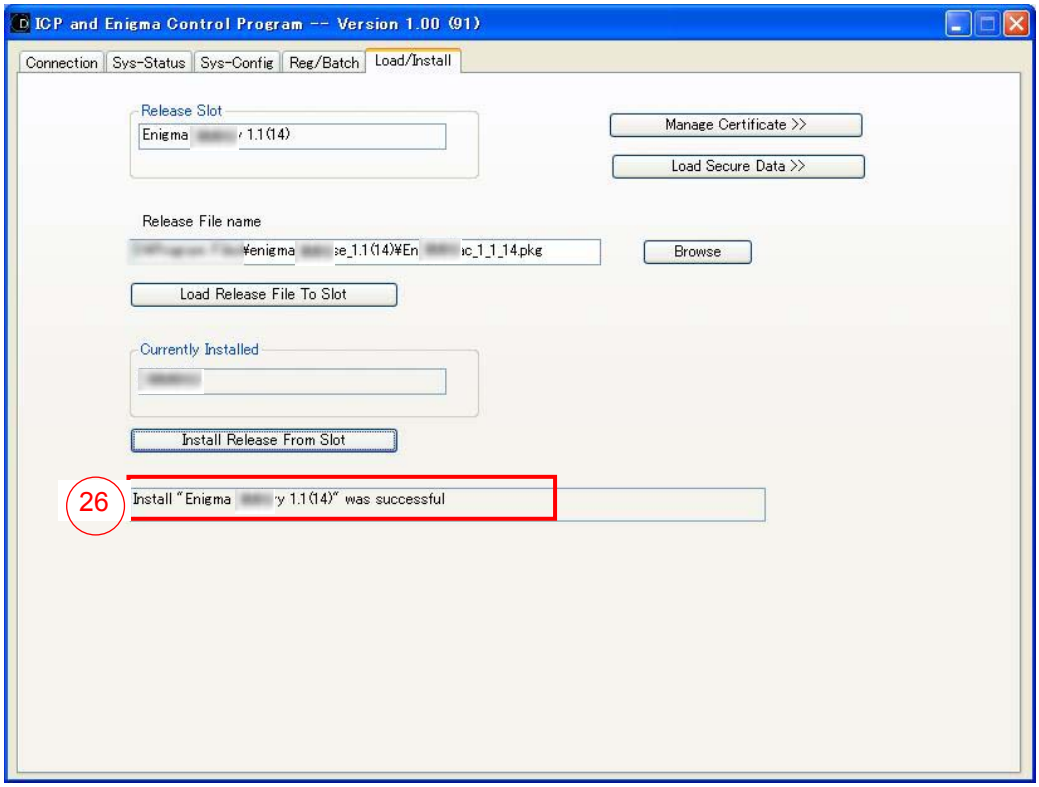

27) Press the "Connection" tab and make login again according to 27, 7-1 4) - 5).

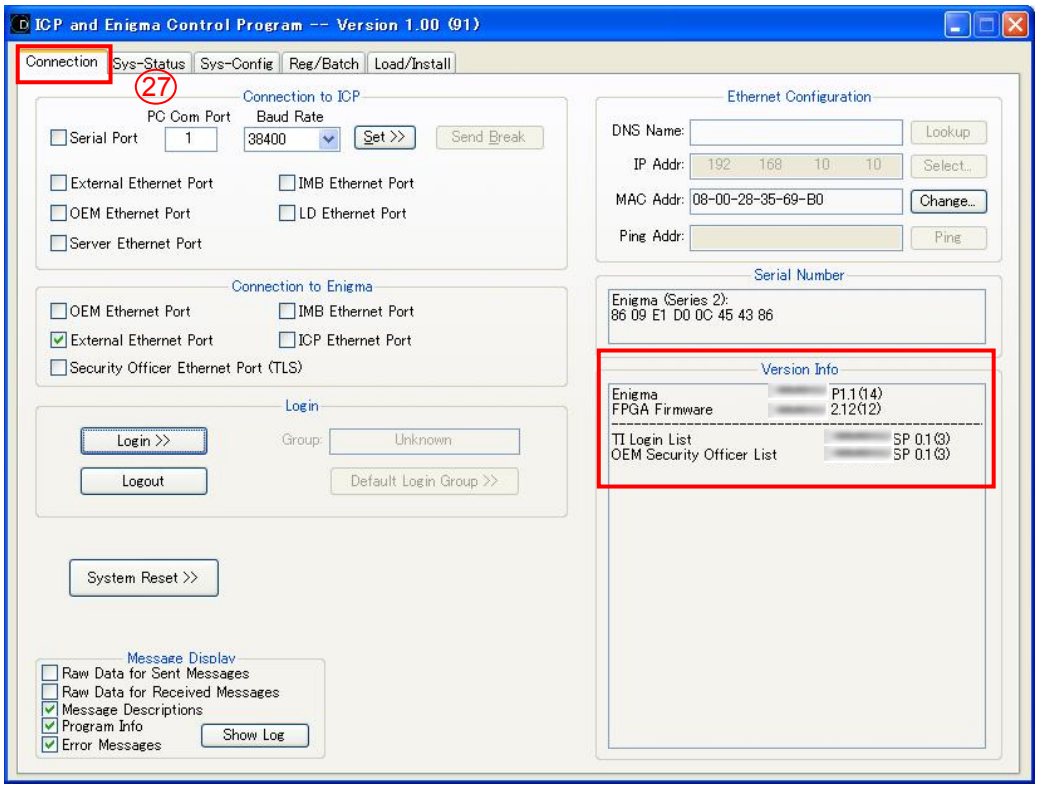

28) Press the "Load/Install" tab, and press the "Load Secure Data" button.

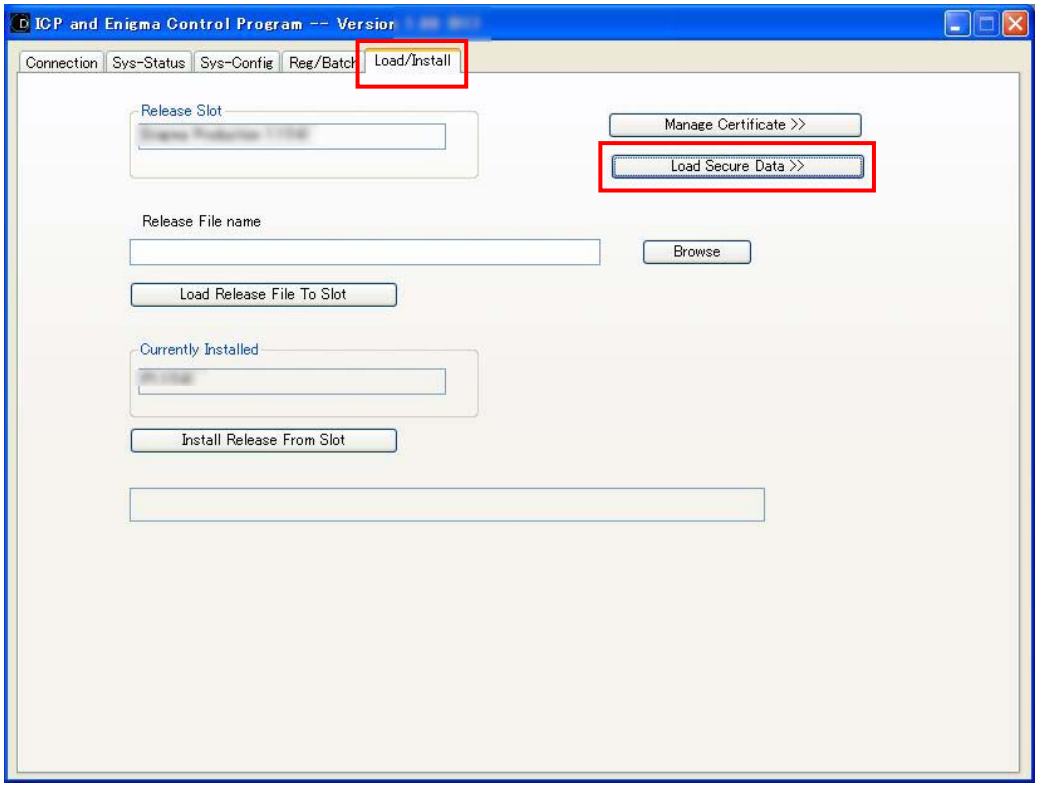

29) Select "nec_so_loginlist_*_*_*.sol" after selecting "Security Officer Login List (*.sol)" from the file type.

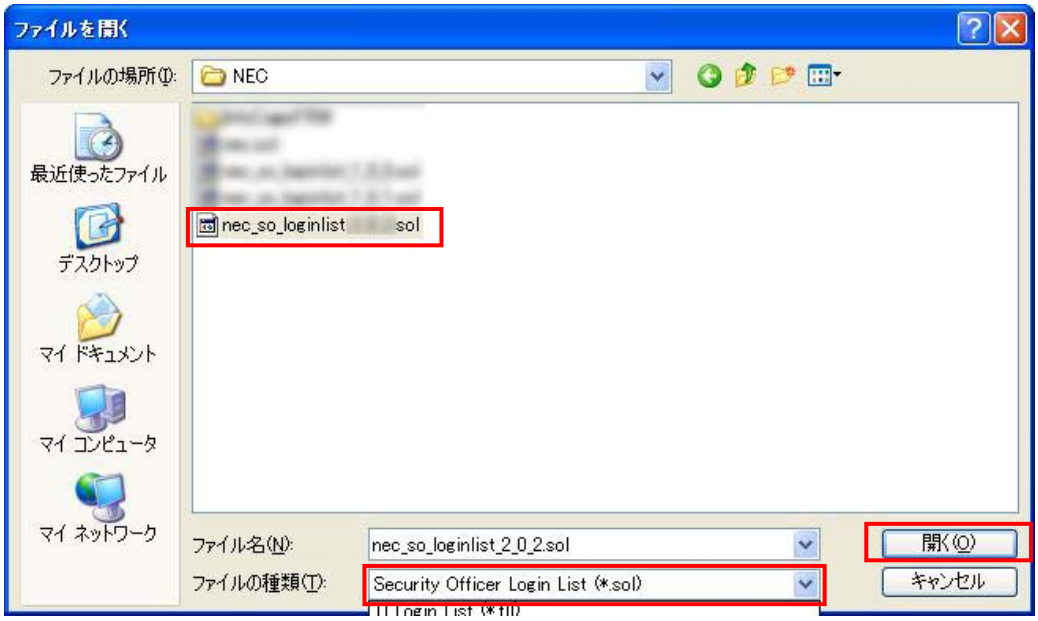

30） After the data update, check that "Secure Data Exchange succeeded" is displayed as follows.

31） Press the "Connection" tab and confirm that the version displayed in the "Version Info" window is the specified one.

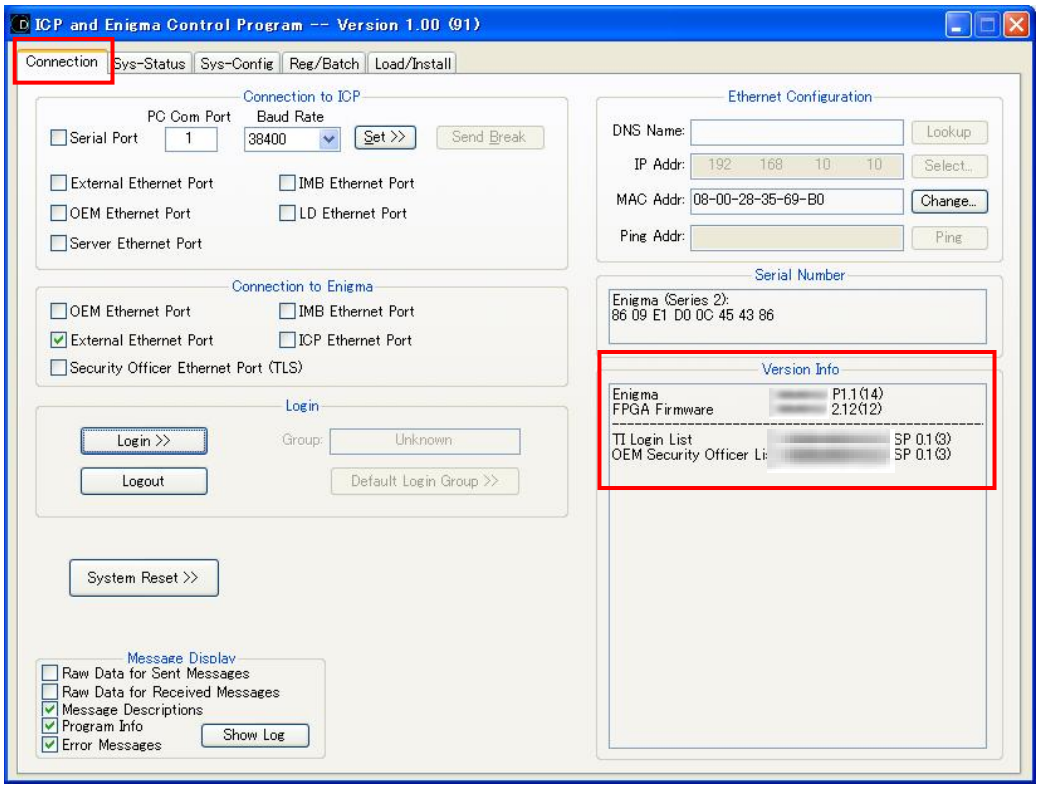

32) Turn off the power switch.

8. TI Configuration File write-in

1) Start "Digital Cinema Communicator" from PC, and turn on this unit.
2) Select the [UPDATE] tab of DCC, release the "skip MCGD Files" checkbox.
   Press Restore .

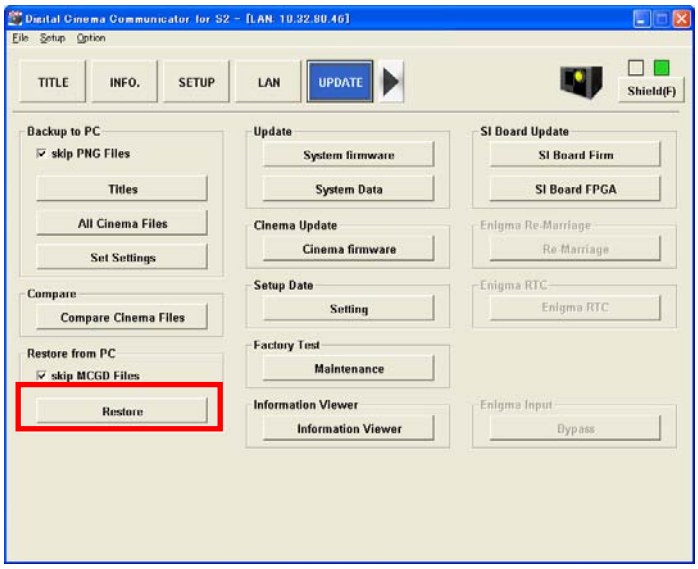

3) Select "nc20_V*FactoryC.txt (*=revision)" from the pop-up window, and press the Open button.

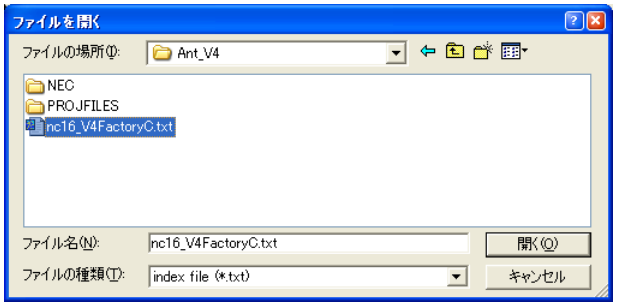

＊ This file is stored in the ICP board.
At the time of ICP board replacement, this setting has to be performed again.

9. Version check and update of the legacy interface board

9-1. Version check of the firmware/FPGA

1) Press MENU on the control panel to shift the LCD screen.
   Information > Version > System
2) Confirm that the version displayed on the LCD screen is the specified one.
   * If it is found different from the specified version, the Legacy board shall be updated according to the descriptions in the next item.

9-2. Firmware and FPGA update

1) Start the unit in standby mode.
2) Start "DCCs2.exe" from the PC.
3) Press "OK" on the communication settings window.
4) Press the "UPDATE" button, and "Firm & FPGA Update" button under "SI Board Update".

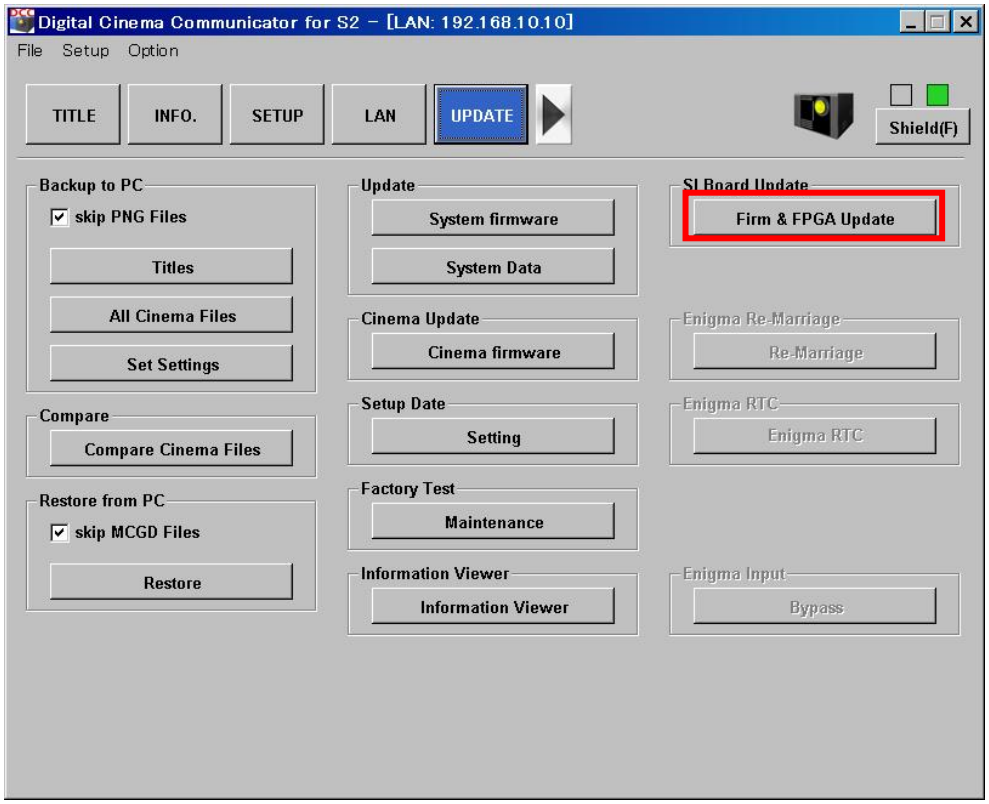

5) Select the specified file(extension=legacy) from the pop-up window, and press the Open button.

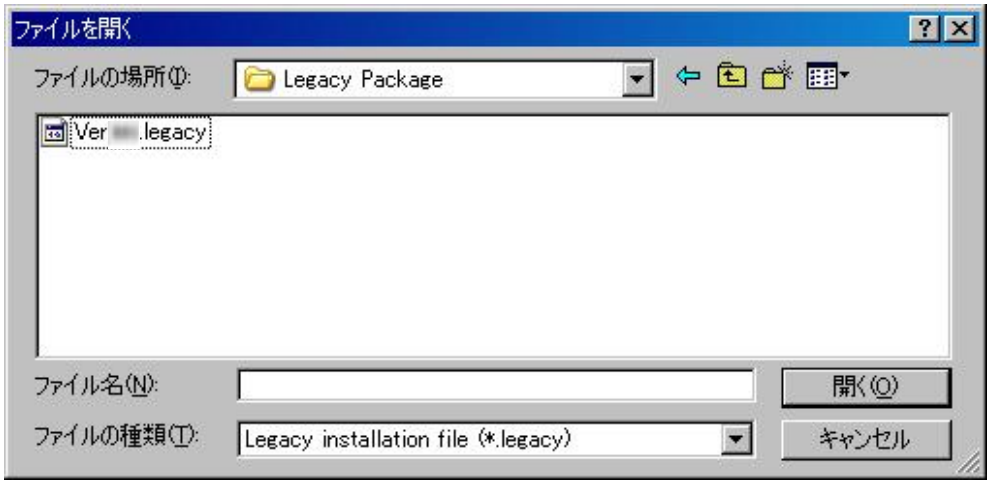

6) The following window is displayed after completing the update. Check the blue "Success" parameter is displayed in the right of "Update Result:", and press the [Exit] button.

10. Shadow adjustments (fold mirror adjustment)

∗ To stabilize the lamp output, this adjustment should be performed after the lapse of more than 5 minutes after the lamp has been lit.

1) Display “White” of the test pattern.
2) Adjust the focus.
3) Turn the Fold Mirror mounting screws (3 positions) and adjust the screen to all white to see if the periphery of the projected image is missing (shadow).
   * In the case of failure in adjustments, one side of a light yellow shadow is considered permissible even though it is up to 30mm (in the 2.7mm-wide screen).

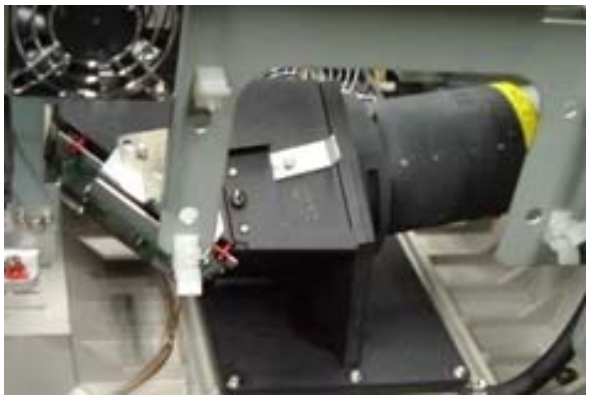

Left side surface of the projector

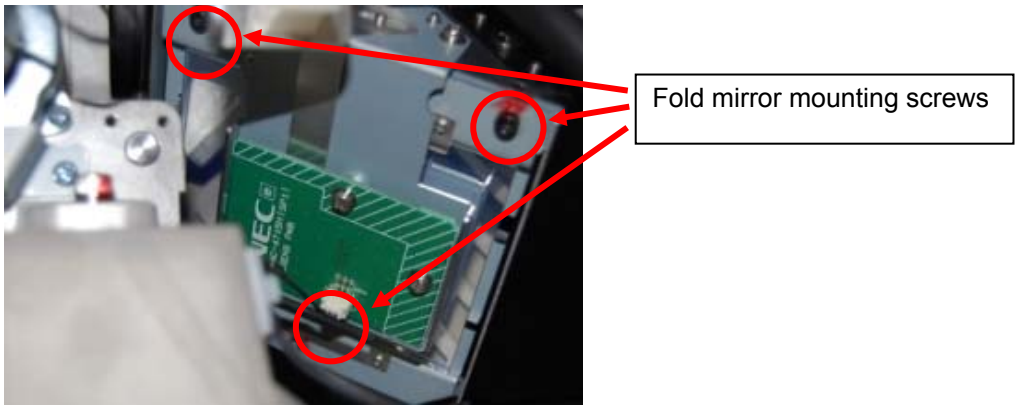

Fold mirror enlarged

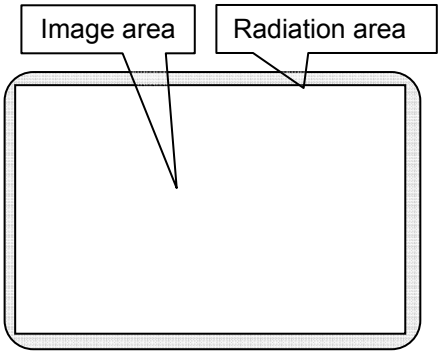

Shadow adjustment OK

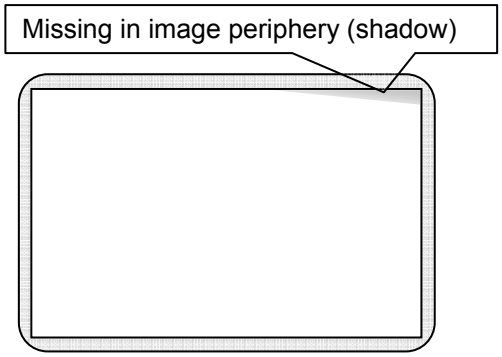

Shadow adjustment NG

4) After the completion of adjustments, fasten the fold mirror mounting screws (3 positions) after a looseness prohibition agent has been applied to them.

11. Lamp adjustment axis

∗ This adjustment should be carried out after the lamp has been lit for more than 5 minutes.

1) Remove the optical axis adjustment cover of the main-unit rear cover. (2 screws)

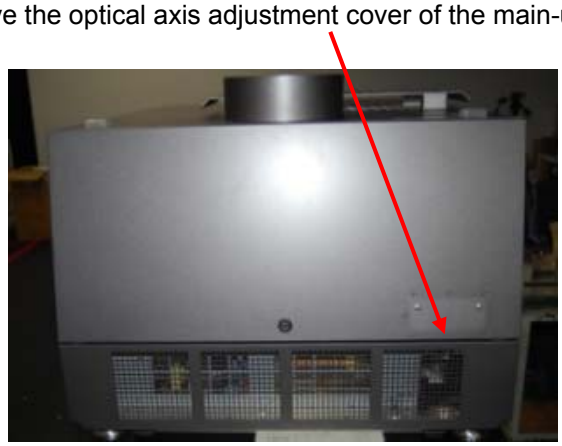

2) Put the illuminance meter in the center of the screen and turn the optical axis adjusting screw (hexagon wrench 5mm) of the lamp bulb until the indicated value comes to the maximum.
   Make adjustments in the order of Z-axis → X-axis → Y-axis → Z-axis.
   Rotate each adjusting axis by 1/4 turn.

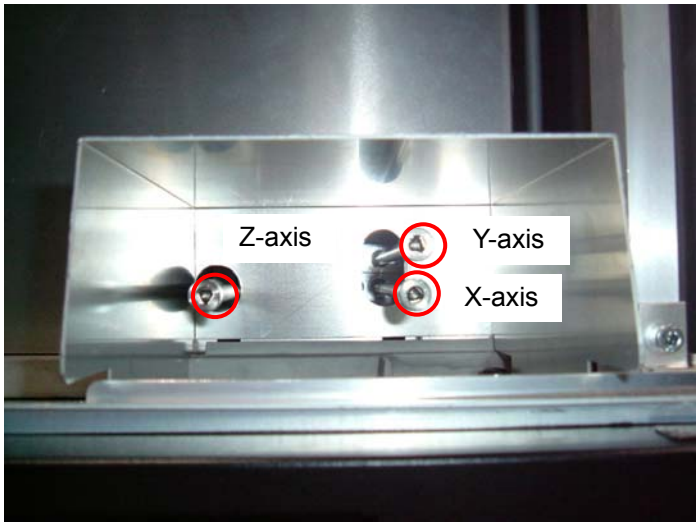

3) Install the cover.

12. Lens mount adjustments

∗ This adjustment should be carried out after the lamp has been lit for more than 5 minutes.

12-1. Lens shift limit adjustments

No adjustments required.

12-2. Focus limit adjustments

No adjustments required.

12-3. Lens mount adjustments

1) Let the lens focus gear coincide with the zoom gear marking (for 4m).

2) Remove the lock plates (2 pcs.).

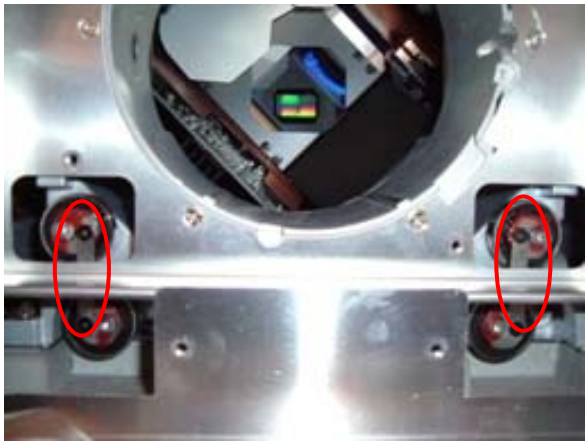

3) Make adjustments in the crosshatch screen so that there is no difference in vertical focus.
   - Turn the cam at top left so that the vertical focus point comes along the same distance from the screen. Then, fix the cam with its internal screw.
   - Turn the cam at bottom left to eliminate any clearance of the cam. Fix the cam with its internal screw.
   - Adjust the cam on the right side at the time of fine adjustments.
     (The method is the same as that for the left-side cams. Since the revolving direction is counterclockwise, however, it is reversed at the time of fixing. Caution required.)
   - For example, when the lower focus comes toward you, the mount should be positioned to face upwards. (At that time, the screen moves downwards.)
   - Adjustments should be carried out so that the vertical focus point is kept within 90mm and the vertical difference is kept within 45mm.

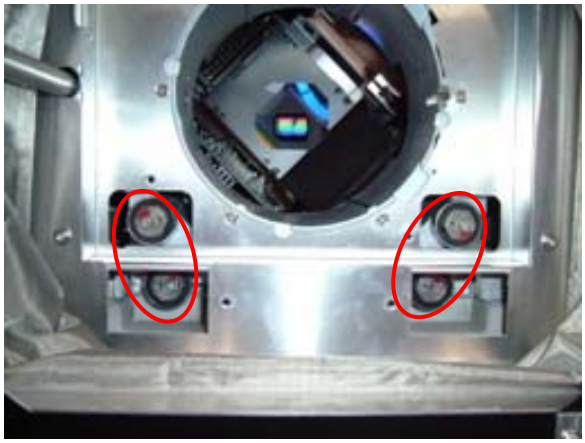

4) Loosen the mount fixing screws (M5, 4 pcs.).

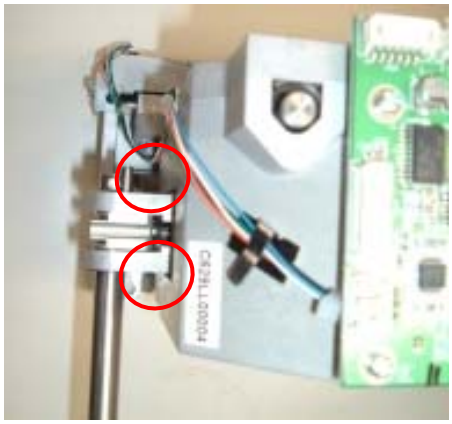

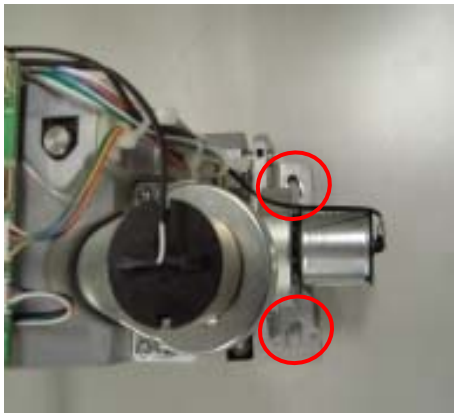

5) Turn it by means of a jig so that the horizontal focus point is kept within 120 mm and the horizontal difference is kept within 45 mm.
For example, when the right side comes toward you, turn it so that the screen is faced to the right.

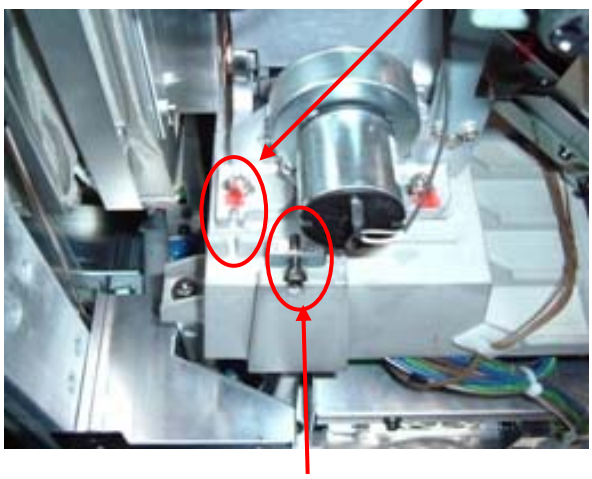

6) Move Z-axis adjusting metal fittings to the center focus in front of the screen.
Adjust the center focus to the best in front of the screen (to be specified separately).
7) Tighten the mount fixing screws (M5, 4 pcs.).
Check whether any deviation is present in horizontal, vertical, and Z-axis focus.
If any deviation is found, make relevant adjustments.
8) Move the image center to the screen center by means of the lens shift feature.
9) Install the lock plate.
10) Apply a looseness prohibition agent to the respective fixing screws of the cam, the lock plate, and the mount.

13. Color setting

∗ This adjustment should be carried out after the lamp has been lit for more than 5 minutes.

1) Start "Digital Cinema Communicator" from the PC.
2) Color setting
   ① Press the [▶] button.
   ② Press the [SETUP] button.
   ③ Press the [Color Setting] button.

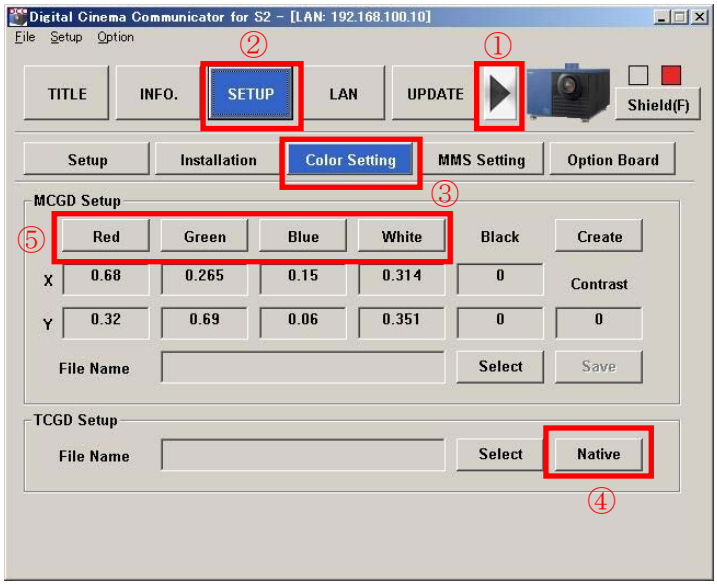

3) Native color measurement
   ④ Press the [Native] button.
   ⑤ Press the [Red] button, measure the X- and Y-values with the colorimeter.
   ⑥ Similar measurements shall be carried out for [Green], [Blue], and [White].

   * The measuring point stays in the screen center.

4) Write the measured values in the "Value" field of the excel file for result judgment.
5) Confirm that "Pass" is displayed in all the "Result" items. (Except for White)

* If the standard values cannot be attained, make re-adjustments according to the “Notch Filter Adjustment” item.

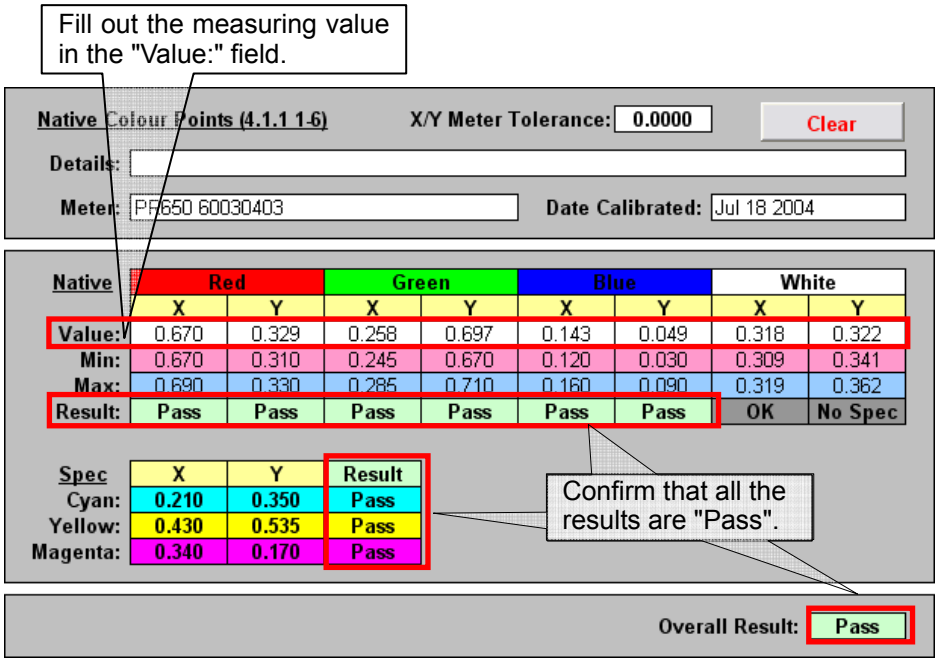

Standard value of Native Color

	Red	Green	Blue
x	0.680±0.010	0.265±0.020	0.140±0.020
y	0.320±0.010	0.690±0.020	0.050±0.030

Standard value of Cyan/Yellow/Magenta

	Cyan	Yellow	Magenta
x	0.210	0.430	0.340
y	0.350	0.535	0.170

6) Control these data.

7) Creation of MCGD (Measured Color Gamut Data) data

① Press the Create button.

② Press the Red button.

③ Enter the measured values of Item 3) in the Red (x, y) window.
In the same manner as for Red, enter inputs of Green, Blue, and White.

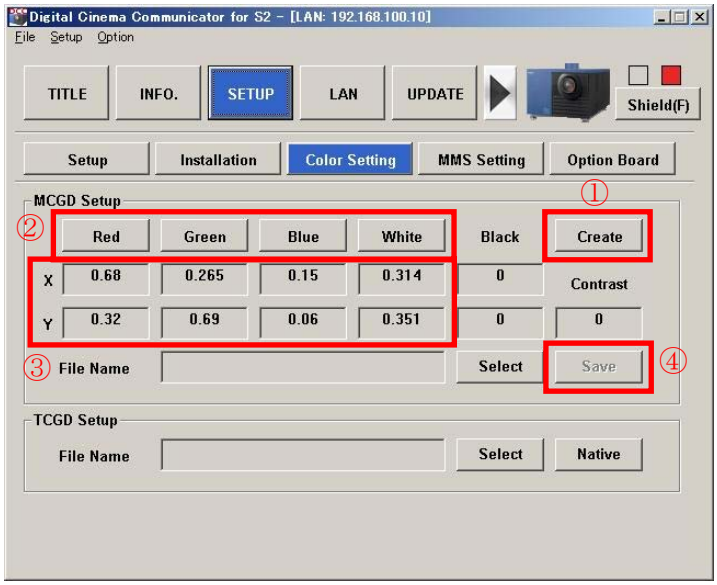

④ After the measured value inputs of all colors have been entered, press the Save button to overwrite (save) these values in "M101" file.

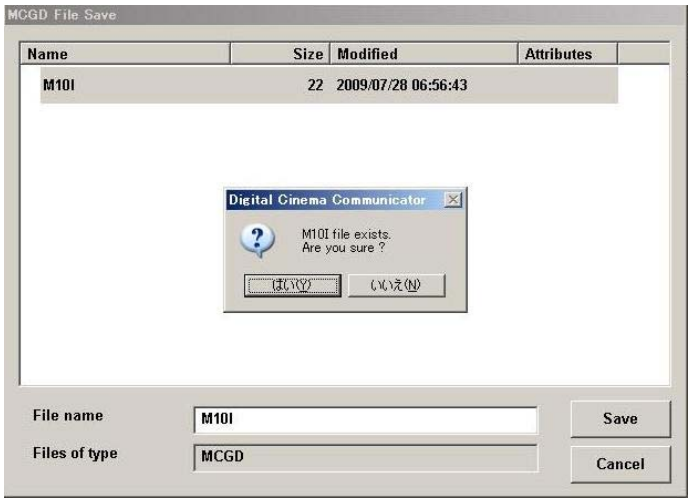

Notch filter adjustment

1) Remove the side panel of the right side.

2) Remove the tank and fix it as shown below.

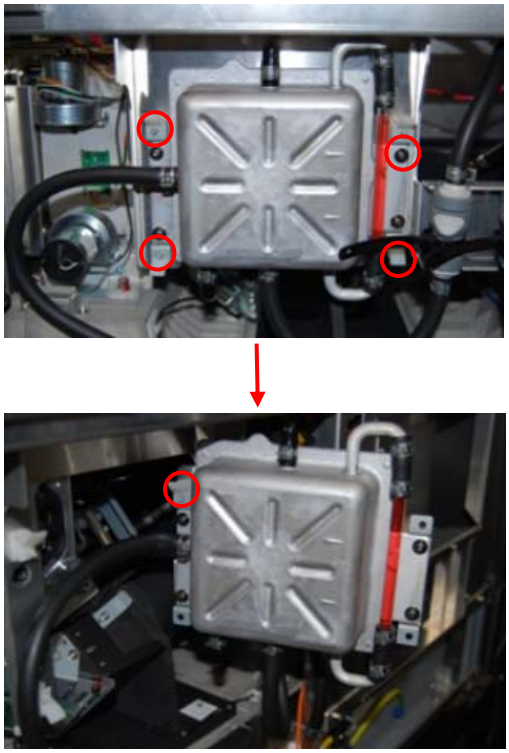

3) Loosen the optical engine screw.

4) Adjust the notch filter angle.

∗ The standard mounting position is that the round marks of the optical engine can be seen, 3 each at the top and bottom respectively, and the angle is 5 degrees.

・ When this positioning is tilted to make one round mark disappear, the angle is moved by 5 degrees.

・ If the positioning is tilted upwards as illustrated, the angle is increased. If it is tilted downwards, the angle is decreased.

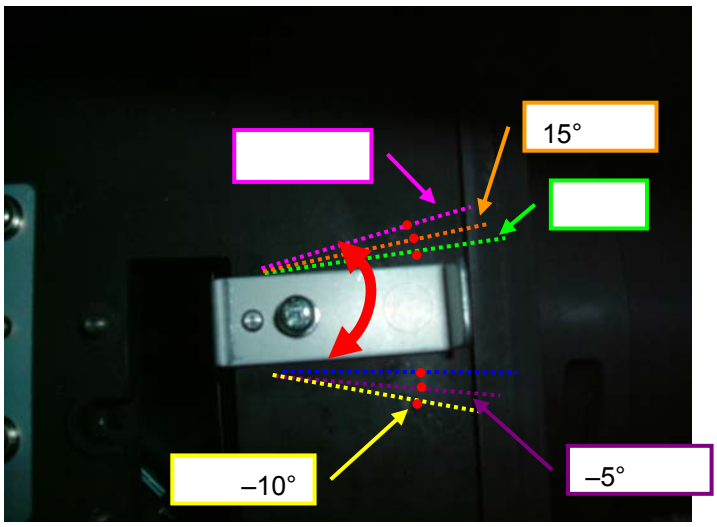

∗ If the measured values of x and y Native for R, G, and B deviate from the standard, change the angle of the notch filter and make adjustments until the values are kept within the standard range.

Example) When the x value of R is 0.670 or below, tilting should be 0 degree.
When the y value of R is 0.330 or below, tilting should be 0 degree.
When the x value of G is 0.285 or below, tilting should be 10 - 20 degrees.

5） Tighten the screw that has been loosened as per Item 3. (Tightening torque: 5 - 7kgf·cm)
Apply a looseness prohibition agent to the screw.

6） Mount the parts in the order of Step 2 → 1.
Install them at the specified torque indicated on the assembly diagram.

7） Measure the R.G.B values again in Native mode and confirm that all the x and y values meet the standard requirements.

14. Light sensor adjustment

This adjustment should be carried out after the lamp has been lit for more than 5 minutes.

1) Display "100%White" of the test pattern.
2) Increase the lamp output to the maximum (4000W).
3) Start "Digital Cinema Communicator" from the PC.
4) Press LAMP >> Setup and press the Execute button under "Bulb Alignment".

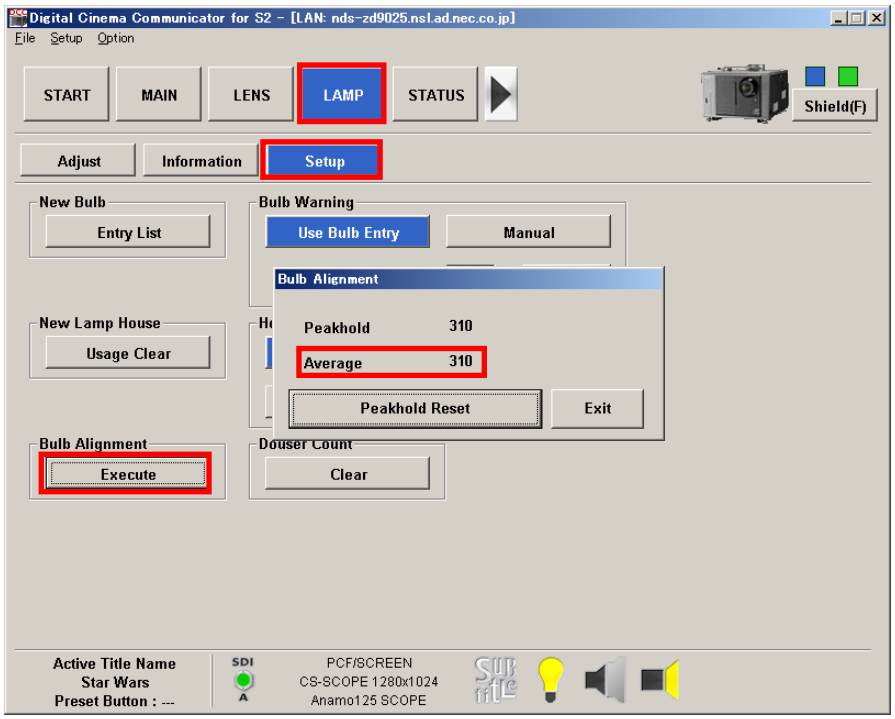

5) Loosen the fixing screw of the Sensor PWB and adjust its position where the average value of the LCD screen becomes maximum between 1000 - 1800.
   If the value is less than 1000, readjustments are required.
6) After adjustments, tighten the screw and apply a looseness prohibition agent to it.

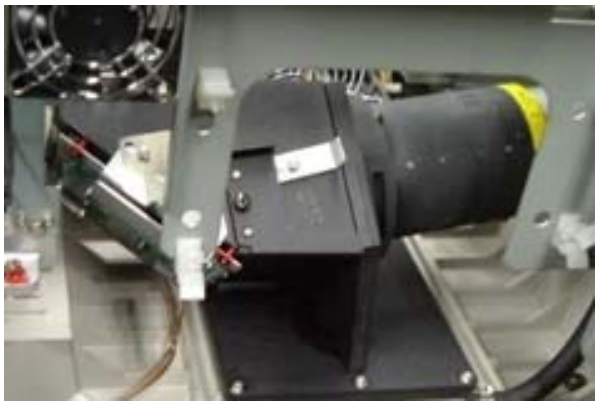

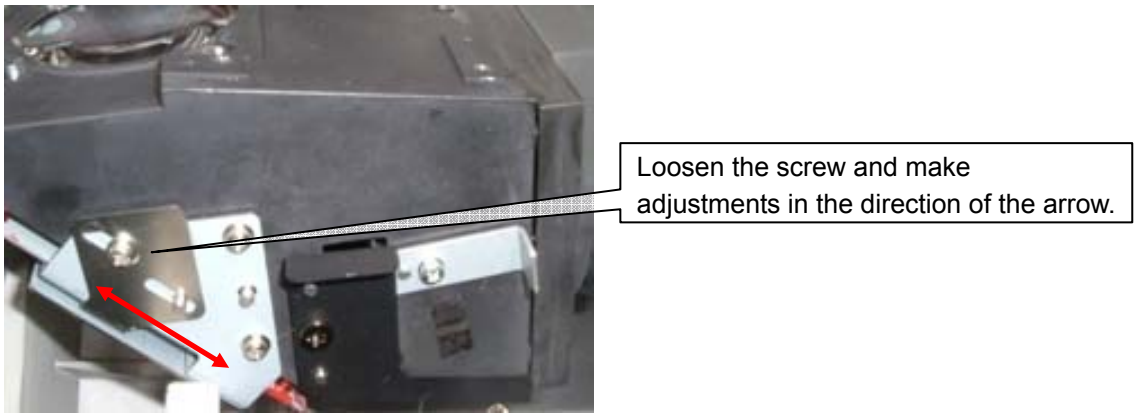

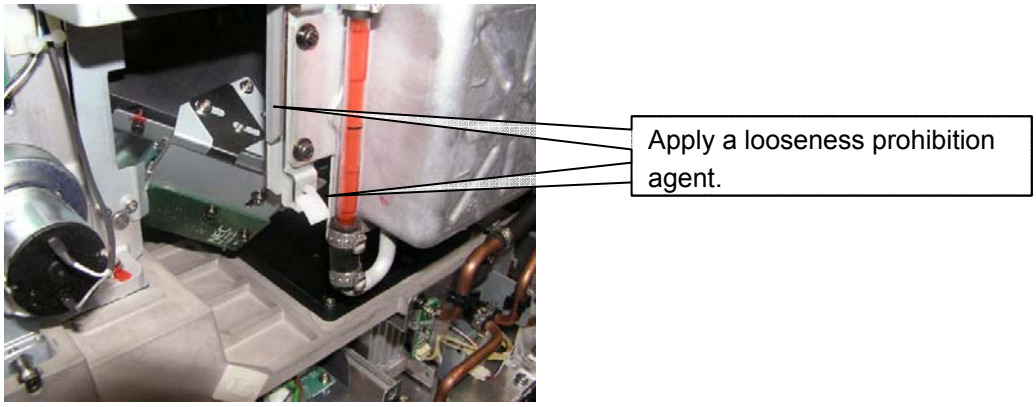

7） Confirm that the average value displayed in the LCD is changed in synchronization with the lamp output when this lamp output [%] is changed (up or down) from the digital cinema communicator.

15. Lens mount setup check

Confirm that the dip switch (SW100) of the board installed on the lens mount is duly set up as illustrated below.

* If any difference is perceived, the setup conditions have to be modified.

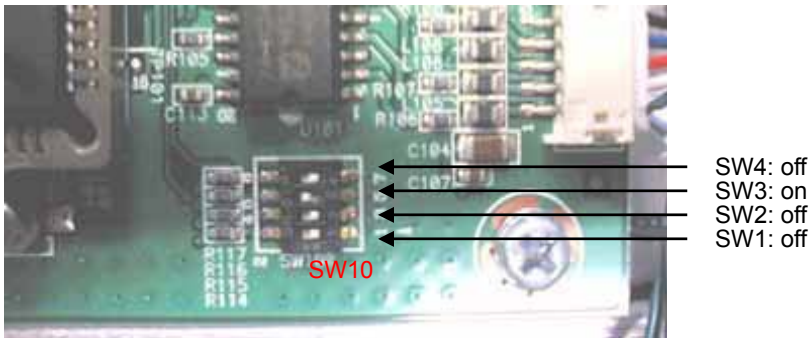

16. Adjustment of the lens zero position and the shift range

16-1. Version check

1) Start "Digital Cinema Communicator" from the PC.
2) Press the LENS button and confirm that the lens firmware is the specified version.

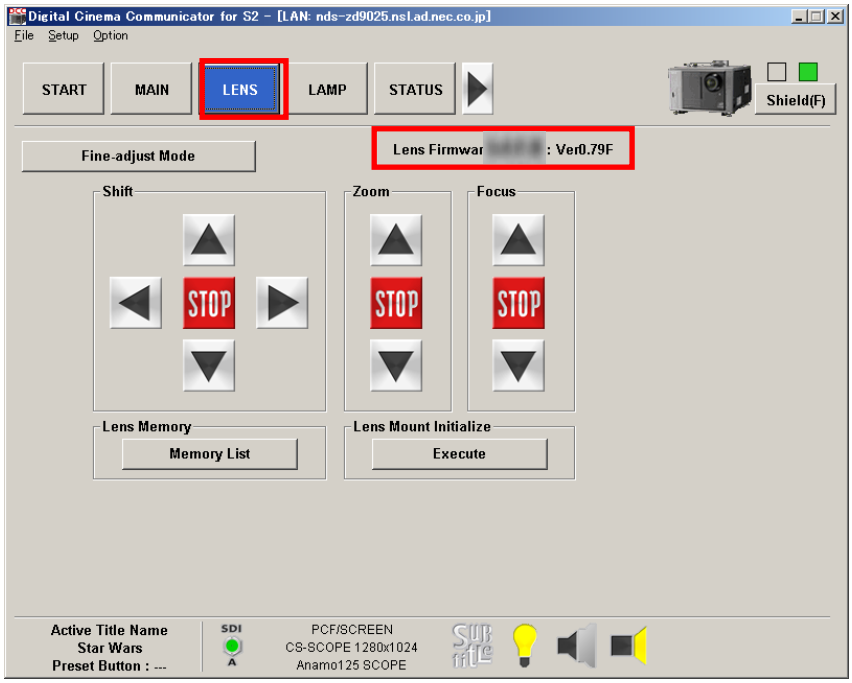

If any difference is perceived, replace the lens mount.

16-2. Lens adjustment

1) Start "Lens Calibration tool" from the PC.
2) Select "Cross Hatch" of the test pattern.
3) Using the "Lens Shift" feature, adjust the projector screen to the center position of the screen.
4) Press "Calibration Center". (①)
5) Move the lens at the upper-left position (0.13H/257mm, 0.34V/355mm).
6) Press "Calibration LeftUpper". (②)
7) Move the lens at the lower-right position (-0.13H/257mm, -0.34V/355mm).
8) Press "Calibration RightLower". (③)
9) Press "Write Calibration Value". (④)

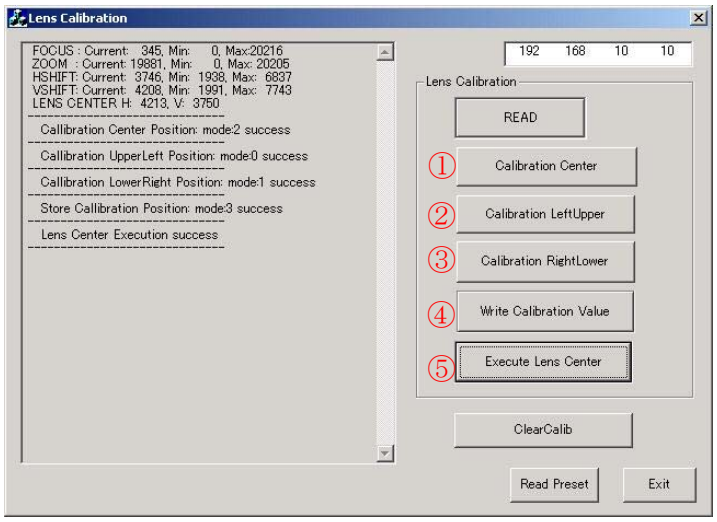

16-3. Setup data check

1) Select "Cross Hatch" of the test pattern.
2) Using the "Lens Shift" feature (Up, Down, Right, Left), move the projected image to any position.

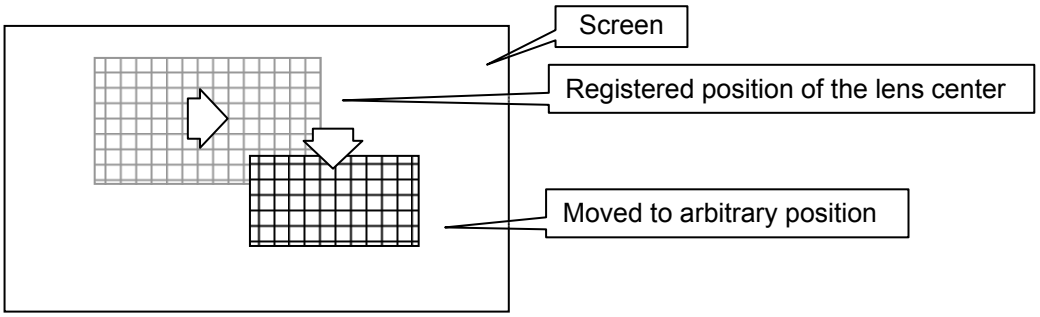

3) Press MENU on the control panel to shift the LCD screen.
   Press Configuration > Installation > Lens Center ENTER and confirm that the image center is returned to the screen center.

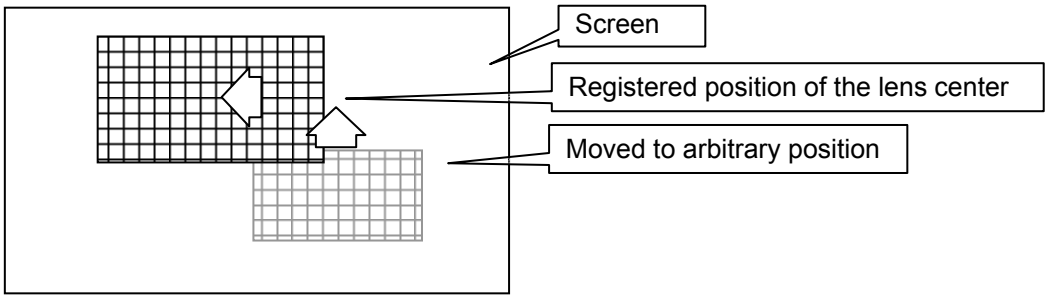

17. Cold Mirror Adjustments

Warnings !!

Always wear the correct protective clothing for when working with UV light.
Eye and skin protection must be warn.

Even with protective eye wear and clothing do not look directly in to, or place anything in to, the light path as serious harm may be caused as a result.

Never work with the lamp door open and the lamp ignited. When working with the lamp door open full protection must warn to protect against lamp implosion.

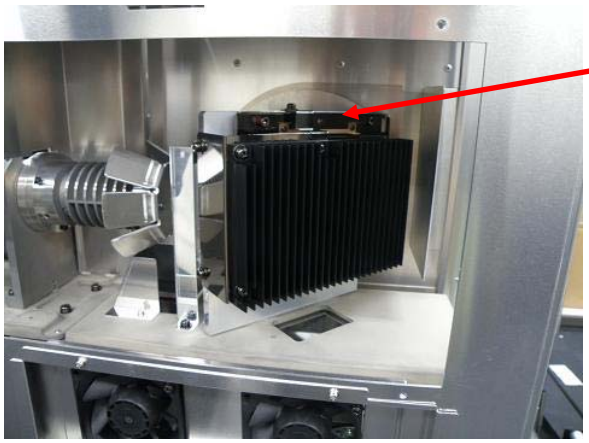

Do not look directly in to the lamp

Unscrew the four screws holding the cold mirror cover.

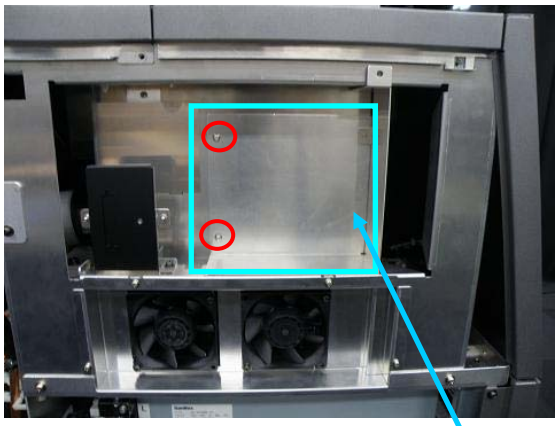

NC2000C with left side rear with cover removed

Adjustment area

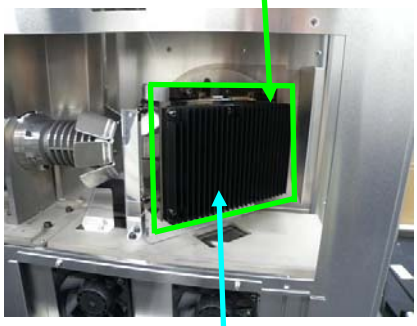

Cold mirror assembly

Cold mirror and light rod cover

17-1. Cold Mirror Adjustment (Brightness and Colour Uniformity)

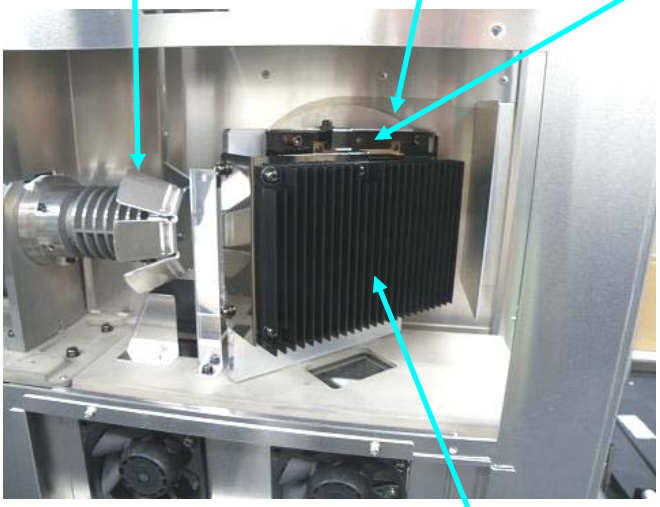

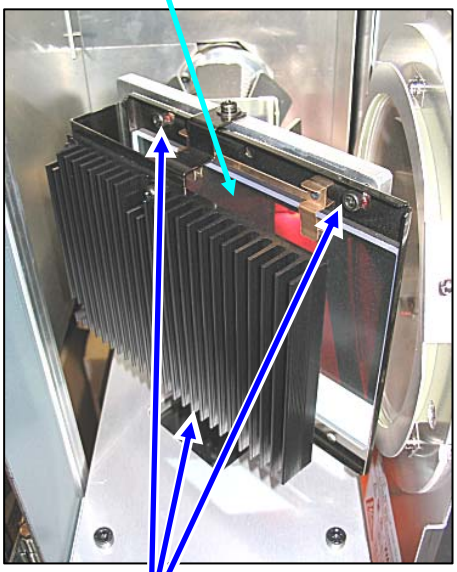

Warning !!
Make adjustments to the cold mirror from the side of the projector not through the lamp door.

17-2. Cold Mirror Adjustment Points (Brightness/Colour Uniformity)

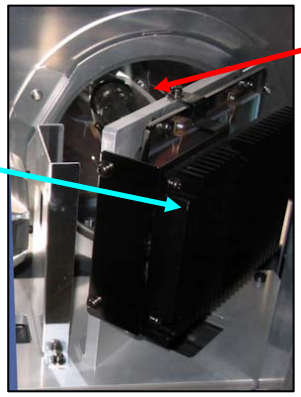

Do not look directly in to the lamp

Cold mirror can be adjusted with the heat sink still attach. Diagram below has the heat sink removed to be able to see the adjustment points.

White screen and adjustment areas of the image

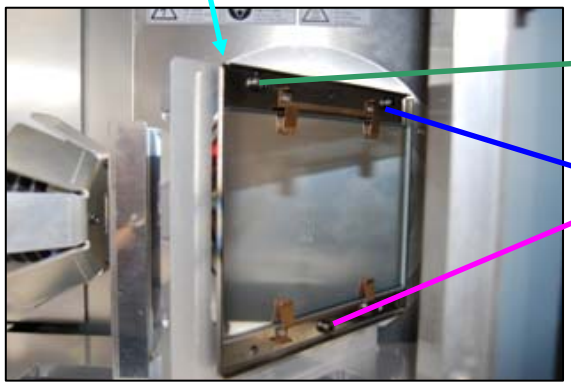

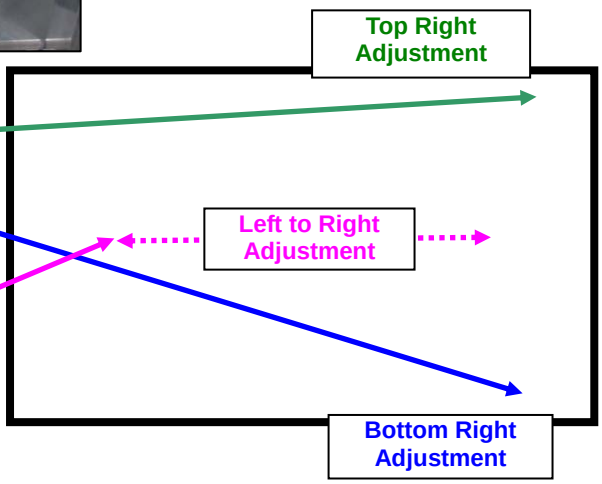

Contents

I. Application

Confirmation Items for the DLP Cinema Projector NC2000C

Caution: The projector interior contains an AC primary live section and a high voltage section. If you have to access the equipment interior, utmost care is needed.

II. Standard confirmation

This confirmation program shall be executed after the lapse of at least 2 hours after the completion of aging.

* During the aging process, select the Test Pattern "White 50 [IRE]".
Prior to execution, the specified USB memory shall be inserted in the USB terminal of the projector.

AC power input

- C1 connection (1 power cable)
  The power is supplied from the wired terminal board to the Set and Ballast sides in common.
  Single phase AC input power source: 200 - 240 V AC, 50/60 Hz
  * If there is no designation, follow the C1 connection.

- C2 connection (2 power cables)
  The power is supplied from the general AC inlet to the Set side and from the wired terminal board to the Ballast side.
  Set side : Single phase AC input power source: 100 - 240 V AC, 50/60 Hz
  Ballast side : Single phase AC input power source: 200 - 240 V AC, 50/60 Hz

  Caution) Confirm the items below, without fail, before turning the power ON.
  - A single-phase AC power cable is correctly connected.
  - The lamp bulb is correctly installed.

* Refer to the following about the C1/ C2 connection method.

① C1 connection
The power is supplied from the wired terminal board to the Set and Ballast sides in common.
Connect Cable "1" to "A" of the ACS PWB.
Connect Cable "2" to "B" of the ACS PWB.
Attach the Live, Neutral, and GND cables to the wired terminal board.

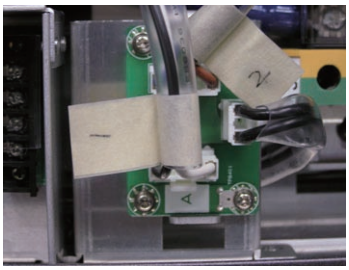

② C2 connection
The power is supplied from AC inlet to the Set side and from the wired terminal board to the Ballast side.
Connect Cable "1" to "B" of the ACS PWB.
Connect Cable "2" to "C" of the ACS PWB.
Attach cables to the wired terminal board in the same manner as for ① above.
Connect a general AC cable to the general AC inlet.

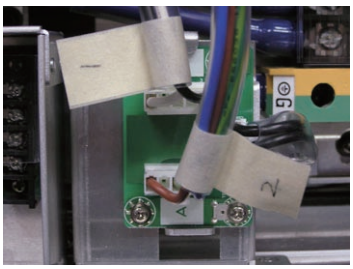

1. Input signal

1-1. DVI input

DVI-D standard, 24-pin (TMDS method)

Port Protocol	Source Forma	Vertical Rate	Clock Rate	Scan Type	Color Space
DDWG	2048 x 1080	60 [Hz]	162 [MHz]	Progressive	RGB

1-2. HDSDI input

HD-SDI signal SMPTE292M

Port Protocol	Source Forma	Vertical Rate	Scan Type	Color Space
SMPTE 274M	1920 x 1080	24 / 23.98 [Hz	Progressive	YPbPr

1-3.Registered title list

Macro Key	Title Name	Input Terminal	Anamorphic Turret
1	SDI A	SDI - A	OFF
2	SDI B	SDI - B	OFF
3	SDI C	SDI - C	OFF
4	SDI D	SDI - D	OFF
5	DVI A	DVI - A	OFF
6	DVI B	DVI - B	OFF
7	CrossHatch	Internal	OFF
8	Alignment	Internal	OFF
9	White100	Internal	OFF
–	Black	Internal	OFF
–	3D TEST SDI AB	SDI-A&B DUAL	OFF
–	SDI A W-ANAMO	SDI - A	ON
–	MMS SLOT1 DVI	MM-Slot1-DVI	OFF

2. Devices used

Primary lens	:	NC-60LS13M
RGB signal generato	:	AstroDesign VG-828D or equivalent (w/HDCP)
HD-SDI signal generator	:	Physical specifications SMPTE292M Standard 274M / RP211 or equivalent
Cable	:	LAN : Category 5E or better RS232C Serial : Straight BNC: BNC : 5C-FV or equivalent DVI : DVI-D 2m (Code: 73893286) or equivalent
Illuminance meter	:	KONICA MINOLTA CL-200/ T -10
Multi-spectrophotometer	:	Photo Research PR-650
Digital multi meter		
Screen	:	White Mat (Gain1.0)
Lamp	:	NC-16LP401
USB memory		
Remote controller (REM-T HAND UNIT RD-371E: 7N900124 or equivalent)		
PC (including Application Program, Data)		

3. Conditions

The confirmation steps shall be followed in the installation conditions illustrated below.
The lens to be used shall be of the NC-60LS13Z and installed for 0°projection.

The relationship between foot and optical axis

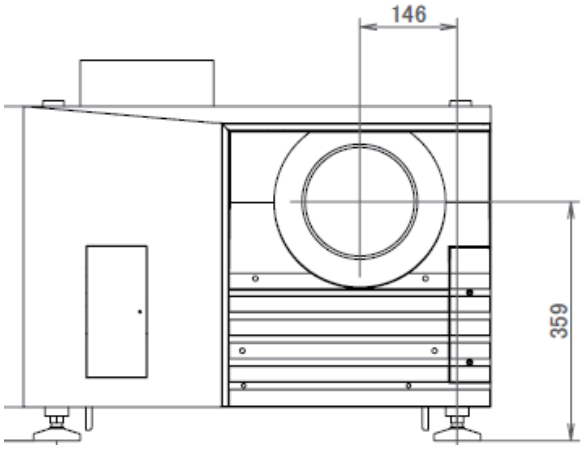

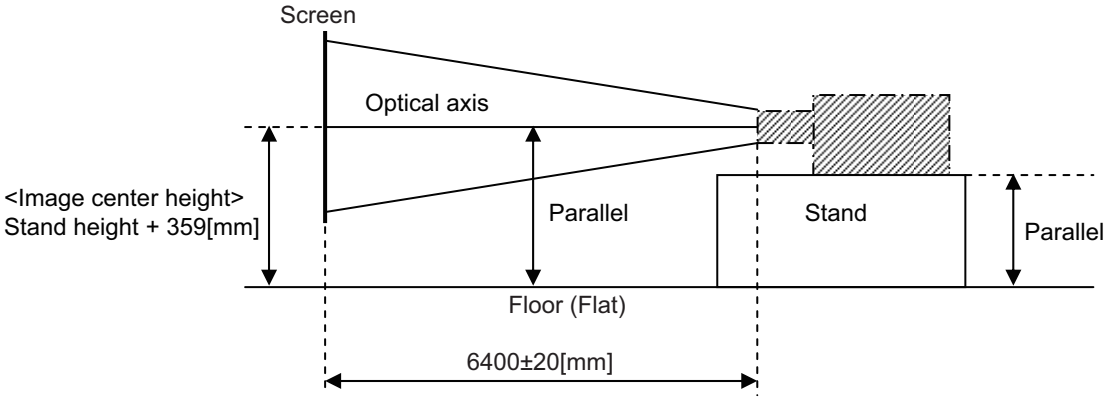

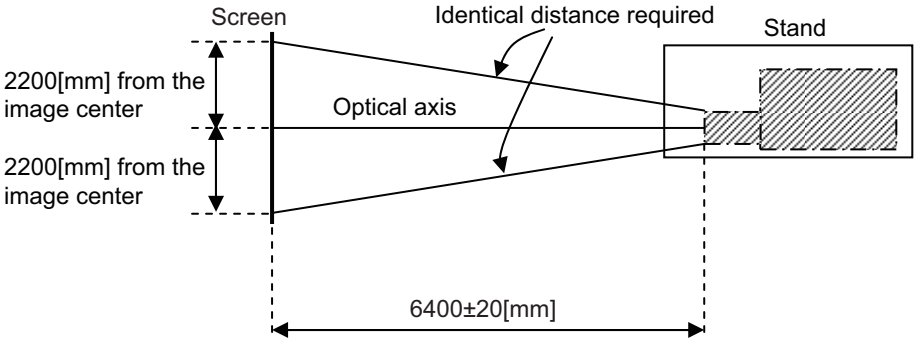

<TOP VIEW>

III. Confirmation items

1. Visual checks

1) Wire connectors and cables located inside the projector shall not be bent forcibly or pressed against sharp edges.
2) The lamp house setscrews and the lamp door shall be installed assuredly.

2. Protector operation check

2-1. Standby checks

1) Lamp door

When the lamp door is opened, the conditions specified below shall be assumed.

Item	Status or display
POWER LED	Lights in white
REAR STATUS LED(L/R)	Blinks in red
LCD Display	Lamp Door Open
Buzzer	Continuous sound
POWER ON:	Prohibited

2) Inter lock check

When the short-jumper of the interlock terminal is removed, the conditions specified below shall be assumed.

Item	Status or display
POWER LED	Lights in white
REAR STATUS LED(L/R)	Blinks in red
LCD Display	Inter Lock Fail
Buzzer	Continuous sound
POWER ON:	Prohibited

3) Temperature sensor

* Since these checks have to be carried out with the main unit in cold state before the lamp is lit, they should be programmed before [CPU board version check and update].
If these checks are carried out after the lamp has been lit, it is necessary to wait for more than 4 hours after the lamp is unlit.

① Start "Digital Cinema Communicator", and connect the projector.

② Press the buttons in the order of [INFO.] → [Log] → [System Status].

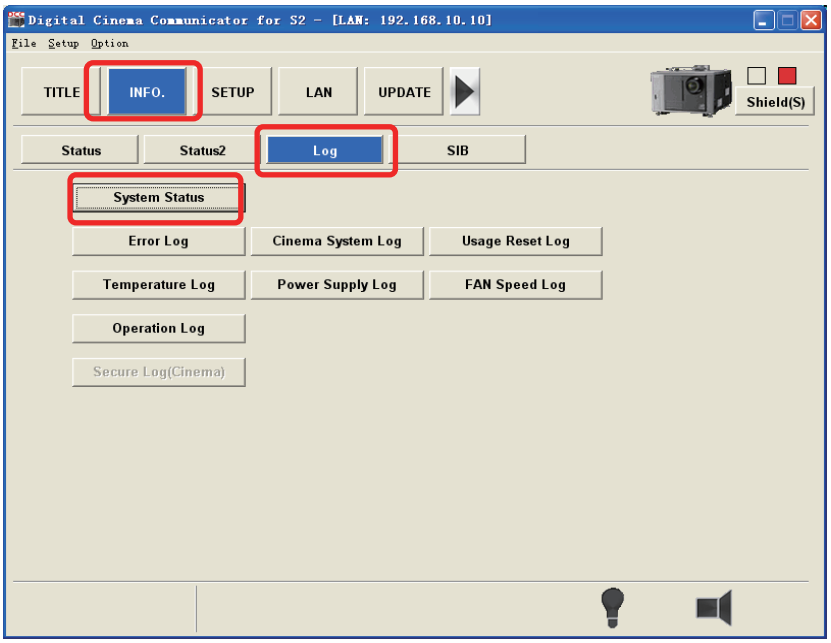

③ Temperature at each part is displayed at the [Temperature] tab.

④ Confirm that the current temperature displayed at the outside air is room temperature ± 5 [°C].

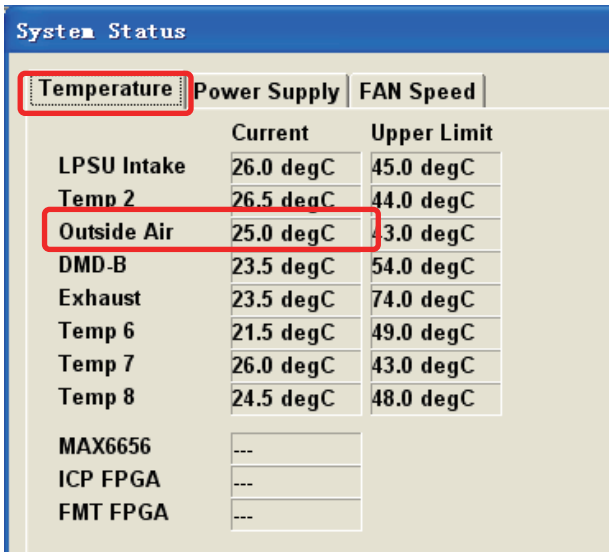

[degC] = [°C]

⑤ If the temperature sensor is faulty, "Error" is displayed as illustrated below.

* For the sections where the DCC sensor position is not displayed, refer to the comparison table for sensor positions shown below.

	Current	Upper Limit
LPSU Intake	26.0 degC	45.0 degC
Temp 2	26.0 degC	44.0 degC
Outside Air	25.5 degC	43.0 degC
DMD-B	Error	54.0 degC
Exhaust	23.0 degC	74.0 degC
Temp 6	21.5 degC	49.0 degC
Temp 7	26.0 degC	43.0 degC
Temp 8	24.5 degC	48.0 degC

DCC indication	Sensor position
LPSU Intake	Temperature inside the projector
Temp2	Intake temperature (Lamp fan)
Outside Air	Temperature outside the projector
DMD-B	DMD B-ch temperature
Exhaust	Temperature inside the exhaust duct
Temp6	Intake temperature (Cold mirror)
Temp7	Intake temperature (Shield box)
Temp8	Intake temperature (Radiator)

Comparison table for sensor positions

4) Thermostat checks

When the thermostat relay connector is pulled out, the conditions displayed in the table below shall be assumed.

Item	Status or display
POWER LED	Lights in white
REAR STATUS LED(L/R)	Blinks in red
LCD Display	Lamp Over Temp
Buzzer	Continuous sound
POWER ON:	Prohibited

2-2. Checks with the power ON

FAN Stop

Turn the power OFF and pull out any one of the fan relay connectors FAN0 - FAN5. (Do not pull out FAN6.)

After the power is ON with the lamp left unlit, the condition shall move to the state of cooling. In addition, the conditions in the table below shall be assumed.

Item	Status or display
POWER LED	Blinks in green> Lights in white
REAR STATUS LED(L/R)	Blinks in red
LCD Display	Fan * Stop
Buzzer	Continuous sound

* It denotes Fan No. pulled out of the board.

After the completion of checks, turn the power OFF and return the fan relay connector to its original position.

Confirm again that there is no error when the power is turned ON.

3. Lamp lighting checks

Confirm more than twice that the lamp is lit normally.

4. Overall checks

4-1. Enigma board charge checks

* The charging day for the enigma board shall be set within 30 days (the label stuck to the set history sheet).
  If more than 30 days have passed already, follow the charging steps according to the table below.

[Caution] Handling for set inventory

If the date of set shipment exceeds 30 days after the final charging day for the enigma board, similarly follow the charging steps according to the table below before shipment.

Lapse of days after final charging	Recharge time required
30 days or more	10H
60 days or more	20H
90 days or more	30H
120 days or more	40H
150 days or more	50H
180 days or more	60H

4-2. Tamper switch (5 pcs.) operation checks

Checks for 1) - 5) below shall be carried out in the standby state.

1) Side panel (L)

① Remove the side panel (L).
② Start "Digital Cinema Communicator".
③ Press the [INFO.] button, and check that the following is displayed in the "Error" window.
"Tamper Fail(0)"
* If no indication is displayed, press the [INFO.] button again.
④ Mount the side panel (L).
⑤ Press the [INFO] button of "Digital Cinema Communicator" again and confirm that "There are no errors" is displayed for Item ③.

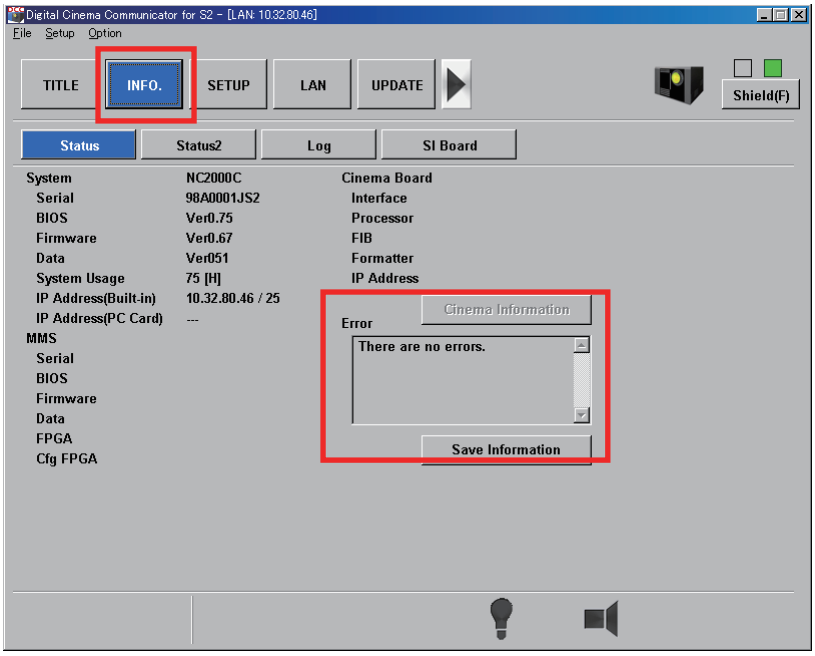

2) Side panel (R)

① Remove the side panel (R).
② Start "Digital Cinema Communicator".
③ Press the [INFO.] button, and check that the following is displayed in the "Error" window.
"Tamper Fail(2)"
* If no indication is displayed, press the [INFO.] button again.
④ Mount the side panel (R).
⑤ Press the [INFO] button of "Digital Cinema Communicator" again and confirm that "There are no errors" is displayed for Item ③.

3) Lens mounting bracket

① Remove the lens mounting bracket.

② Start "Digital Cinema Communicator".

③ Press the [INFO.] button, and check that the following is displayed in the "Error" window.

"Tamper Fail(3)"

* If no indication is displayed, press the [INFO.] button again.

④ Mount the lens mounting bracket.

⑤ Press the [INFO] button of "Digital Cinema Communicator" again and confirm that "There are no errors" is displayed for Item ③ .

4) Electric box

* Functional checks of switches are also acceptable in the state of CASE TI Sassy.

① Remove the electric box.

② Start "Digital Cinema Communicator".

③ Press the [INFO.] button, and check that the following is displayed in the "Error" window.

"Marrige Tamper Fail (0)"

* If no indication is displayed, press the [INFO.] button again.

④ Mount the electric box.

⑤ Press the [INFO] button of "Digital Cinema Communicator" again and confirm that "There are no errors" is displayed for Item ③.

5) Option slo

① Turn off the AC switch of the main unit.

② Remove the option slot.

Remove these in the order of Side panel (L) → Lower stage option slot board.

③ Start "Digital Cinema Communicator".

④ Press the [INFO.] button, and check that the following is displayed in the "Error" window.

"Marrige Tamper Fail(1)"

* If no indication is displayed, press the [INFO.] button again.

⑤ Mount the option slot.

⑥ Press the [INFO] button of "Digital Cinema Communicator" again and confirm that "There are no errors" is displayed for Item ③.

4-3. Re-marriage operation checks

① Power ON (Lamp lighting not required)

② Start "Digital Cinema Communicator".

③ Press the [INFO.] button, and check that the following massages are displayed in the "Error" window.

Physical Marriage Tamper
Marriage NOT Active

* If an error message of [Service Door Tamper] is displayed, however, wait for 5 seconds and retry this check again.

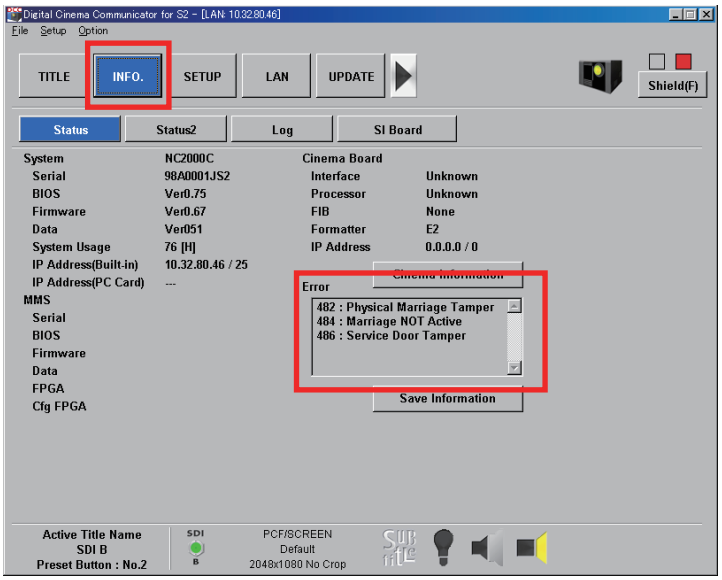

④ Press the [SETUP] button.

⑤ Press the [Re-Marriage] button.

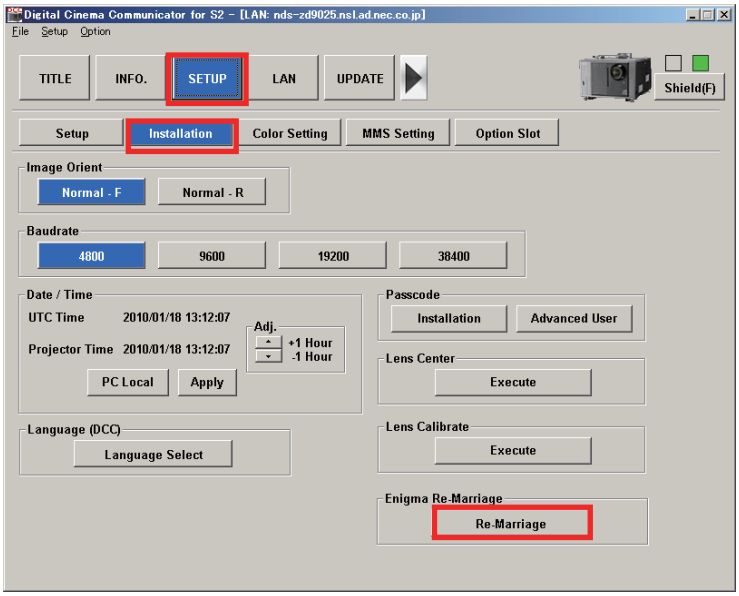

⑥ Confirm that the screen below is displayed and re-marriage is performed.
Press the [OK] button to close the window after confirmation.

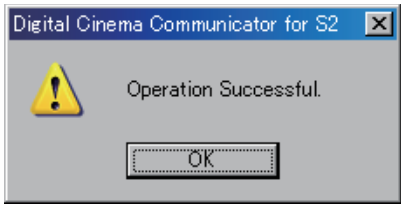

In the case of failure in re-marriage, examine whether the tamper switch is opened when checked as per 4-2, 1)~5) above and retry Step ④.

⑦ Press the [INFO] button.
⑧ Check that "There are no errors." is displayed in the "Error" window.

4-4. Lens mount check

1) Lens firmware version check

Start "Digital Cinema Communicator" from the PC.

Press the LENS button and confirm that the lens firmware is the specified version.

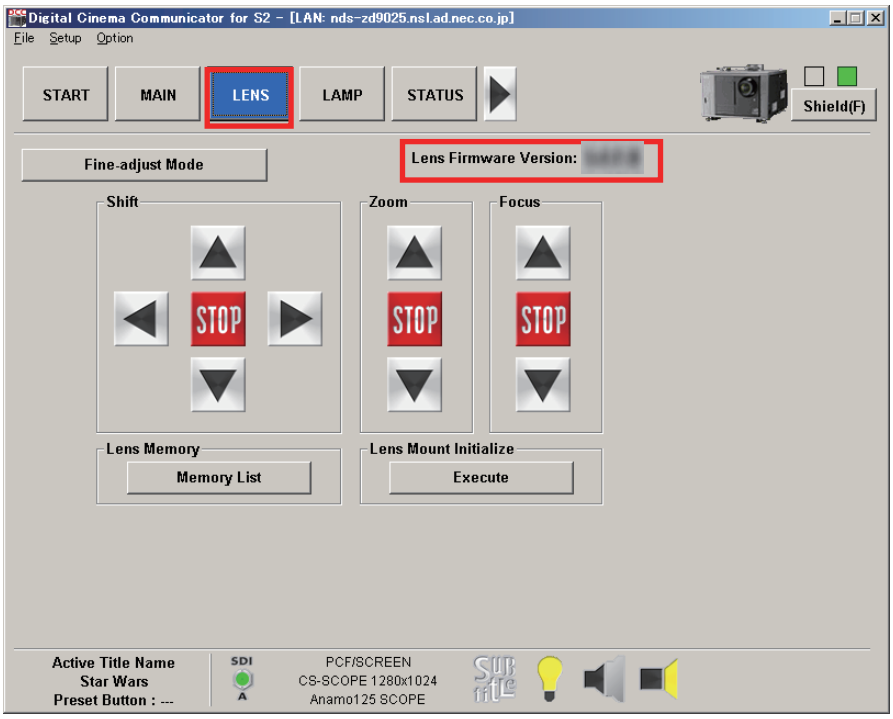

2) Lens operation check

Select the test pattern "CrossHatch".

Using the remote controller, confirm that the lens works normally.

CTL + RIGHT : The output image moves to the right.

CTL + LEFT : The output image moves to the left.

CTL + DOWN : The output image moves to the downward.

CTL + UP : The output image moves to the upward.

3) Lens Mount Limit SW operation checks
Select "Cross Hatch" of the test pattern.
Confirm that the lens moves within the range specified in the table below.
* Where the lens position is at top right, top left, bottom right, or bottom left, the missing of image shall be regarded as acceptable.

Azimuth	Horizontal base position	Vertical base position	Moving range
Upward (Up)	0° projection center	0° projection center	0.230 [V] (533 [mm]) or more
Downward (Down)	0° projection center	0° projection center	0.230 [V] (533 [mm]) or more
Leftward (Left)	0° projection center	From 0° projection center Upper 0.265[V]	0.070 [H] (308 [mm]) or more
Rightward (Right)	0° projection center	From 0° projection center Upper 0.265[V]	0.070 [H] (308 [mm]) or more

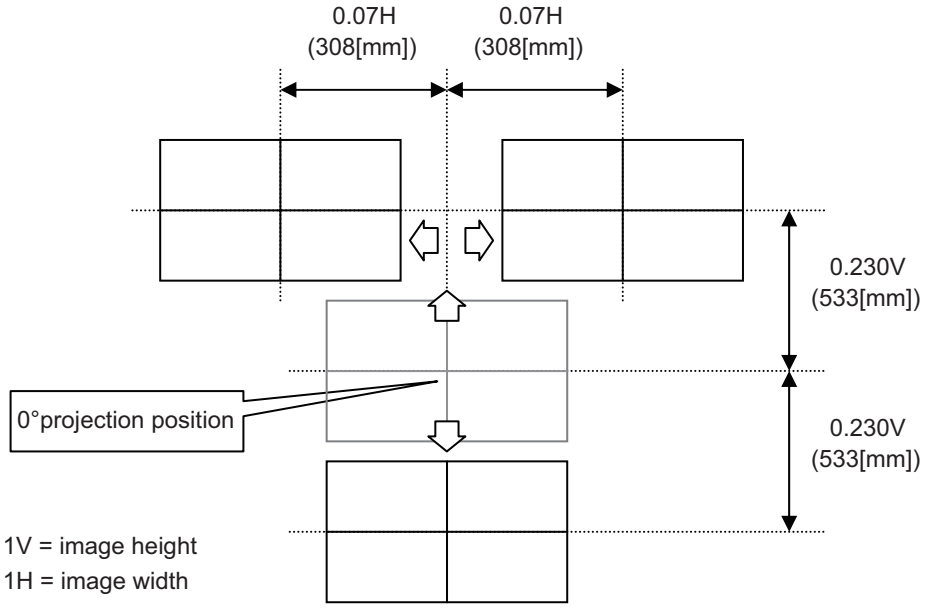

4) Lens calibration (Zoom / Focus)
   ① Power ON (Lamp lighting not required)
   ② Start "Digital Cinema Communicator".
   ③ Press the [SETUP] button, then press the [Installation] button.
   ④ Press "Execution" button of the Lens Calibration item.
   ⑤ Press the [Yes] button to start the calibration. The progress bar is displayed.
   When the progress bar disappears and the Installation screen is displayed, advance to Step ⑥ (approx. 2 minutes max.).

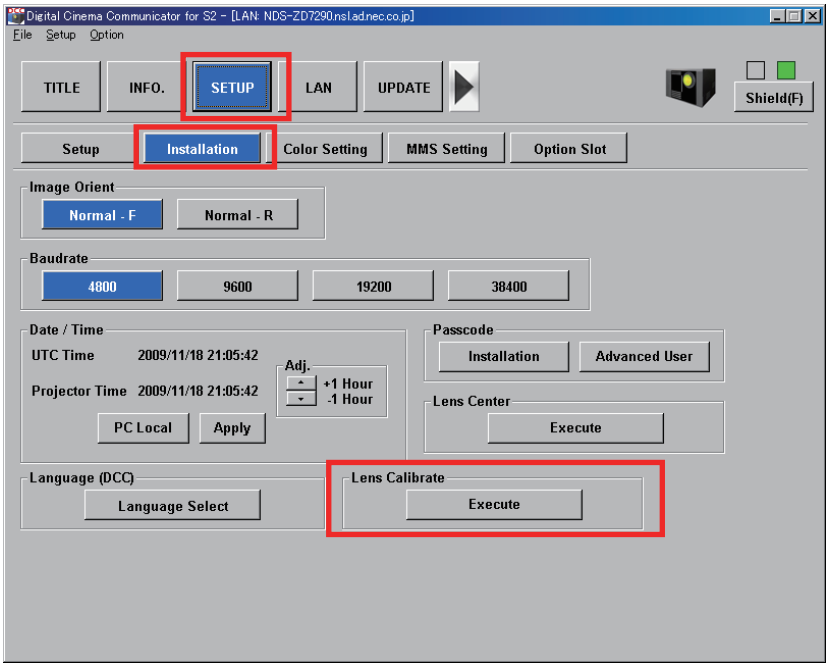

* When "Command Execution Fail" is displayed for Step ⑤, check the dip switch setup conditions on the Lens Mount PWB.
- For wrong setup
  Adjust and recheck it in the order of Power OFF → Power ON.
- For correct setup
  Acceptable after normal ending repeated 5 times continuously
  In the case of NG, replace the lens mount.

⑥ Start "CalibrationChecker.exe" from the PC.
⑦ Confirm that the IP address (192.168.10.10) of the NC2000C main unit is entered in the IP address input column.
Otherwise, enter the IP address.
⑧ Press the [Zoom/Focus Calibration Data Check] button.
⑨ When OK Dialog is displayed, set Lens Calibration OK.
Press the [OK] button to close the dialog and advance to Step ⑪.
⑩ If Fail Dialog is displayed, retry the above from Step ③.
Considered acceptable if normal ending repeated 5 times continuously is confirmed. In this case, advance to Step ⑪.
(Close the dialog with the [OK] button.)
⑪ After the completion of confirmation, press the [Exit] button to finish Tool.

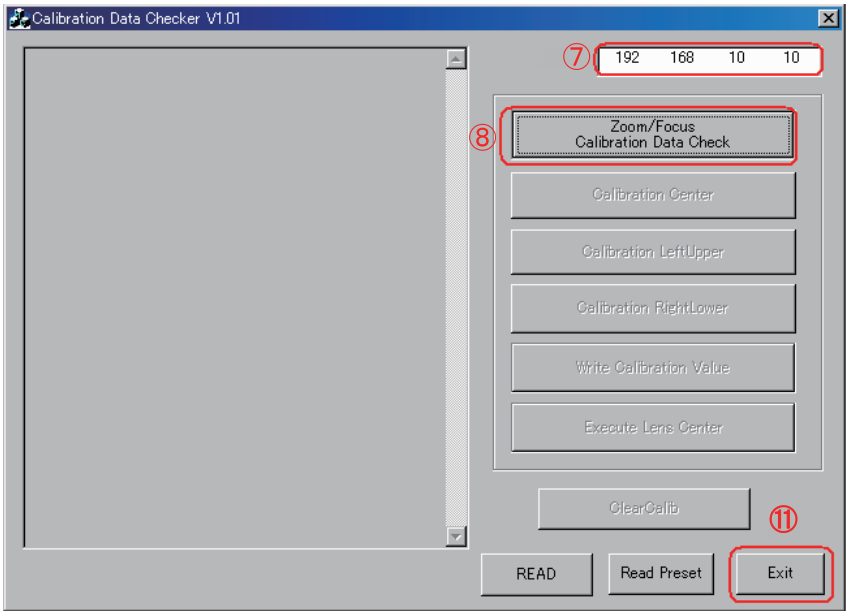

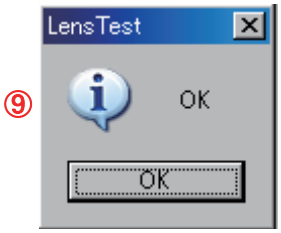

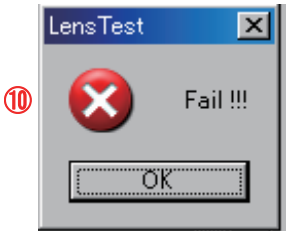

4-5. Version check of ICP Board/Legacy Board/Enigma Board

1) Power ON (Lamp lighting not required)
2) Start "ICP/Enigma Control Program" from PC.
3) Enter "192 168 10 10" in the IP address window. (①)
4) Select the [External Ethernet Port] checkbox of "Connection to ICP". (②)
5) Press Login . (③)

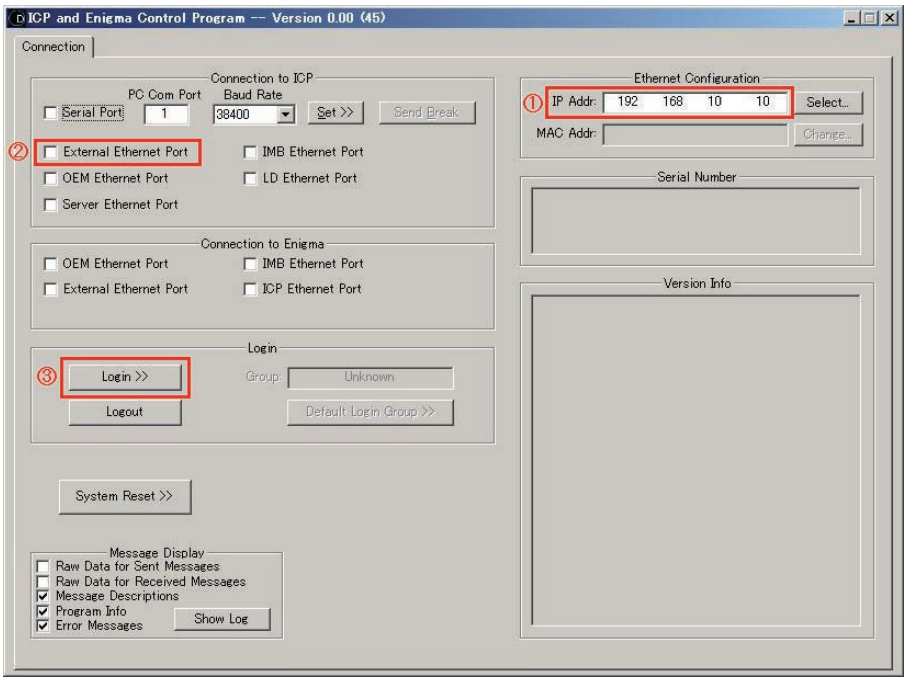

6) Enter "User ID" and "Password" of the "Projector Login" pop-up window, and press OK .

ID : Service

Password : Heal☐Thyself (☐ : Space)

7) Confirm that all software and firmware displayed in the "Version Info" window are the specified versions.

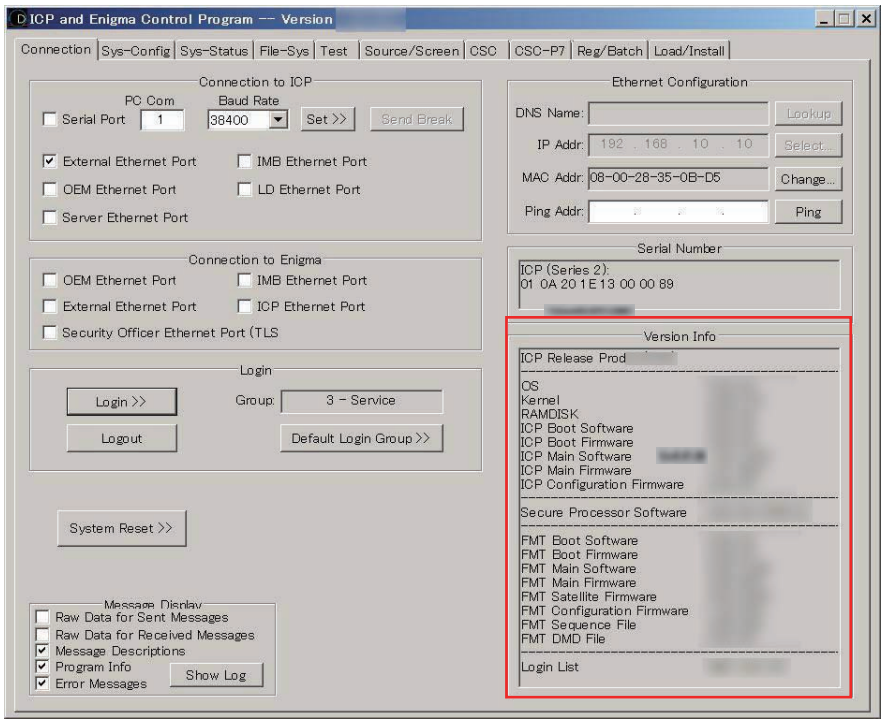

8) Start "Digital Cinema Communicator".
9) Press the [INFO.] button > [SI Board] button, confirm that the version of the SI board and Enigma board is the specified one.

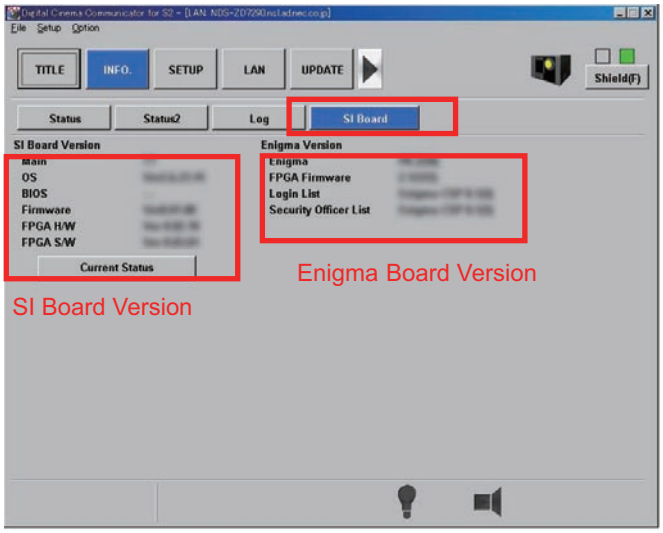

4-6. Image quality checks

1) DVI input terminal check

① Make connections between the DVI-A terminal and digital RGB signal generator through DVI-D cables.

② Change over the title to the Macro Key "5" (DVI-A).

③ Display the Ramp signal* and confirm that there is no problem like scale skip, coloring, and others.

* Select Signal No.204 of the signal generator.

④ Display SMPTE pattern and others** and confirm that there is no problem like jitter, coloring, and others.

** Select Signal No.201 of the signal generator and press the OPT2 button.

⑤ Change the connection to the DVI-B input terminal.

⑥ Change over the title to the Macro Key "6" (DVI-B) and confirm Steps ③ - ④.

2) SDI input terminal check

① Make connections between the SDI-A terminal and digital SDI signal generator through BNC cables.

② Change over the title to the Macro Key "1" (SDI-A).

③ Display the Ramp signal and confirm that there is no problem like scale skip, coloring, and others.

④ Display the chart pattern and others** and confirm that there is no problem like jitter, coloring, and others.

⑤ Change the connection to the SDI-B input terminal.

⑥ Change over the title to the Macro Key "2" (SDI-B) and confirm Steps ③ - ④.

⑦ Similarly, check the SDI-C/D port.

Signal format

Port Protocol	Source Format	Vertical Rate	Scan Type	Color Space
SMPTE 274M	1920 x 1080	24 [Hz]	Progressive	YpbPr

Signal pattern

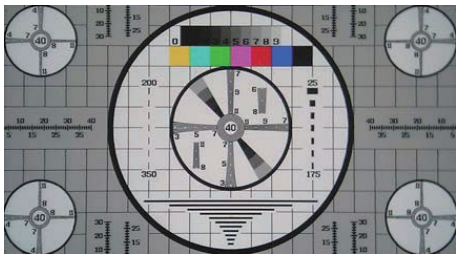

Mono scope

SDI Check-field

Ramp

Shallow RampShallow Ramp

4-7. Functional checks

1) Title select

Connect a signal cable to the "SDI A" and "DVI A" terminals. (Images are arbitrary.)

① Select "SDI A" from the LCD menu (MENU → Title Select) and confirm that the LCD display and the output image are switched over.

② Select "DVI A" similarly and confirm that the LCD display and the output image are switched over.

LCD display : The switched title display shall be secured.
Image : The switched image shall be free from turbulence.

2) Test pattern

All test patterns shall be displayed.

Test pattern list

	Name		Name
1	Alignment	7	White
2	Cross hatch	8	Black
3	Convergence	9	White 50[IRE]
4	Red	10	H-Ramp
5	Green	11	Logo
6	Blue		

3) Bulb Alignment

Display the "Bulb Alignment" menu from the LCD menu (MENU → Configuration → Installation → Bulb Alignment).

Confirm that the "Average" value changes in conjunction with the lamp output when this lamp output is changed with the use of the Digital Cinema Communicator.

4) Usage

According to the LCD menu (MENU → Information → Usage), select a menu from the list below and confirm that the lamp usage time changes.

Item	Time (default)
Projector	0 [H]
Bulb	0 [H]
Lamp House	0 [H]
Bulb Warning	– [H]
AC On Fan	No confirm
Power On Fan	No confirm
Lamp Fan	No confirm
Filter Body/Lamp	No confirm

5) Date/Time

① Start "Digital Cinema Communicator".

② Press the [SETUP] button, then press the [Installation] button.

③ Press the [PC Local] button under "Date/Time"

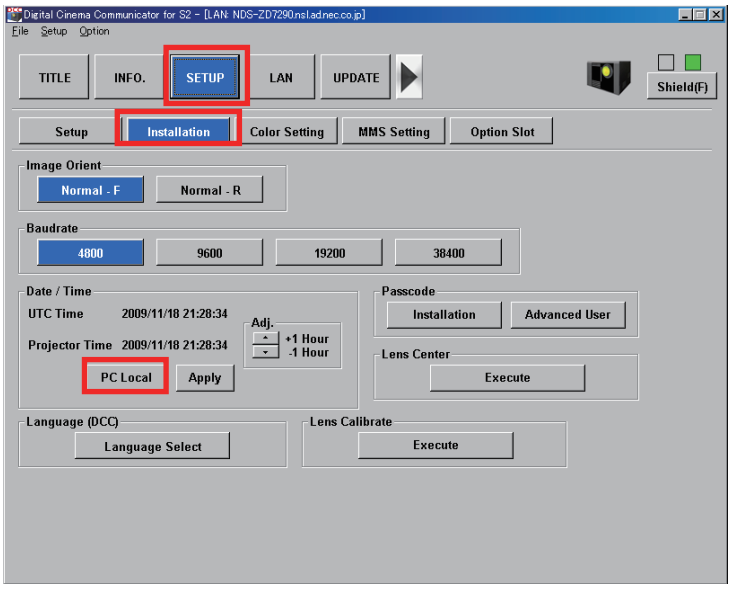

④ When local time of the checking place is displayed at the "Projector Time" window, press the "Apply" button.
If the displayed time is different from local time of the checking place, use the "Adj±" button (adjustable in the hour unit) and press the "Apply" button.

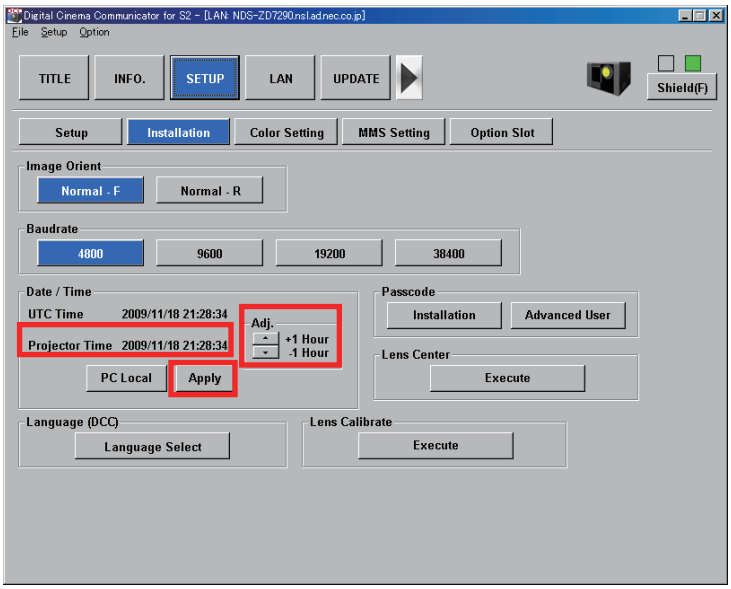

⑤ Confirm that local time of the checking place is displayed at the "Projector Time" window.

4-8. Operation check of the control panel and LED

1) Control panel key & LED

① Power Stanby

② Press the "MENU" and "8" keys at the same time for one second, and then release them. Confirm that the diagram shown below is displayed at the LCD.

③ Confirm that the control panel key is transferred as shown in the table below.

a) When the condition moves to this mode, all the key LEDs are lit in white.

b) When the key is pressed, the LED is transferred as shown in the table below. (Finished with Off)
Check the On/Off action of LEDs in each color.

c) Finished when all the key LEDs are unlit and LCD counter "KEY=0" is displayed.

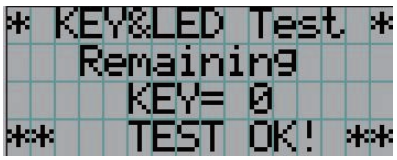

Key Name	LED status
KEYLOCK	White on > Umber on > off
<1> ~ <8> DOUSER	White on > Green on > off
LAMP, MENU EXIT, ENTER LEFT, RIGHT UP, DOWN IMB, PLAY, STOP	White on > off > White on White on > off

* Changing time: 1 second each

* NG if any LED is OFF without taking ON/OFF action.
The 2-group key LEDs specified below are not turned OFF unless all keys within the group are not checked yet.
・ENTER, EXIT, MENU, UP, DOWN, RIGHT, LEFT, LAMP
・IMB, START/PAUSE, STOP

④ Turn off the power switch.

2) "Rear Status" LED (not required if already executed)
Confirm operation of the table below.

Mode	Status	Processing
Standby	Normal	Lights in orange
	Warning	Lights in red
	Error	Blinks in red
Running	Normal	Lights in green
	Warning	Lights in red
	Error	Blinks in red
Cooling	Normal	Blinks in orange
DOUSER	Close	Blinks in green

4-9. Serial No. data writing

1) Make connections between the PC and the RS-232C terminal of the CPU board through a serial cable.

2) Serial number writing

① Start "Digital Cinema factory tool" from the PC.

② Check the "NC series" and select the COM" port.

③ Press the [Connect] button.

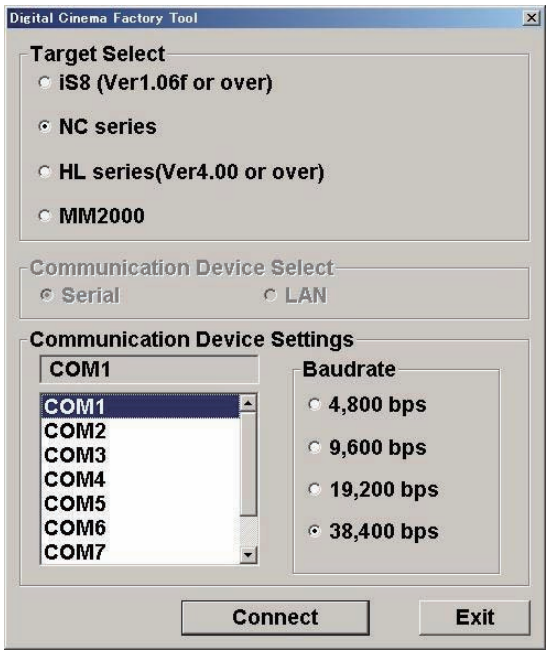

④ Enter the serial number in the "Write Data" window and press the [Write] button.

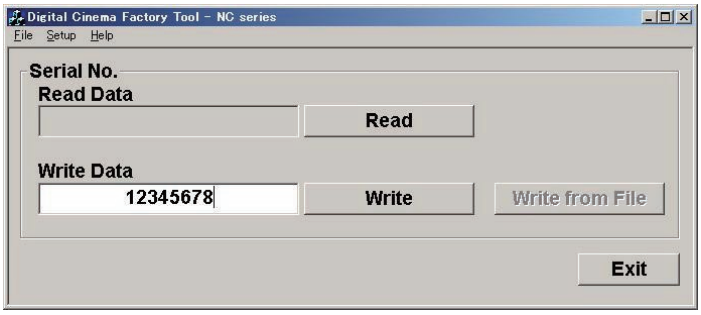

⑤ Finished when the progress window specified below disappears.

⑥ Connect the "Digital Cinema factory tool" after power cycling.
When "Read" is pressed, confirm that numerals of the "Read/Write Data" window are correct.

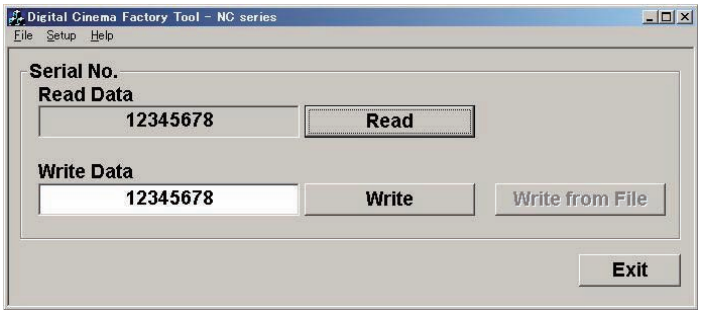

* When a different port is selected as per Item ②, the following message is displayed.
Check the serial port of the PC.

If connection is suspended in the middle of confirmation, the following message is displayed.
Check cable connections.

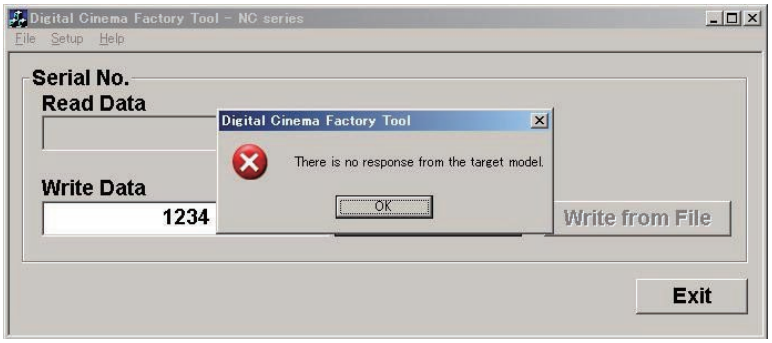

4-10. Acquisition of Digital Cinema Certificate Data

* For this work, cut off the ICP & Enigma Control Program.

1) Start "ReadCert.exe" from the PC.
   Configure the system IP address.
   System IP Address : 192. 168. 10. 10

2) Press the Execute button.

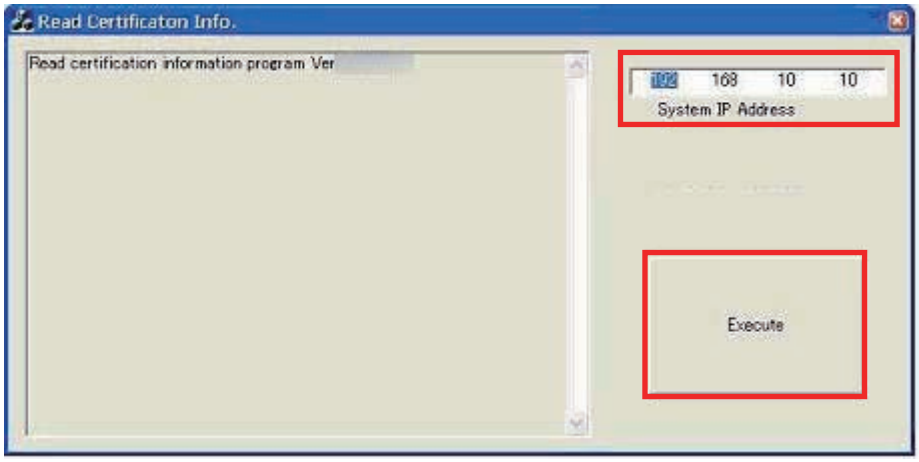

3) Finished when "Complete" is displayed in the final line of the window.
   The data file is saved in the folder where the "ReadCert.exe" file is located. In this case, the file name is the projector serial number.

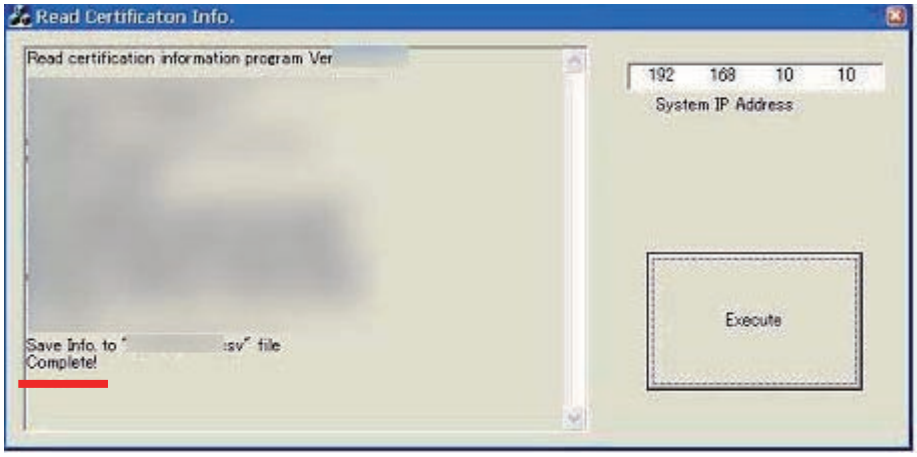

4) Confirm that the serial No. of the saved file is identical with that of the projector.

* Confirm, without fail, that any projector without this data file becomes useless.
In the case of ICP board replacement, the above checks shall be carried out again, without fail.
The data file shall not be opened with "MS Excel".

CPU PWB Circuit Operation

The CPU PWB (PWC-4707) is in charge of maintaining the projector functions and the control of major boards.

1. CPU

The S3C2440A-400 (IC7000) is an ARM9 core CPU.
It controls the Reset / Power sequence toward each board, data setting for each device, and the respective functions of the projector.
After the power is ON and the reset condition is canceled by BD4730G (IC7002), the CPU reads out BIOS from the flash memory (IC7008) to start itself up. After that, the CPU reads the F/W info from the flash memory (IC7009) and starts its behavior based on the data in IC7008.

- Power
  The CPU operates on the two types of power supplies specified below.
  I/O: 3.3V
  Core: 1.3V Stepped down from 3.3V (P3P3V) through the Series Regulator (PQ015YZ01 @IC7001).

- Clock
  The SG8002 (X7000) is a 12MHz OSC that is used as a bus clock for the main clock in the CPU and other devices.

- Reset
  The BD4730G (X7002) is used to supervise the main power 3.3V generated in IC7300.
  When the 3.3V (P3P3V) line lowers to 3.0V or below, the “low” output is generated and sent to the CPU for resetting.
  LED (D7000) is synchronized with this reset status.
  Off: CPU Reset
  On: CPU Active
- Memory
  - Flash memory
    MX29LV640EBTI-70G (IC7008): BIOS data storage
    M29W320EB70N6E (IC7009): Firmware storage
  - SDRAM
    IS42S16160C-7TL (IC7007) is a cash memory.
    Synchronized with the bus clock @133MHz.
- Control
  External I/O: RS232 (M7002), USB (M7000), Remote control (M7003), GPIO (M7001), 3D control (M7004)
  Projector Ctl: Reset, POWER_GOOD, POWER_DOWN, Memory, I2C, UART, SPI, Lamp, LED (Light), MM, etc.
  Functions of each I/F:
  - I2C: EEPROM IC7006 (BR24L32F)
    Serial No., cumulative time of projector, lamp, etc., and other data are saved here.
    Clock function
    The 32.768KHz built-in real-time clock RTC-8564JE (IC7005) is in charge. A back-up feature is given by the super-capacitor C7036.
  - SPI: Light Sensor (via the A/D converter ADCS7476 of DIV)

2. ASSIST3

S1L53354 (IC7100) is an ASIC with the functions specified below.

- CPU I/F
- Ethernet Controller I/F
- Lens Mount / Motor Control
- Lamp Power Control
- Fan, Cooler Pump Control
- Control Key Control
- LCD Control
- I2C, UART

  (Devices after Ethernet are controlled via the PJDIV PWB.)

  Functions of each I/F:

  I2C: ① 5V I/F

  Temperature Sensor (TSENS PWB)
  EEPROM (DIV PWB)
  EEPROM (KEY I/O PWB)
  Control Panel LED Changeover
  Motor Control (for Motor PWB / 3200)

  ② 3.3V I/F

  Fan Control, Supervision
  Buzzer
  Anamo
  Lens Mount Voltage Control
  Light Sensor Reset
  Lamp Door Supervision
  Lamp Temp Supervision
  GPSU Supervision (Fan, voltage)
  Tamper Supervision
  Cooler Pump Control

  UART

  ① Lamp Power Supply Control (PEDE-A)
  ②Motor Control (Lens Mount)

3. LAN

The RTL8100CL (IC7101) is an Ethernet controller with the respective functions of Ethernet MAC, PHY, and Transceiver applicable to 10Mbps, 100Mbps operation.
External projector control and setup are carried out via the LAN.

The CPU functions as a host device and ASSIST3 provides a bridge of CPU bus and PCI bus, and transfers data to the RTL8100CL (IC7101).
The differential data modulated by the RTL8100CL pass through the transformer (T7100) and are sent from the RJ-45 connector (M6003) on the Mother PWB to the outside and other boards via the router.

- Power
  This controller operates on the two types of power supplies specified below.
  I/O: 3.3V
  Core: 2.5V, Stepped down from 3.3V (P3P3V) through the Series Regulator (PQ070XZ01ZP @IC7102).
- PROM
  BR93L46RF (IC7103) is a 64*16-bit EEPROM where the MAX address, ID parameter, etc., are saved.

4. External Interface Port

- GPIO M7001 (D-Sub 37pin)
  Used for power sequence and signal changeover for the projector.
  Input: #5 - #8, #24 - #27
  The data level is converted at the photo coupler (IC7205 - 7208) and the input data are entered in the CPU via the buffer (IC7214).
  #3, 4, 2, and 23 are connected to ICP.
  Output: #13 - #18, #32 - #35
  The photo coupler (IC7201 – 7204) is driven from the CPU via the buffer (IC7214).
  #9 - #12 and #28 - #32 are connected to ICP.
- 3D M7005 (D-Sub 15pin)
  3D control
  Level conversion is performed by the SW (IC7215, 7216) and the buffer (IC7213, 7217) under the control from the ICP and CPU.
- RS232 M7002 (D-Sub 9pin)
  Used for projector control from external equipment.
  Controlled by the CPU via the transceiver (AD3202 IC7218).
  Otherwise, the 232C line of the 3D Ctl Port is connected to the CPU via another channel of the same device.
- USB M7000
  Controlled by the CPU via the transformer T7101.
  LM3525 (IC7110) is the Power SW (+5V) of the USB Port and controlled by the CPU.
  This device has a protective circuit. It suspends the supply of power when the output current exceeds 1A.
- Remote controll M7003 (Mini Jack)
  This connector receives a +5Vp-p signal input from the remote controller through cables.
  Waveforms are trimmed by the FET (Q7103, 7104) and the processed signal is fed to the ASSIST3 after level conversion (3.3Vp-p).
  The ASSIST3 decodes this signal and the resultant remote control input is sent to the CPU.
  IC7102 (PQ070XZ01) supplies the power for remote control drive.
  The output from this device is maintained at approximately +4.0V so that +3.3V can be maintained on the remote control side in the case of 16m cable connections.

5. H/W Install

This board is connected to the PCIe connector on the Mother PWB via the card edge (PO1700).

6. POWER

The input power is fed at +5V DC and +12V DC.
Refer to the diagram below in regard to the power supply system for the respective devices.

① 12V
The power is fed from the GPSU via the Mother PWB.

② 5V
The power is fed from the DIV PWB via the Mother PWB.
The main power 3.3V is gained by step-down from 5V through the Series Regulator (PQ070XH02 @ IC7300).
The LED (D7300) is an indicator of this line being in live state.

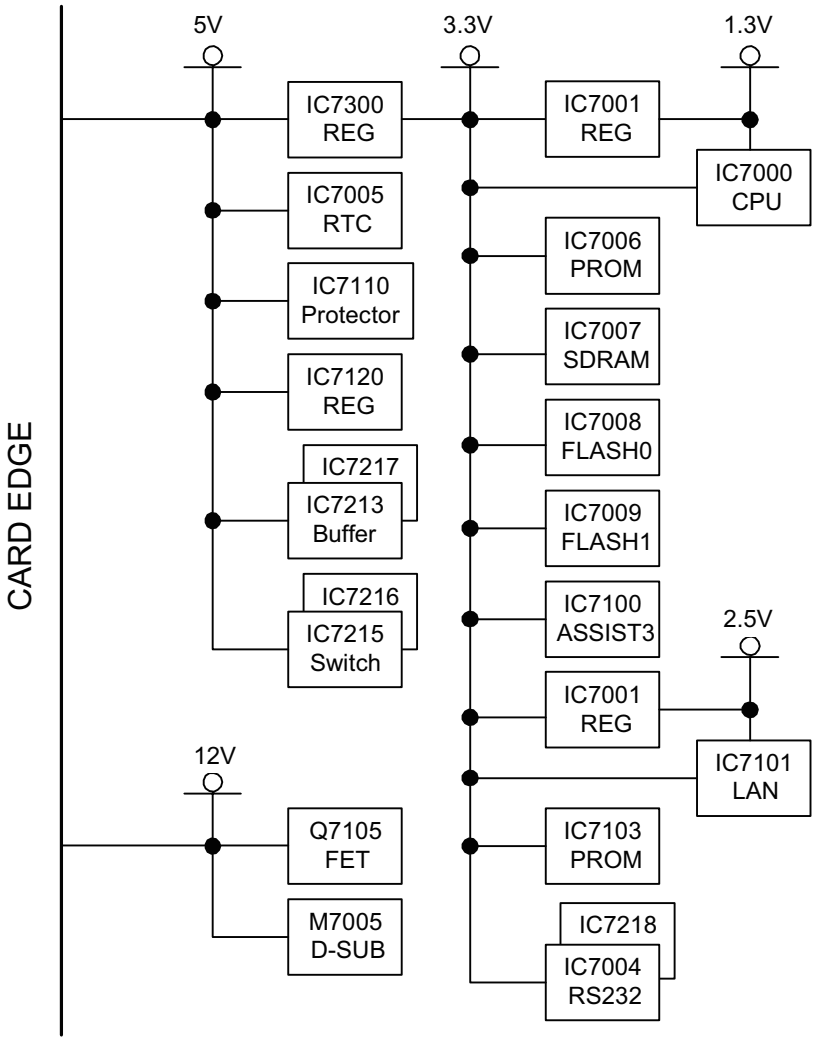

ICP Circuit Operation

The ICP (Integrated Cinema Processor) is in charge of video image processing conforming to the requirements of the DLP Cinema® Projector.

1. Video system

① Input: 2ch
Video signal inputs from the respective ports of Legacy, MM, and Media Block are entered via the Mother board.
Internal processing of each channel is exclusive.

② Video processing
Color correction, gamma correction, 3D, test pattern generation, and so on

③ Output: Output is sent to the 3ch FSB.

2. Control system

① RS232

② USB 2.0: Type A &Type B (TBD)

Data below are sent via the Mother board.

③ Ethernet: 1000 baseT
Ethernet address: 192,168,254,243
Controlled from the outside.

④ GPIO: 3D reference signals
TBD for general use

⑤ Satellite Interface: Configuration, data setup, etc.

3. POWER

① Input: +12V DC supplied through the Mother board.

② Output: 3.3V and 2.5V for FSB

4. H/W Install

This board is connected to the PCIe connector (A1J1, A1J2, A1J3) on the Mother board.

5. Miscellany

PWRGOOD: Indicates that the DC power satisfies the standard value.
It is used for DMD Safe Manner setup and others at the time of initialize start or power off.

Pixel Clock: Standard clock for input video signals
It is not related to communication or test pattern display.

ICP_POWERDOWNZ: Standby mode
At the time of Active "Low", all regulators of this board are disabled and their power is turned off.

6. LED Status

LED Identifer	Short Description	Full Description
12VDC *	12VDC Supply	Indicates presence of external 12VDC supply Off = 12VDC not present Green = 12VDC present
RE GEN [PWR]	Regulators Enablrd	Indicates the presence of the internal regulator enable signal. This signal enables the following regulators: ICP 3.3VDC, 2.5VDC, 1.8VDC, and 1.2VDC Satellites 3.3VDC and 2.5VDC USB 5.0VDC Off = Internal regulators not enabled Blue = Internal regulators enabled
PWRG *	POWERGOOD	Indicates the state of the POWERGOOD input signal. Off = POWERGOOD not active Green = POWERGOOD active
ICP *	ICP FPGA Done	Indicates successful configuration of the ICP FPGA. Off = FAIL Green = OK
ICPC *	ICP Configuration FPGA Done	Indicates successful configuration of the ICP Configuration FPGA. Off = FAIL Green = OK
FMT *	FMT FPGA Done	Indicates successful configuration of the FMT FPGA. Off = FAIL Green = OK
FMTC *	FMT Configuration FPGA Done	Indicates successful configuration of the FMT Configuration FPGA. Off = FAIL Green = OK
ICPST [ICP]	ICP GPGA State	Indicates the configured state of the ICP FPGA. Off = N/A Red = Unable to configure FPGA with Main or Boot application Yellow = Boot Application
FMTST [FMT]	FMT FPGA State	Indicates the configured state of the FMT FPGA. Off = N/A Red = Unable to configure FPGA with Main or Boot application Yellow = Boot Application Green = Main Application
OSST [OS]	Operating System State	Indicates the state of the Operating System. Off = FAIL (State 0) Red = FAIL (State 1) Yellow = FAIL (State 2) Green = OK
SOFTST [SOFT]	Software State	Indicates the state of the software application. Off = FAIL (State 0) Red = FAIL (State 1) Yellow = FAIL (State 2) Green = OK

PORTA	Status of Port A	Indicates the status of ICP input port A. Off = No Source Present Red = TBD Yellow = TBD Green = Active Source Present
PORTB	Status of Port B	Indicates the status of ICP input port B. Off = No Source Present Red = TBD Yellow = TBD Green = Active Source Present
D18 [USB B]	USB OTG Port	Indicates the status of the USB OTG port (TBD)
D19 [USB A]	USB Host Port	Indicates the status of the USB Host port (TBD

Descriptions in [ ] are for bezel notation.
* Discrimination impossible from onboard outside

Legacy Interface PWB Circuit Operation

The Legacy Interface PWB (PWC-4711) is in charge of data transmission processing toward the ICP board for the two systems of digital video signals (SDI, DVI).
Legacy means the succession of both interfaces that support a conventional Cinema Projector.

1. SDI (Serial Digital Interface)

There are provisions of four channels of input ports applicable to the 3G SDI (Data rate 2.97 Gbps incompressible Digital Video Stream).
The input video signals from the BNC are transmitted to the FPGA via the cable equalizer.
The cable equalizer LMH0384 (IC1000, 1002, 1004, 1005) performs amplification/recovery (transmission loss compensation) according to the attenuated signal frequency.

2. DVI (Digital Visual Interface)

There are provisions of two channels of DVI input ports for the HDCP.
The DVI Receiver Sil9125 (IC1100, 1200) performs parallel conversion of the TMDS (Transition Minimized Differential Signaling) signals into the respective RGB signals of 10bit, and transmits the processed signals to the FPGA.
The operation mode of this device is set up at the time of initialize from the FPGA through I2C.
The circuits of the respective channels are identical with each other, but there is only difference in the case of slave address setup.

The BR24L02 (IC1103, 1203) is an EEPROM where the EDID data common to both channels are saved.
The 26.322MHz Crystal Oscillator (X1100, 1200) is used for the main clock, interruption, etc.
These data can be written by controlling the NC7WB66 (IC1102, 1202) SW from the FPGA.

3. FPGA

The XC5VLX110T (IC1300) is an FPGA with the functions outlined below.
Input video signal processing
Enigma board I/F (Format conversion, etc.)
Video data output to the ICP board
Input channel changeover
Each device setup, etc.

OSC	Reference clock for 148.5MHz (X1300) SDI
	200MHz (X1302) system clock
	70MHz (X1303) for 3D
DDR2	SDRAM (IC1900-1902, 1950-1952) VIDEO frame cash for 3D

4. CPLD

The EPM570F255C5N (IC1500) is in charge of reset control and others for FPGA Configuration and each device.
Programs are already written in.
The bootstrap sequence is started by this device.

① Power on
② The Reset IC BD45301 (IC11502) cancels the reset condition of PLD with a reset signal from the CPU PWB.
The threshold voltage with Power on Reset is +3.0V and the output is in open drain mode.
③ The PLD cancels the reset condition of CPU, EPGA, Enigma, and Ethernet PHY (A, B).
④ Data are loaded from the 32MB Flash ROM S29GL032 (IC1501) for FPGA configuration.
The LED D1300 “FPGA DONE” is lit upon the completion of FPGA configuration.

5. CPU

The MCF54452 (IC1600) is in charge of setup and control of each device.
Communication with the outside is made through Ethernet, being connected with the CPU via the PHY Layer Transceiver KSZ8041 (IC1604).
For FPGA connection and control, the UART Enigma board is bridged with Ethernet through the said KSZ8041 (IC1605).
IC1601 (NTSTU32M16CG-3C) is used for the DDR2 SDRAM, CPU cash.

① Power on
② Reset canceled from the PLD
③ F/W and S/W are loaded for initialize from the 128MB Flash ROM M29W128GL70 (IC1503).
④ Two systems of Ethernet transceivers are initialized by the MII I/F.

6. Enigma I/F

The Mezzanine type Enigma board is installed in the PO1400, 1401.
The internally processed data entered from the FPGA in the PO1400 are transmitted from the PO1401 and returned to the FPGA again.
This route is used for SDI signal processing only.
The LED D1400 “ENIGMA FPGA DONE” is lit upon the completion of FPGA configuration within this board.

7. H/W Install

This board is connected to the PCIe connector on the Mother PWB via the Card Edge (PO1700).

8. POWER

The input power voltage is +12V DC.
Refer to the next page in regard to the power supply systems for each device.
LED Status:

D1802: “P12V” is lit when the DC +12V supply is available.
D1803: “P3P3V_A” is lit when the A-ch output voltage of +3.3V is supplied to the DC/DC Converter IC1800.
D1804: “P3P3V_B” is lit when the B-ch output voltage of +3.3V is supplied to the DC/DC Converter IC1800.
D1805: “POWERGOOD 33” is lit when stable outputs are available in both channels of the DC/DC Converter IC1800.
D1810: “POWERGOOD B” is lit when stable outputs are available in both channels of the DC/DC Converter IC1808.

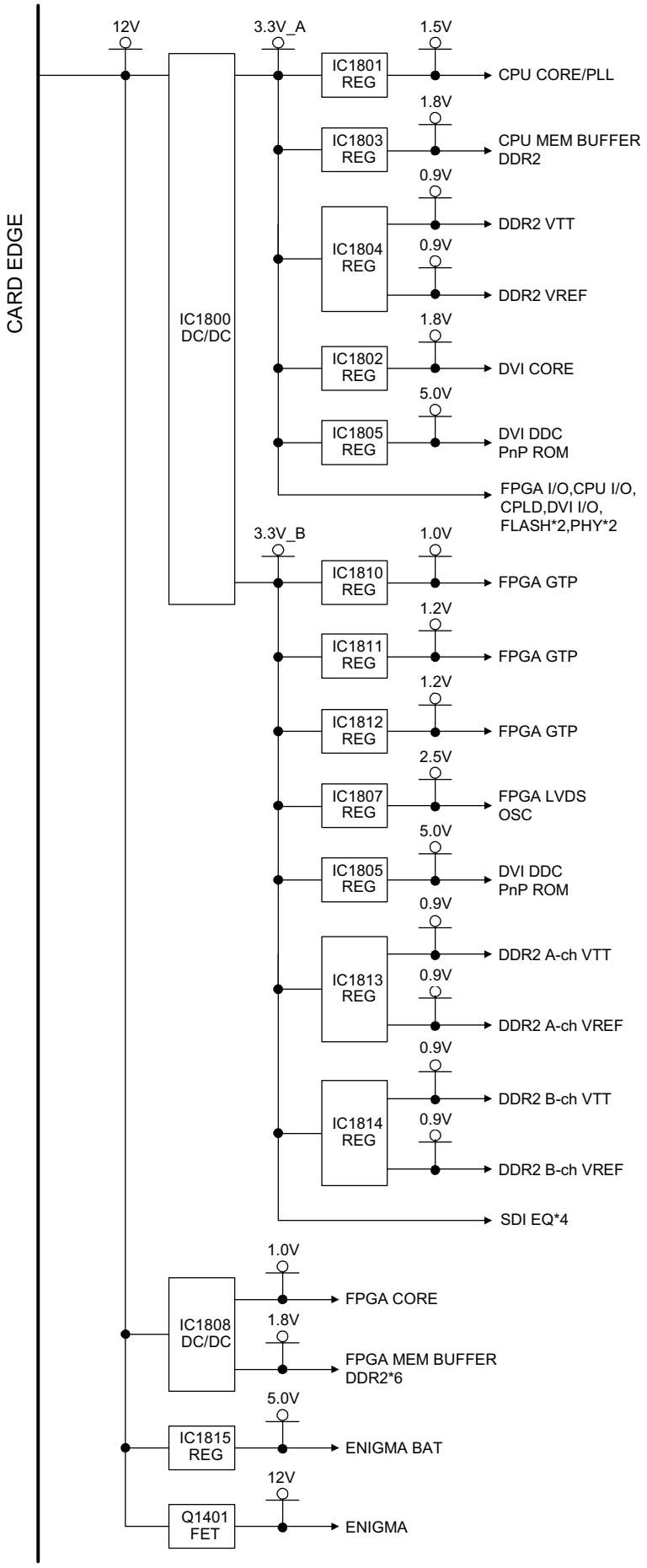

PJDIV PWB Circuit Operation

① Power supply
The voltages of 5V and 3.3V are produced from the 24V power supply of the power unit with the use of a DC/DC converter.
The 5V power is fed to the internal circuits of the PJDIV PWB and to the CPU PWB.
The 3.3V power is fed to the internal circuits of the PJDIV PWB.

② Fan driver circuit
Using the PWM modulator IC, speed control is performed for each fan.
The above-mentioned IC is controlled through I2C from the CPU PWB.
Eleven fans are driven in the NC3200S and nine fans are driven in the NC2000C and NC1200C.
Since each fan speed can be read out, deterioration in the fan can be detected.

③ Pump driver circuit
This circuit is almost identical with the fan driver circuit. It is used as a power supply of the pump for pump ON/OFF.
Since the pump speed can be read out, deterioration in the pump can be detected.

④ A/D conversion for LSENS PWB output
The L-SENS PWB generates a voltage output in proportion to the brightness of the lamp.
The generated voltage output is A/D-converted and identified at the CPU PWB.
In the CPU PWB, the identified info is used for the automatic correction of lamp output and other functions.

⑤ Memory
A 4k-byte E2ROM connected with the CPU PWB through I2C is loaded.
This memory contains the serial number and other info singular to the set.
Similar memories are installed in the CPU PWB and the KEYIO PWB. If either board should be replaced, the above-mentioned info can be maintained safely.

⑥ Motorized Anamorphic lens turret driver circuit
The 12V or 0V power is fed as a turret power supply under the control from the CPU PWB.
The driving capacity is 12V/200mA. There is a protective circuit of 500mA.

⑦ Lamp door detector circuit
The open/shut condition is supervised for the door where the lamp house is accommodated.
It is connected to the hardware protective circuit for the purpose of forced unlighting of the lamp.

⑧ Thermo detector circuit
A thermostat is used to observe the lamp house temperature.
It is connected to the above-mentioned hardware protective circuit that is intended for the forced unlighting of the lamp.
The lamp is unlit when the specified lamp house temperature is exceeded.

⑨ Buzzer
A buzzer is turned on and off for the SLED-A PWB.
Under the control from the CPU PWB, the buzzer is made to sound shortly after the power supply is turned on or upon the occurrence of any error.

⑩ Statuses LED driver circuit
The Statuses LED located behind the set is turned on and off.
Basically under the control from the CPU PWB, the LED is lit in green in normal state, in orange for warning, and in red in the case of malfunction.

⑪ Thermometer I/F
This function is used for the changeover of the thermometer (TSENS PWB) control line.
In addition to the above-mentioned thermostat, there are provisions of eight thermometers (TSENS PWB).

Mother PWB Circuit Operation

The Mother PWB (PWC-4708) is a board intended to make major board connections and relaying for the establishment of the projector functions.

1. Board connections and relaying

Each board is installed in the slot specified below.
The slot is a general-purpose PCIe connector and its board side is of the card edge type.
Inter-board control is carried out through the LAN and each slot is provided with an independent RJ45 connector.

Circuit symbol	PWB	LAN I/F
A1J1/A1J2/A1J3	ICP	M6000
A2J1/A2J2	LEGACY INTERFACE or IMB	M6001
A3J1/A3J2	MMOUT or IMB	M6002
A4J1	CPU	M6003
A5J1	PJDIV	—

* When multiple circuit symbols are provided, the number of items used applies to a single board (for example: 3 slots occupied for a single piece of ICP).
A2J2 and A3J2 are the board-attributable slots. All lines OPEN.

2. FSB connections

The FSB is connected among all line ICPs.

① Video, control
The three connectors of M6001, 6002, 6003 are connected with the six twist-pair cables through the repeater board “INTERVENE PWB.”
The INTERVENE PWB is a board intended for the speedy connection and disconnection of cables for maintenance servicing and others.

② Power supply
The 12V, 3.3V, and 2.5V power of the PO6000 is fed to each FSB through branch cables.
The 3.3V and 2.5V power is used for DC/DC converter output relaying on the ICP.

3. Power

The input power supply of +12V DC is fed to the PO6010 where it is branched and distributed to the respective slots and boards.

4. Outlined bus lines

① Video system
Input A-ch: A3J1 (Mother Board lower-stage input slot) > Mother A1J1 > ICP
Input B-ch: A2J1 (Mother Board upper-stage input slot) > Mother A1J2 > ICP
Output: A1J3 (ICP) > PO6001-6003 (FSB*3)

② Control
A4J1 (CPU) – A5J1 (PJDIV)
A4J1 (CPU) – A1J2 (ICP)

FSB PWB (Formatter Satellite Board)

PWC-4670 (RED/GREEN)/4671 (BLUE)

This PWB is used for data formatting for the video processor and DMD in the cinema circuit.
The video data input is entered in the LVDS (2.5V) 16-pair mode. After the data have been processed at U1 for the respective functions as described in Item 1 below, they are transmitted to the DMD in the LVDS (2.5V) 64-pair mode.
PWC-4670 drives the red and green DMDs and PWC-4671 drives the blue DMDs.
The DMDs and the PWB are connected through the interposer “8810-001” made by Inter Con System, Inc.
The circuit and the behavior of each channel PWB are identical with each other.

1. Electrical Interface

1-1. Initialization

Signal Name	Description	I/O	Type
SAT_PWRGOOD	Main Power Status A high value indicates all supplies are within operating voltage range.	I	2.5V LVCMOS
SAT_RSTZ	Hardware Reset Asynchronous Reset (Asserted LOW). When asserted, the FPGA will be initialized to the power up state and remain so until SAT_RSTZ is de-asserted.	I	2.5V LVCMOS

1-2. Satellite Data Interface - Data & Control

Signal Name	Description	I/O	Type
SAT_CLK_P/N	Input Data Clock – 165 MHz	I	2.5V LVDS
SAT_DATA_P/N(15:0)	Input Pixel/Control Data Video synch signals (Vsync, Hsync & Actdata) are embedded in the 16 bit data word.	I	2.5V LVDS
SAT_TXDATA_P/N	Input register and setup control data	I	2.5V LVDS
SAT_RXCLK_P/N	Output data clock	O	2.5V LVDS
SAT_RXDATA_P/N	Output register and setup control data	O	2.5V LVDS
SPARE_LVDS(1:0)	Input Vertical Sync	I	2.5V LVDS
SPARE_LVTTL(1:0)	Input Horizontal Sync	I	3.3V LVTTL

1-3. DMD LVDS Interface

Signal Name	Description	I/O	Type
DCLK_C[P,N]	DMD Port C Differential Clock	O	2.5V LVDS
DCLK_D[P,N]	DMD Port C Differential Clock	O	2.5V LVDS
SCTRL_C[P,N]	DMD Port C Differential Serial Control	O	2.5V LVDS
SCTRL_D[P,N]	DMD Port C Differential Serial Control	O	2.5V LVDS
DATA_C[P,N](15:0)	DMD Port C Differential Serial Data	O	2.5V LVDS
DATA_D[P,N](15:0	DMD Port C Differential Serial Data	O	2.5V LVDS

1-4. DMD Serial Communications Port Interface

Signal Name	Description	I/O	Type
SCP_CK	SCP Bus Clock	O	3.3V LVTTL
SCP_DO	SCP Bus Output Data	O	3.3V LVTTL
SCP_DI	SCP Bus Input Data	I	3.3V LVTTL
SCP_DMD_ENZ	SCP Bus DMD Enable (Active LOW)	O	3.3V LVTTL

1-5. DMD Reste and Mode Control

Signal Name	Description	I/O	Type
DMD_PWRDNZ	DMD Reset (Active LOW)	O	3.3V LVTTL
SINGLE_ASIC_EN	Single ASIC configuration Enable (Active HIGH)	O	3.3V LVTTL
DMD_MODE_[A,B]	DMD Bandwidth Mode Select	O	3.3V LVTTL
MBRST(29:0)	Non-logic compatible Mirror Bias Reset signals Connected directly to the array of pixel mirrors Used to hold or release the mirrors	O	—

1-6. Satellite FPGA Programing Interface

Signal Name	Description	I/O	Type
SAT_CCLK	Data Clock – used to time C_DATA input during configuration	I	2.5V LVCMOS
SAT_DIN	Configuration Data – serial data input used to configure the device.	O	2.5V LVCMOS
SAT_DONE	Configuration Done – indicates completion of device configuration.	I	2.5V LVCMOS
SAT_INIT_B	Before MODE pins are sampled, SAT_INIT is an input that can be held Low to delay configuration. After MODE pins are sampled, SAT_INIT is an open-drain active Low output indicating whether a CRC error occurred during configuration: 0 = CRC error 1 = No CRC error	I/O	2.5V LVCMOS
SAT_PROG_B	FPGA Full-chip reset (Active LOW)		2.5V LVCMOS

2. FPGA functions

The FPGA (U1 / XC4VLX25-HFFG668C) offers the functions specified below.

- ☐ Satellite Data Interface (SDI)
- ☐ Satellite Register Interface (SRI)
- ☐ Contour Mitigation (STM)
- ☐ Non-Binary LUT (NBLUT)
- ☐ Bit Plane Mux (BPM)
- ☐ Corner Turn Formatter (CTF)
- ☐ Bit Plane Frame Storage
- ☐ DMD LDI Interface (LDI)
- ☐ Universal Memory Control (UMC)
- ☐ RLDRAM Controller (XMC)
- ☐ Satellite Synchronization Function (SSF)
- ☐ Realitime Sequence Control (RSC)
- ☐ Test Pattern Generator (TPG)

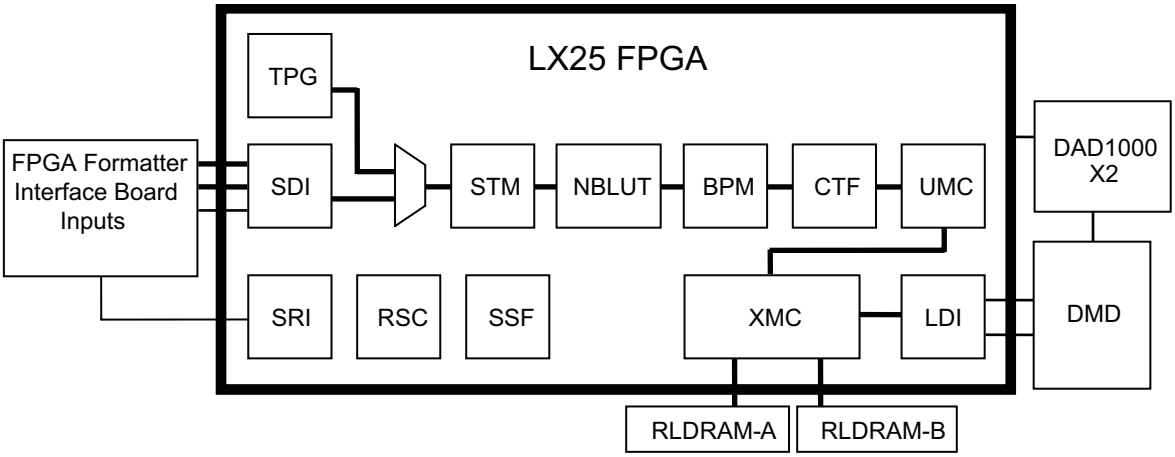

3. DAD1000

The DAD1000 (U10, U11) is in charge of DMD bias voltage supply and pixel mirror control.
Voltage supply is available only from the output circuit of the U10 VOFFSET.
For mirror control (reset waveform), a total of 30 lines are divided into 15 (even-numbered out of 0-29) for U10 and another 15 (odd-numbered out of 0-29) for U11.
In this system, the DMD is driven in the Single ASIC mode. Therefore, only Port C and Port D are used out of a total of four ports, A ~ D.
For this reason, 64*2 pins are not used for Ports A and B.

4. RLDRAM (U7, U8)

As a main memory, two RLDRAMs (U7, U8) of 288M (8M*36-bit) are used. The upper section (Addr0~35) is shouldered by U7 and the lower section (Addr36~71) is shouldered by U8.
This device requires the four types of power supplies as specified below.
The VEXT supplies the 2.5V power through Q2 (Power FET).
The VDD and VDDQ supply the 1.8V converted by U5.
The VREF and VTT are the two systems where the 5V output from the DAD1000 is converted into 0.9V by U9.
U9 (TPS51100DGQ) is a device optimized as a DDR memory termination.

VEXT	:	Main	2.5V
VDD	:	Core	1.8V
VDDQ	:	I/O	1.8V
VREF	:	Reference	0.9V
VTT	:	Termination	0.9V

5. Status LED

5-1. Power Input

The power from three systems is supplied through the following pins:

12V : #3
for DAD1000, DMD (12V > 26V)

3.3V : #5
for FPGA Core (3.3V > 1.2V), DMD,
FPGA I/O, RLDRAM (3.3V > 1.8V)

2.5V : #1, #7
for FPGA I/O, OSC

5-2. Voltage converter

The DC-DC converter (U4 / TPS54610PWP) generates the 1.2V power from the 3.3V power for the core power supply of the FPGA.
The DC-DC converter (U5 / TPS54610PWP) generates the 1.8V power from the 3.3V power for the I/O power supply of the FPGA.

6. STATUS LED

The LED “D8” offers the status data relating to the system.
At the time of normal configuration ending, a green indication is given. It does not light in the case of incomplete ending.

ETC PWB(PWC-4715)
KEY-IO PWB/TSENS- PWC/AC PWB/TAMPER- PWB/COVER PWB/PEDE- PWB/SLED- PWB/LSENS PWB/INTER PWB/LIGHT PWB/ACS PWB/MOTOR PWB

PWC#	PWB name	NC3200S	NC2000C	NC1200C	Descriptions
PWC-4715A	KEY-IO PWB	3 model common			The keypad I/F and the On/Off functions and memory of the LIGHT PWB are installed. This memory is a 4K-byte E2ROM connected with the CPU PWB through I2C. A4J1 (CPU) – A5J1 (PJDIV). It contains the serial number and other info singular to the set. Similar memories are also installed in the CPU PWB and the PJDIV PWB. Therefore, if either board should be replaced, the above-mentioned info can be maintained safely.
PWC-4715A~ PWC4715AH	TSENS-A PWB~ TSENS-H PWB	3 model common			The respective models are provided with eight thermometers. The circuit is used in common with the TSEBS-A PWB ~ TSEBS-H PWB. There is no problem even though boards located in different positions are exchanged. (Example: There is no problem even though the TSEBS-B PWB fails and it is replaced with the TSEBS-D PWB that has been intended for a maintenance servicing board.) The temperature sensing range is –10°C ~ +80°C.
PWC-4715B	AC PWB	3 model common			It is used as a relay board for the AC power line. It is located in the middle of the Projector Power SW and the GPSU. Its function is protection against lightning surges, provided with the varistor (between L-L) and the discharge gap (between L-GND).
PWC-4715BA~ PWC-4715BE	TAMPER-A PWB~ TAMPER-E PWB	3 model common			The service door tamper and marriage tamper detector SW is installed. The circuit is used in common for the TAMPER-A ~ TAMPER-E PWB, and there is no problem even though boards located in different positions are exchanged. (Example: There is no problem even though the TAMPER-B PWB fails and it is replaced with the TAMPER-D PWB that has been intended for a maintenance servicing board.)
PWC-4715C	COVER PWB	3 model common			There is a switch for lamp door open/shut detection.
PWC-4715D	PEDE-A PWB	Exclusive	2 model common		The LPSU I/F and the Interlock I/F are provided.
PWC-4715E	PEDE-B PWB	Exclusive	Not required		This is a board to be installed in the LPSU (NC-32PS01). The LPSU control signals from the PEDE-A PWB are delivered top this board through the D-SUB 9pin cable.
PWC-4715F	SLED-A PWB	3 model common			This is a board to be installed on either rear top of the projector, provided with a 2-color Status LED and a buzzer. It is used to repeat the control signals of the SLED-B PWB.
PWC-4715G	SLED-B PWB	3 model common			This is a board to be installed in either opposite position to the rear top of the projector, provided with a 2-color Status LED. The Status LED performs the same operation as that of the SLED-A PWB.
PWC-4715H	LENS PWB	3 model common			There is a function of generating a voltage output in proportion to the brightness of the lamp bulb. This voltage output is A/D-converted at the PJDIV PWB. Using this function, lamp bulb driving is changed to control the brightness as constant.
PWC-4715J	INTER PWB	3 model common			An Interlock Terminal board is installed.
PWC-4715K	LIGHT PWB	3 model common			Two white-color LEDs are installed.
PWC-4715N	ACS PWB	Not required	2 model common		This board is used for the changeover of the AC power line between the C1 connection and the C2 connection. At the time of shipment, the C1 connection is provided.
PWC-4715P	MOTOR PWB	Exclusive	Not required		The A/D is installed to read out the position data and drive the motor for the NC3200S lens and the lens mount. The A/D has a definition (resolution) of 12bit, applicable to the 4096-dot projector.

1. Explanation of pictograms used in the Assembly Layout

Instruction diagram

Pictogram	Name and meaning	Pictogram	Name and meaning
[N·m]	Using the motor-powered torque driver, fasten a screw at the specified torque.		Use a wrist strap.
[N·m]	Using the manual torque driver, fasten a screw at the specified torque.		Wear gloves.
	Hold the installing part while it is pressed upwards.		Use a finger coat.
	Hold the installing part while it is pressed downwards.		Wear a mask.
	Hold the installing part while it is pressed to the left.		Conform to other specifications.
	Hold the installing part while it is pressed to the right.		Remove contaminants by means of compressed air.
	Hold the installing part while it is turned counterclockwise.		Remove contaminants by means of statically eliminated air blast.
	Hold the installing part while it is turned clockwise.	9221144	Soak the wiping cloth (made by SOLIV: Kuraray Kuraflex) with anhydrous alcohol (922 1448) and use it for wiping off.
	Apply an adhesive agent.	PICLS	Read out a barcode with the barcode reader and enter the data in PICLS.
	Peel the protection sheet off the part.	Protection glasses	Wear the protection glasses.
EMI	EMI Mark		

2. SET ASSY

	Diagram symbol	Circuit symbol	Part name	Part number	Q'ty	Remarks
	①		TSENS-A PWB ASSY | TSENS-H PWB ASSY	81T19ZAA | 81T19ZAH	6	TSENS PWB
	②		FIXING BRACKET(TEM A)	24H67861	4	
	③		FIXING BRACKET(TEM B)	24H67871	1	
	④		FIXING BRACKET(TEM C)	24H68441	1	
	⑤	CN1-2	CN4 (CN1-2)60X,1571-26	7NW4H001	5	
	⑥		PL-CPIMS*3*8*3GF	24V00111	6	Torque management S47001、S46001、S45001

[TEMP SASSY] (4set)

[1] Mount the TSENS PWB on the Fixing bracket (TEM A)

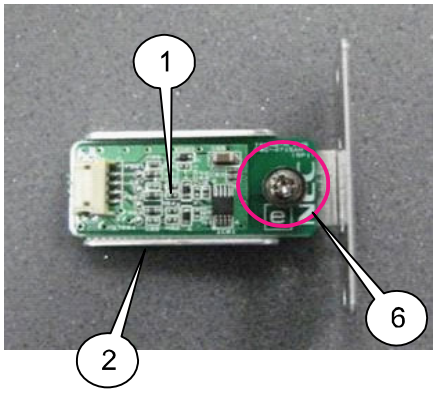

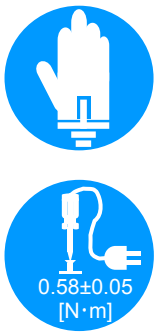

[2] Insert the CN (CN1-2) in the TSENS PWB and fit the opposite side to the bracket.

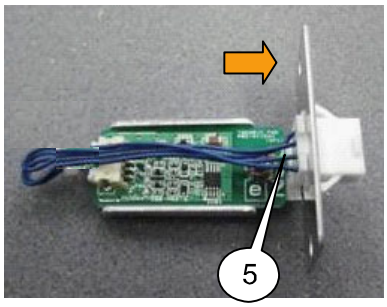

Insert the Connector in the arrow direction.

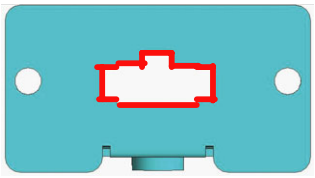

According to the notch shape of the bracket, insert the connector. (Upper embossed part)

[TEMP(BASE) SASSY] (1set)

[Mount the TSENS PWB on the Fixing bracket (TEM B).

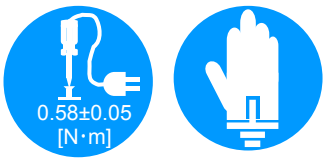

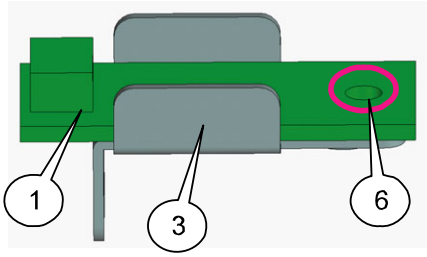

[TEMP(LAMP) SASSY]

[1] Mount the TSENS PWB on the Fixing bracket (TEM C).

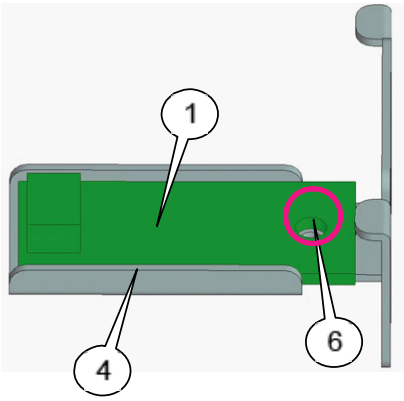

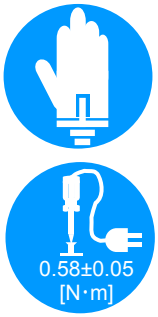

[2] Insert the CN (CN1-2) in the TSENS PWB and fit the opposite side to the bracket.

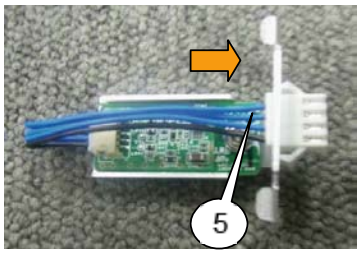

Insert the Connector in the arrow direction.

According to the notch shape of the bracket, insert the connector. (Lower embossed part)

3. SET ASSY

	Diagram symbol	Circuit symbol	Part name	Part number	Q'ty	Remarks
	①		TAMPER-A PWB ASSY | TAMPER-E PWB ASSY	81T19ZBA | 81T19ZBE	3	TAMPER PWB
	②		FIXING BRACKET(TAMP C)	24H67831	2	
	③		FIXING BRACKET(TAMP D)	24H67841	1	
	④		CBIMS*2*8*3GF	24V01031	6	Torque management
	⑤	K60085	GLUE,SCREW LOCK	92201082		Amount used = approx. 0.02g×6 points

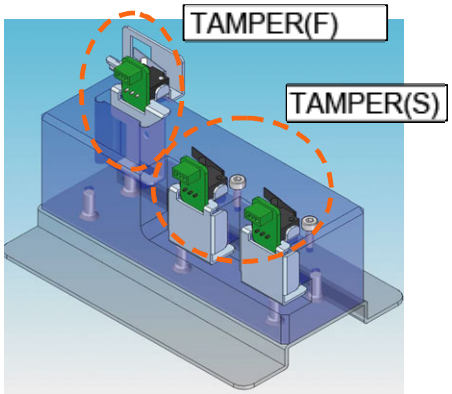

Acceptable even though any of the Tamper-A ~ Tamper-E is used.

[TAMPER(S) SASSY]

[1] Mount the Tamper PWB on the Bracket (TAMP C).
Apply GLUE SCREW LOCK after mounting.

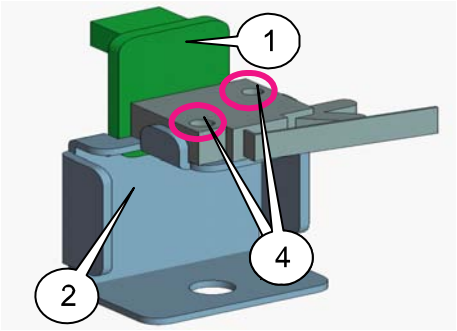

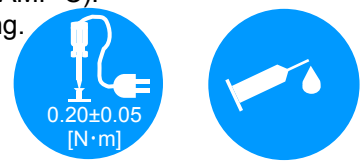

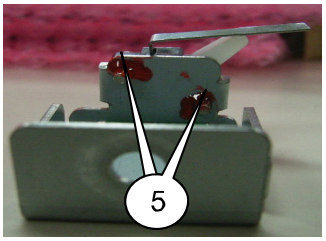

Apply glue and screw lock to the reverse side.

[TAMPER(F) SASSY]

[2] Apply GLUE SCREW LOCK after mounting.
Apply GLUE LOCK after mounting.

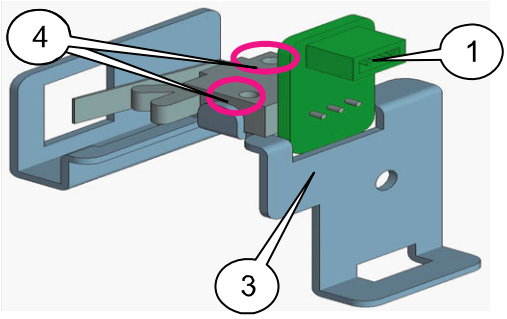

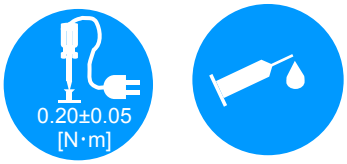

Apply glue and screw lock to the reverse side.

4. SET ASSY

	Diagram symbol	Circuit symbol	Part name	Part number	Q'ty	Remarks
	①		DFU-50X2P+MBT-60AEX1P	7N120016	1	
	②		FILTERS NAC-30-472	6N120104	1	
	③		IELHK-1-11-61-50A	6N500018	1	
	④	FG1	CN WIRE(FG1)170W,1283-8	7NN1N054	1	[TERM]-[GND]
	⑤	AC4	CN2P(AC4)500W,1283-8	7NN2N011	1	[NF LOAD]-[CB LINE]
	⑥	AC5	CN2P(AC5)1200W,1015-12	7NN2N012	1	[CB LOAD]-[LPSU]
	⑦	AC8	CN5-WP(AC8)280W,1015-18	7NA5N002	1	[NF LOAD]-[ACS PWB]

[1] Mount the CN(FG1) to the terminal.
Mount the CN(AC4) and CN(AC8) to the side of the noise filter.
Tighten the CN (AC4) and the CN (AC8) together.

At the time of screw tightening, shift the insulation cover and install the terminal. After that, return the insulation cover to its original position.

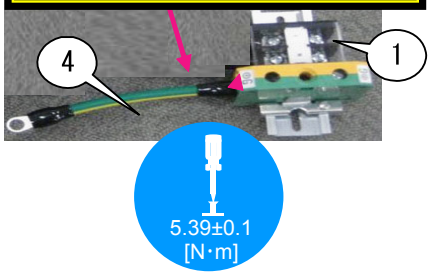

Tool: Tip No.2 driver bit

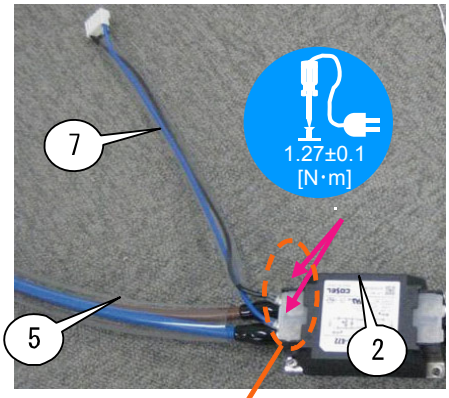

Pay attention to the NF

Install the terminals so that they are joined back to back.

[2] Install the CN (AC5) on the load side of the circuit breaker and the opposite side of the CN (AC4) on the line side.

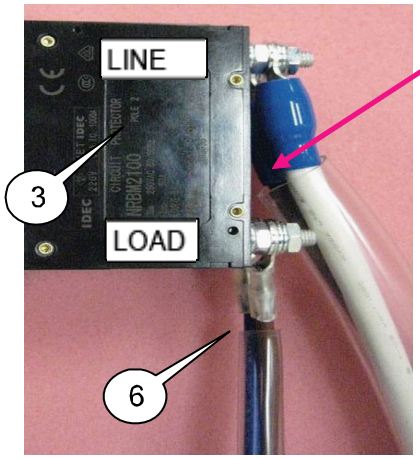

CN(AC4)

Tool: OS 7 mm box driver

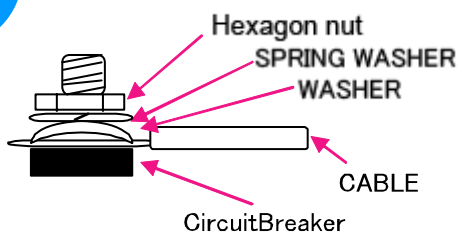

5. SET ASSY

	Diagram symbol	Circuit symbol	Part name	Part number	Q'ty	Remarks
	①		1120-F150-P1T1-WA0000-10A	6N500027	1	
	②	AC6	CN5-WP(AC6)650W,1015-16	7NA5W001	1	
	③	AC2	CN3-WP(AC2)740W,1015-16	7NA3W001	1	
	④		CN WIRE65W 1283-8	7NN1N057	2	

[1] Mount the CN WIRE65W 1283-8 to the noise filter and terminal.
Fasten it temporarily because positional adjustments have to be carried out later.

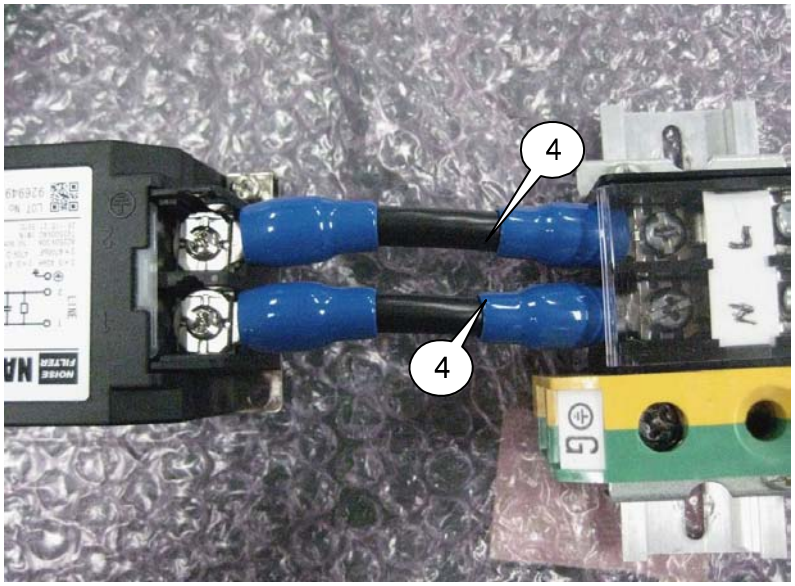

[2] Mount the CN(AC6) and CN(AC2) to the 1120-F150-P1T1-WA0000-10A.
Check that the connector is inserted assuredly.

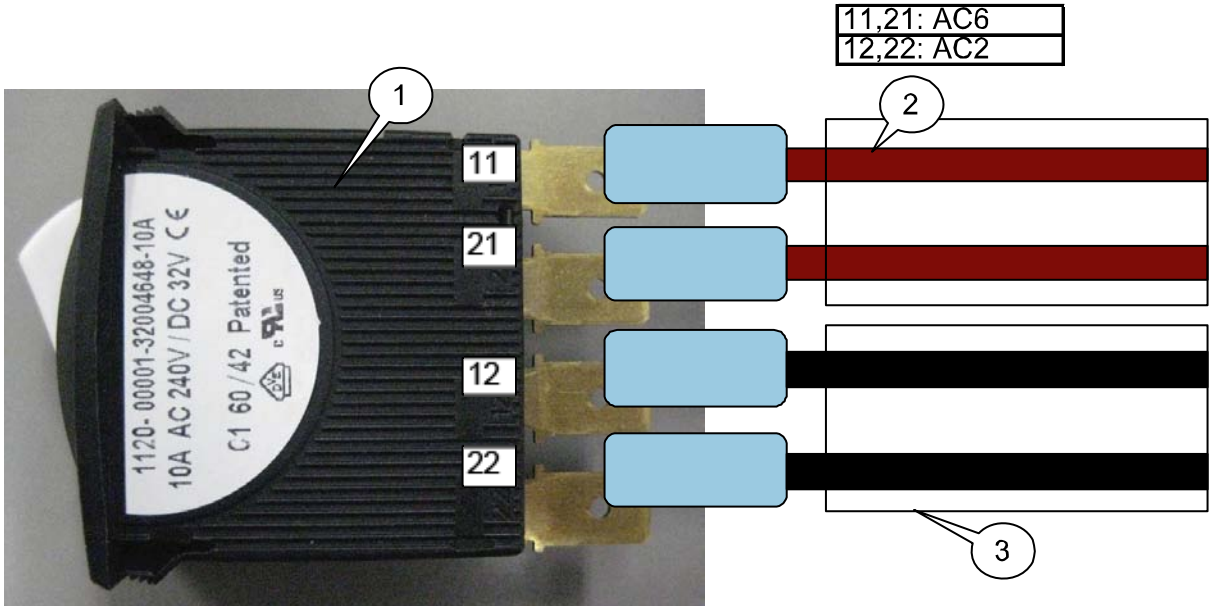

6. DUCT (DMD FAN) SASSY

	Diagram symbol	Circuit symbol	Part name	Part number	Q'ty	Remarks
	①		DUCT(PWB FAN) ASSY	24HS4871	1	
	②	K70003	DC FAN 3610KL	3N170151	1	
	③	K70004	DC FAN 4715KL	3N170152	1	
	④		PL-CPIMS*4*35*3KF	24V01021	2	Torque management
	⑤	S70003	HHCS*4*10*3GF	24V00441	2	Torque management

[1] Mount the DC fan 4715KL to the Duct (PWB FAN) Assy.

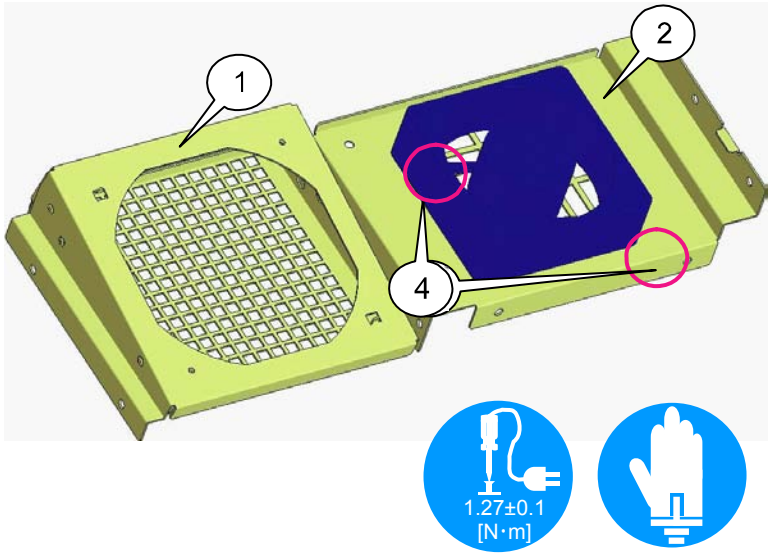

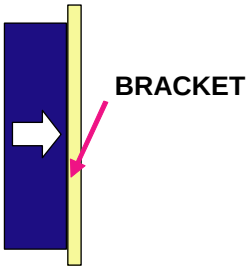

Install it so that the arrow mark for showing the direction of the fan wind is faced to the bracket.

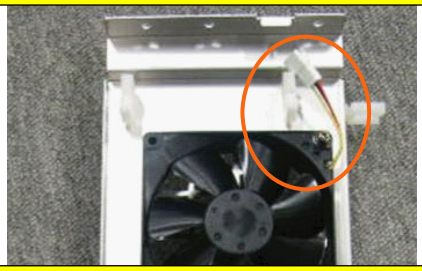

Lay cables so that they are positioned as shown in the photo above.

[2] Mount the DC fan 3610KL to the Duct (PWB FAN) Assy.

Tool: 3mm dia. tip hexagon bit

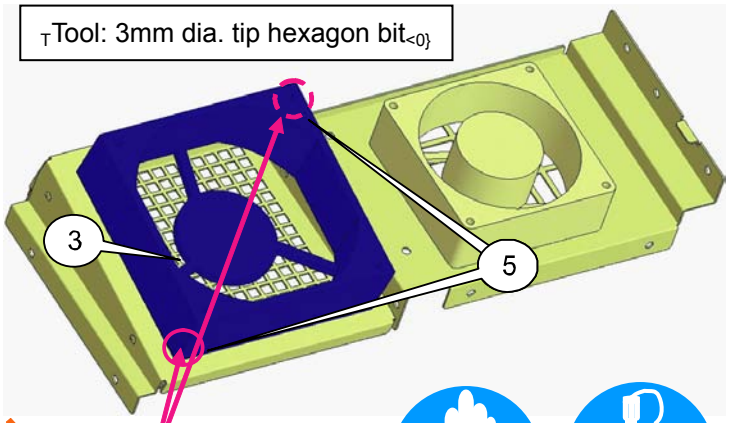

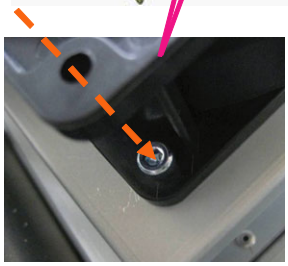

Pass a screwdriver through the upper hole to tighten it with

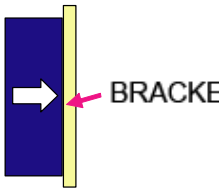

Install it so that the arrow mark for showing the direction of the fan wind is faced to the bracket.

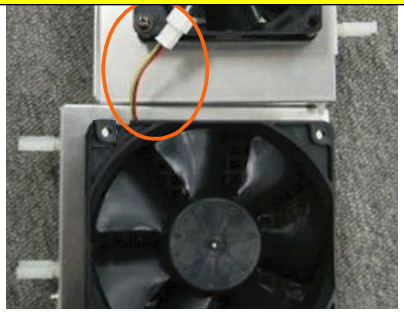

Lay cables so that they are positioned as shown in the photo above.

7. DUCT (DMD FAN) SASSY

	Diagram symbol	Circuit symbol	Part name	Part number	Q'ty	Remarks
	①		TEMP SASSY		1	
	②		PL-CPIMS*3*8*3GF	24V00111	2	Torque management
	③		WIRE SADDLE(C)	16287421	9	

[1] Mount the TEMP Sassy to the lower side of the duct (PWB FAN) Assy.

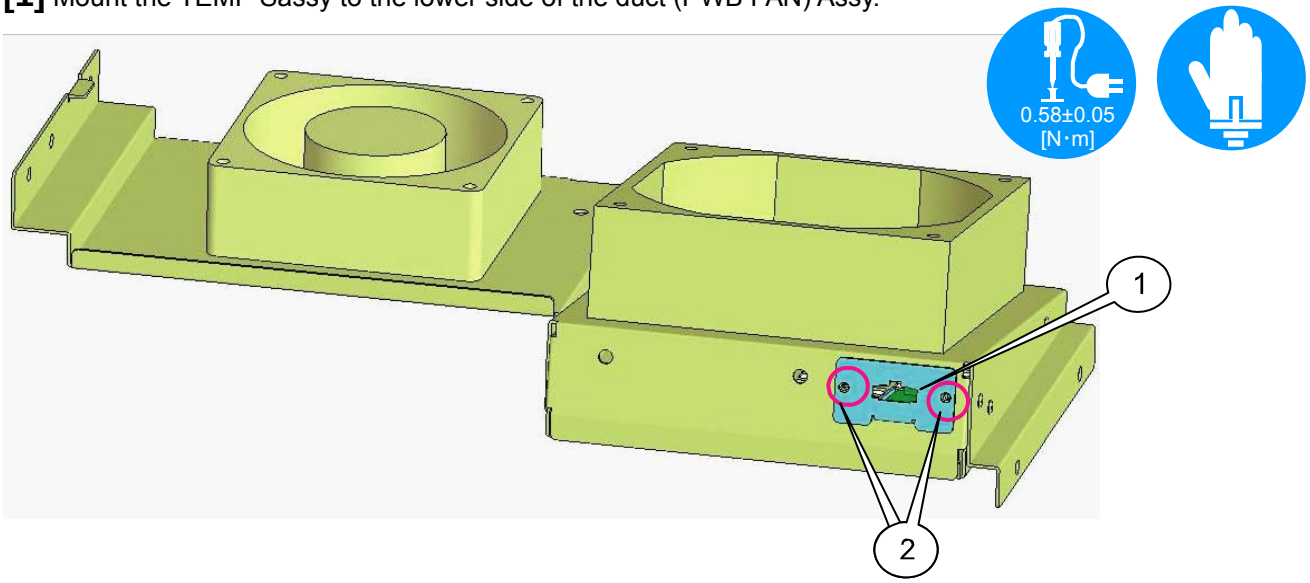

[2] Mount the wire saddle (C) to the Duct (PWB FAN) Assy. (9p)

Front side (5p)

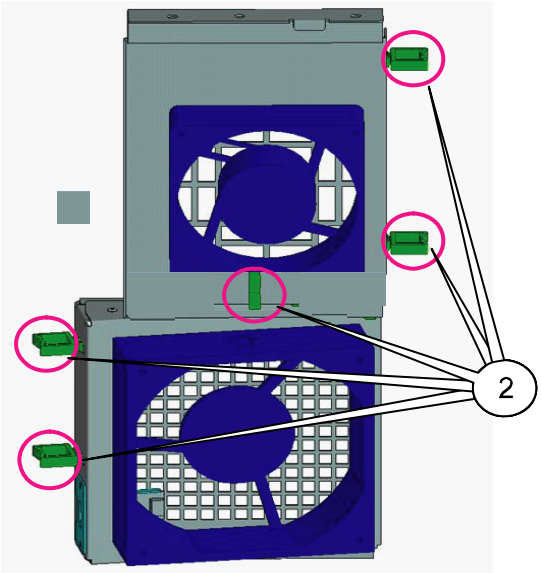

Rear side (5p)

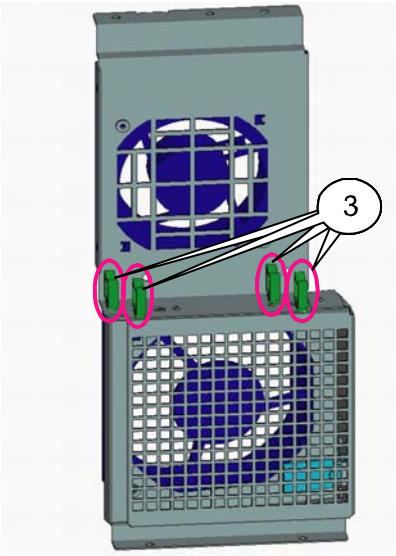

8. SET PS SASSY

	Diagram symbol	Circuit symbol	Part name	Part number	Q'ty	Remarks
	①		POWER SUPPLY AC6-O2H2E-00	3N101401	1	
	②		FIXING BRACKET(SET PS)	24H67711	1	
	③	S88001	PL-CPIMS*4*8*3GF	24V00591	4	Torque management
	④	PSM1	CN8-WP(PSM1)270X,1007-28	7NW8W035	1	
	⑤	P12-1	NC6-WP(P12-1)440W 1015-12	7NW6N003	1	
	⑥	P24-1	CN6-WP(P24-1)460W,1007-18	7NW6N004	1	
	⑦	AC1	CN5-WP(AC1)330W1015-18	7NA5N001	1	

[1] Mount the fixing bracket (SET PS) to the power supply AC6-O2H2E-00.

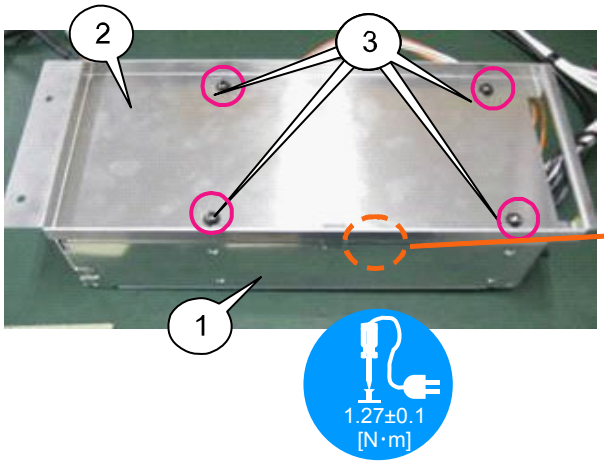

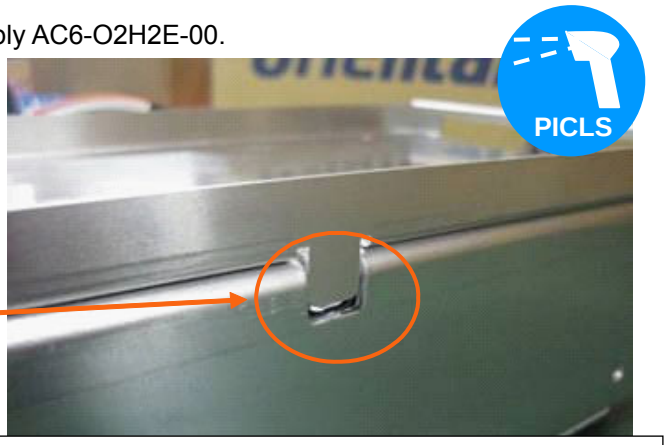

For the purpose of positioning, apply a bent section of the bracket to the missing section of the power supply.

[2] Mount the CN(PSM1), CN(P12-1) CN(P24-1) and CN(AC-1) to the AC PS.
When laying wires on the rear side, white-colored wires should be positioned on upper level (+) and all wires other than white be positioned on lower level.
When the upper connector is installed, the terminal should be positioned slantwise.

Rear side

* There shall be no slacks in cables.

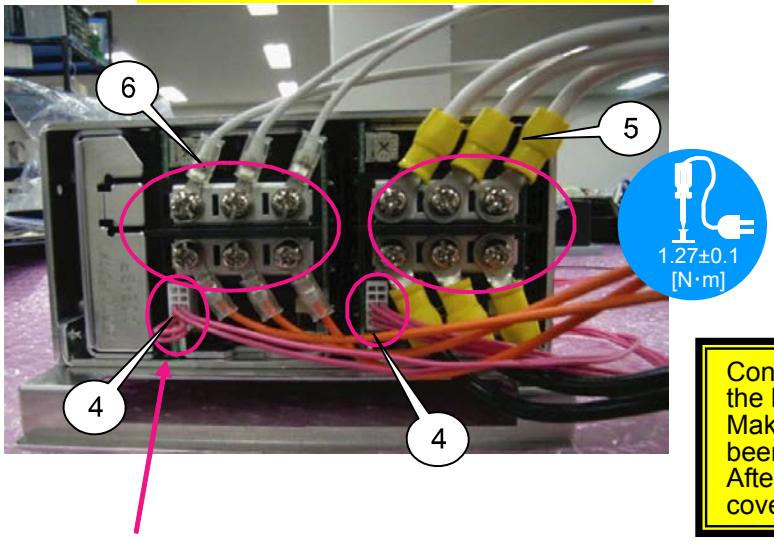

Front side

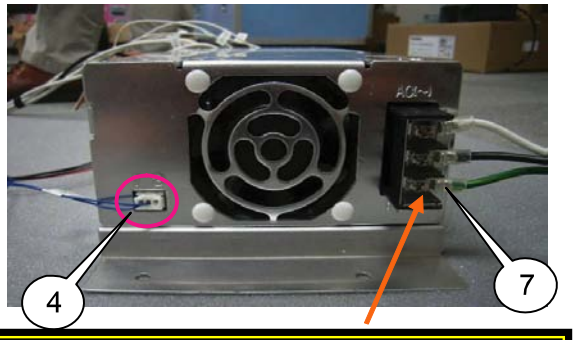

Connect the green/yellow wire of AC1 to GND of the PS.
Make screw fastening after the clear cover has been removed.
After the completion of work, install the clear cover.

Insert the jumpered side of the CN (AC1) in the left side post as seen from behind.

9. SET PS SASSY

	Diagram symbol	Circuit symbol	Part name	Part number	Q'ty	Remarks
	①	K88002	BAND(L=100 T18R)	24C09121	2	

[1] Bind the cables laid on the rear side as stated above by means of wire harness bands, and lay them by the side.
Cut off the surplus parts of the bands.

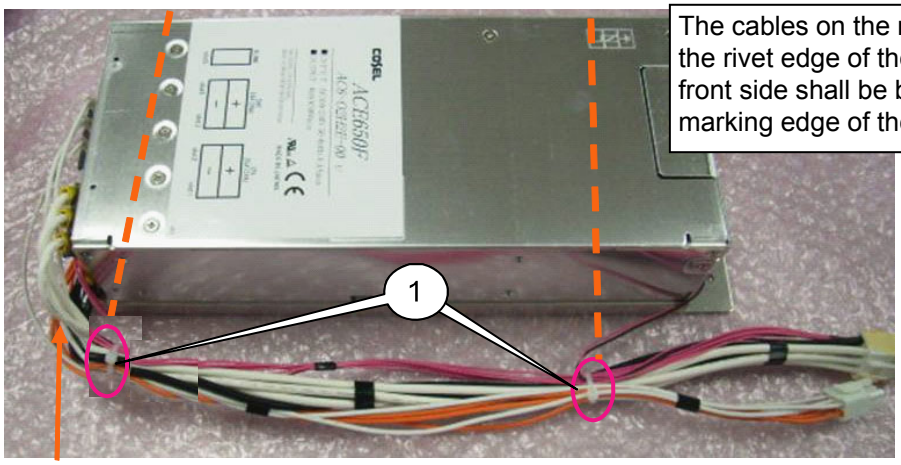

The cables on the rear side shall be bundled based on the rivet edge of the power supply, and those on the front side shall be bundled based on the engraved marking edge of the power supply.

Fix the cables with bands so that they do not droop down to the lower side.

10. AC PWB SASSY

	Diagram symbol	Circuit symbol	Part name	Part number	Q'ty	Remarks
	①		FIXING BRACKET(AC PWB)	24H67731	1	
	②		AC PWB ASSY	81T19ZB1	1	
	③	S89001	PL-CPIMS*3*8*3GF	24V00111	6	Torque management
	④	K89002	WIRE SADDLE(C)	16287421	2	
	⑤	K89003	EDGE SADDLE(EDS1717U)	24C04371	1	
	⑥	P24	CN6-WP(P24)850W,1007-18	7NA6W001	1	
	⑦	P12	CN6P(P12)400W,1015-12	7NW6W041	1	
	⑧	PSM	CN8P(PSM)880W,1007-28	7NH8W001	1	

[1] Mount the AC PWB, wire saddle (C) and edge saddle (EDS1717U) to the fixing bracket (AC PWB).

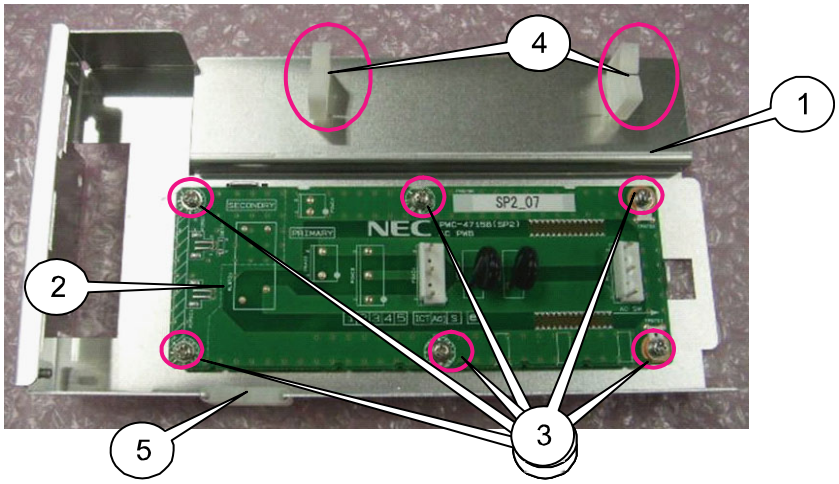

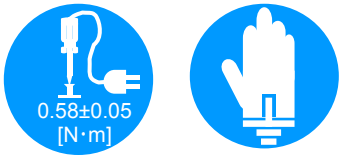

[2] Fit the housing of the CN (P24), the CN (P12), and the CN (PSM) in the fixing bracket (AC PWB), and lay cables through the wire saddles (C).
When fitting it in the bracket, confirm the shape of the housing and fit it in the notch in the same shape.

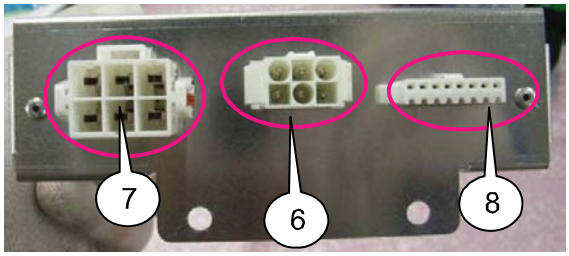

For cable binding, the CN (PSM) of thin cables should be positioned on the lower side.

11. SET ASSY

	Diagram symbol	Circuit symbol	Part name	Part number	Q'ty	Remarks
	①	K60093	POWER SUPPLY KSX-4001MPNE	3N190011	1	
	②		Bracket 1		1	
	③		Bracket 2		1	
	④		Bracket 3		1	
	⑤		Bracket 4		1	
	⑥		Screw M5		8	Torque management

[1] Mount the supplied plate to the ballast PS.

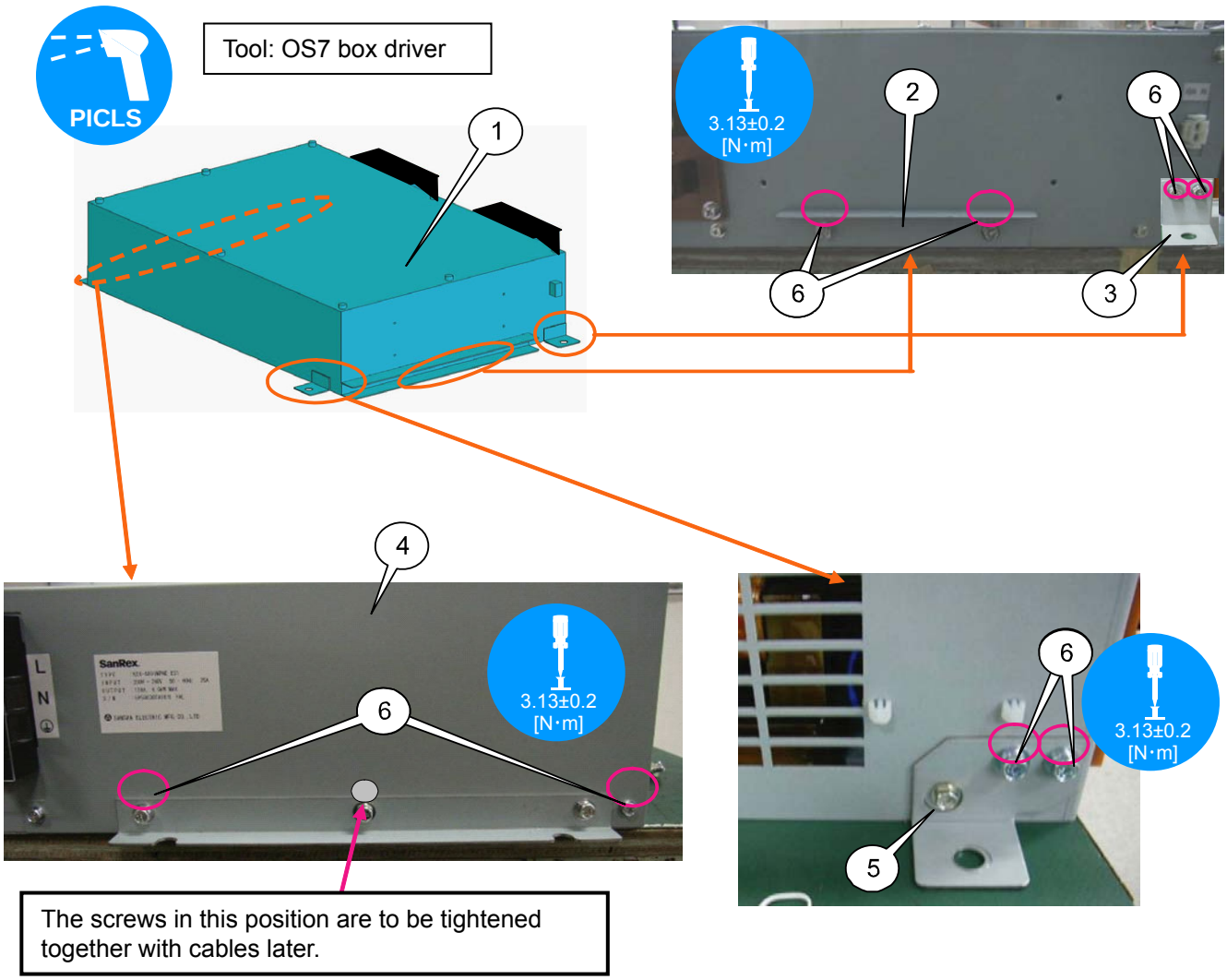

12. SET ASSY

	Diagram symbol	Circuit symbol	Part name	Part number	Q'ty	Remarks
	①	K60092	IGNITER SS-140GMNE	3N101251	1	
	②		Bracket 4		1	
	③		Bracket 5		1	
	④		Bracket 6		1	
	⑤		Screw M8		2	Torque management
	⑥		Cable		1	
	⑦	S60021	PL-CPIMS*4*16*3GF	24V00471	4	

[1] IMount the supplied plate to the igniter SS-140GMNE with supplied screws.

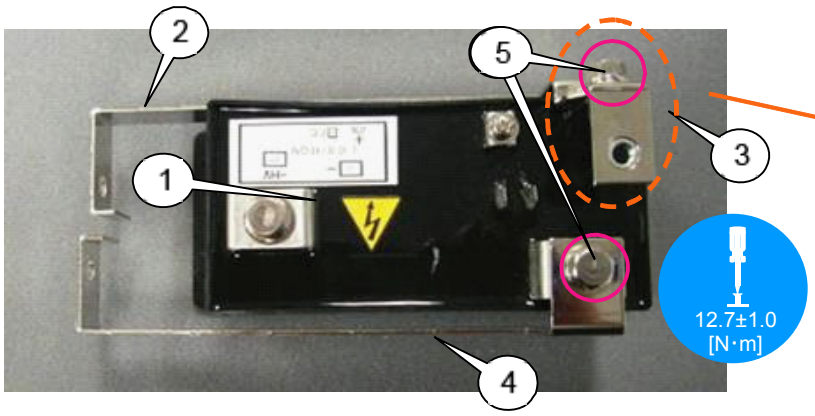

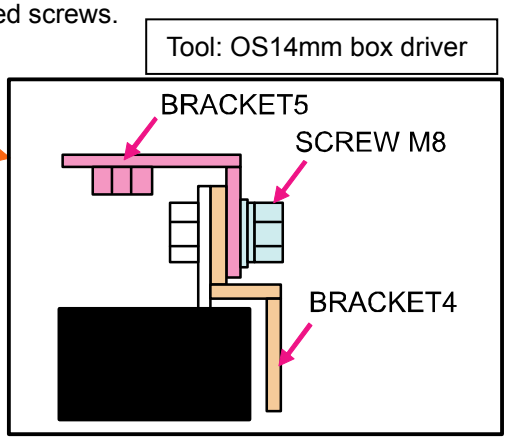

[2] Insert the supplied cable into the igniter SS-140GMNE.

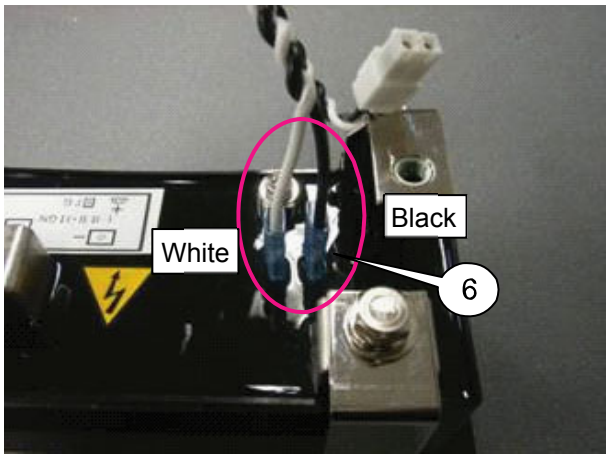

[3] Mount the igniter SS-140GMNE to the power supply KSX-4001MPNE.
Remove the LPSU screws on the left side. After the igniter plate has been adjusted, tighten it with the removed screws.

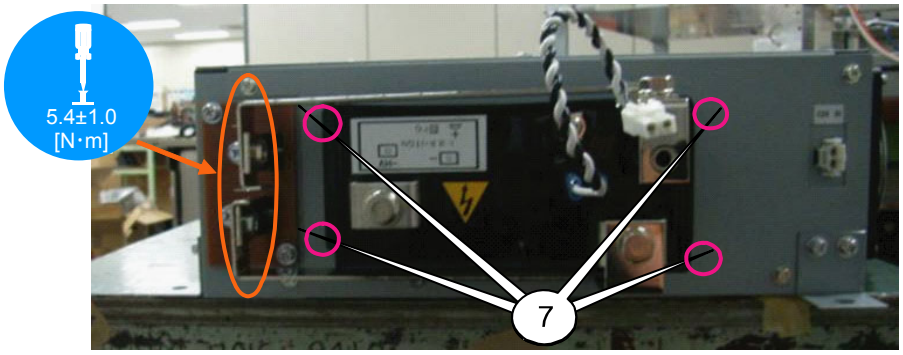

13. SET ASSY

	Diagram symbol	Circuit symbol	Part name	Part number	Q'ty	Remarks
	①	FG3	CN WIRE(FG4)180W,1015-12	7NN1N056	1	
	②		Screw M5		1	Torque management

[1] Insert the cable, which has been inserted in the igniter as described on the previous page, in the connector of the power supply.

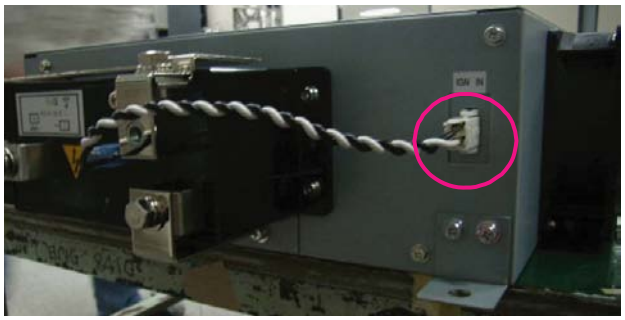

[2] Mount the CN(FG4) to the power supply.

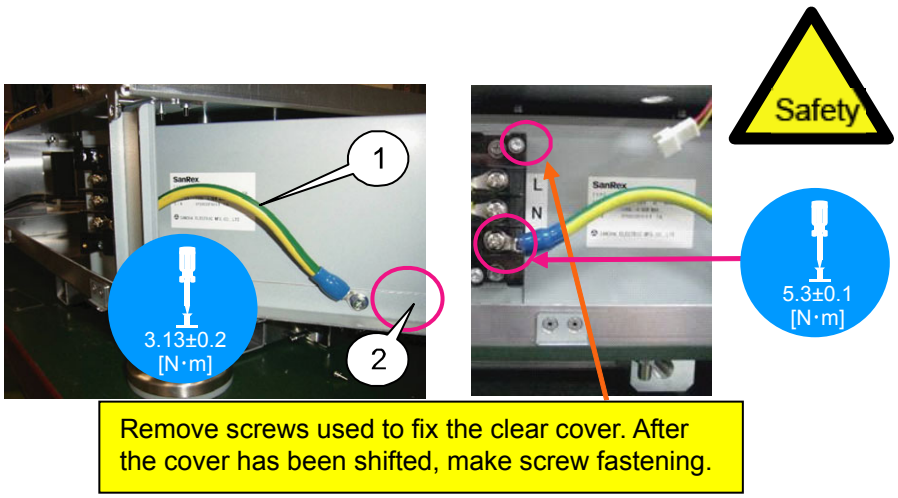

14. DUCT (DMD FAN) SASSY

	Diagram symbol	Circuit symbol	Part name	Part number	Q'ty	Remarks
	①		DUCT(DMD FAN)C	24H67541	1	
	②		DUCT(DMD FAN) ASSY	24HS4841	1	
	③	S69002	PL-CPIMS*4*10*3KF	24V00461	4	Torque management
	④	K69002	CUSHION(T3)	24J37271	4	
	⑤	K69004	DC FAN 4715KL	3N170152	1	
	⑥	K69003	GUARD(FAN)	12265641	1	
	⑦	S69003	HHCS*4*10*3GF	24V00441	2	
	⑧	K69007	BAND(L=100 T18R)	24C09121	2	

[1] Mount the Duct (DMD FAN) C and cushion to the Duct (DMD FAN) Assy.

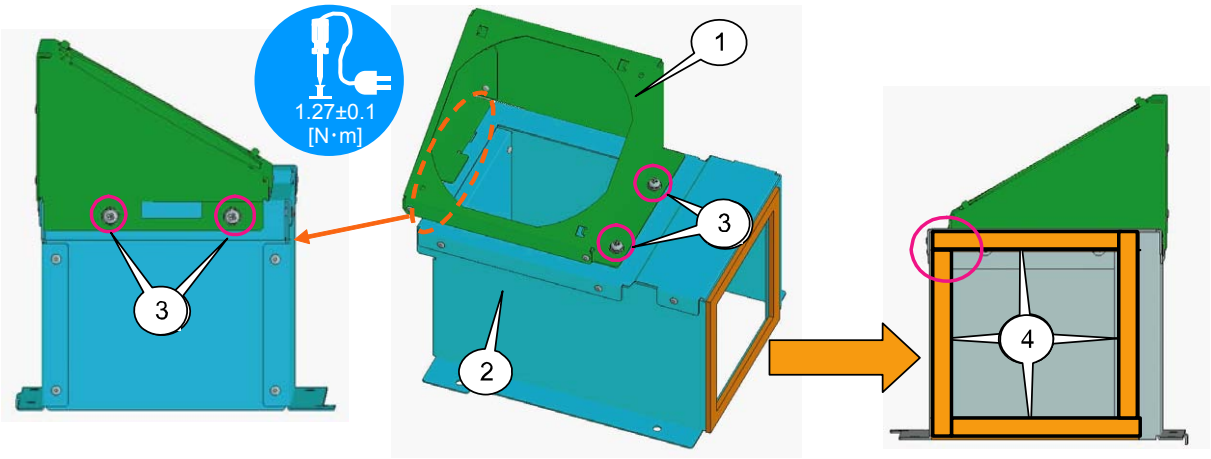

[2] Mount the DC fan 4715KL to the Duct (DMD FAN) C.
Mount the guard (fan) on the fan and fix it with a band, with the convex surface faced to the outside.
Fasten the band where there is no screw fastening. Cut off the surplus part of the band.

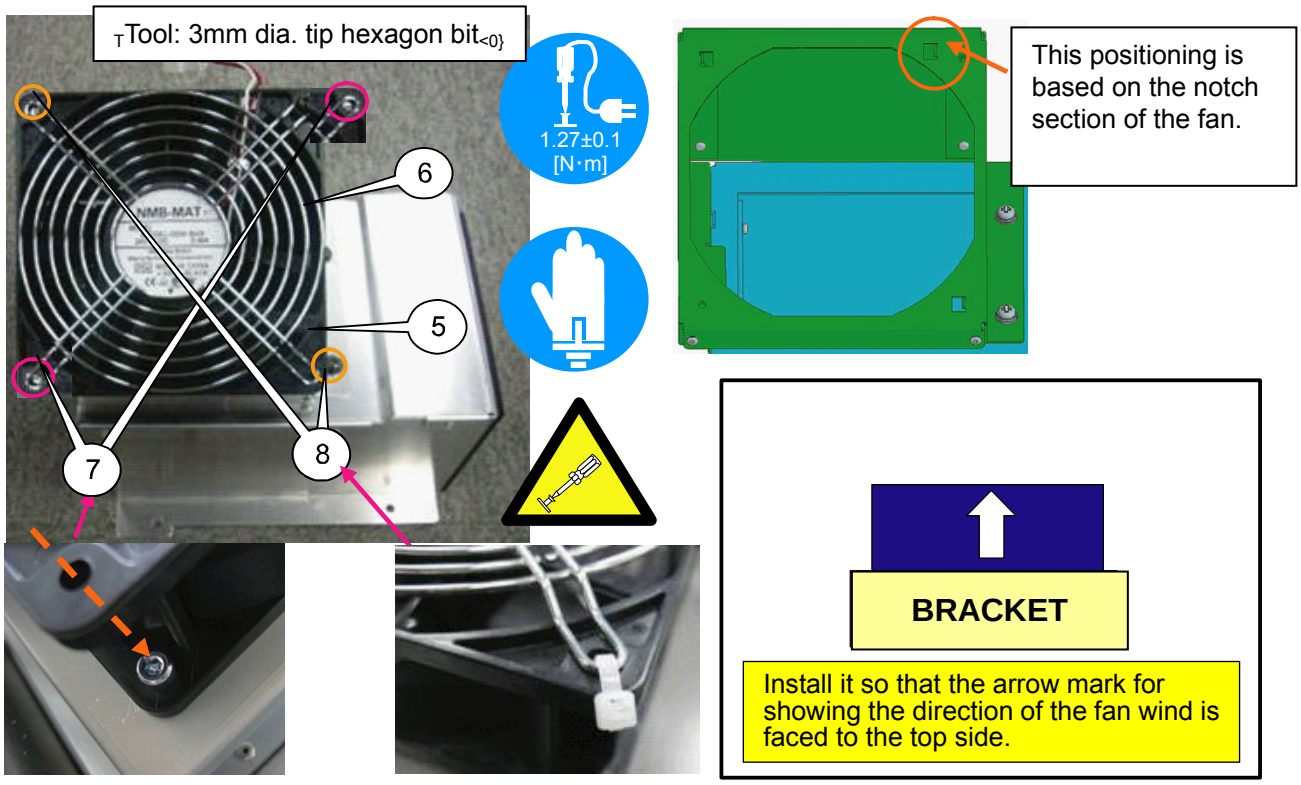

15. SET ASSY

	Diagram symbol	Circuit symbol	Part name	Part number	Q'ty	Remarks
	①		CHASSIS BASE ASSY	24HS4792	1	
	②		TEMP(BASE) SASSY		1	
	③	S60049	PL-CPIMS*4*10*3KF	24V00461	1	Torque management

[1] Mount the TENS B Sassy to the chassis base Assy.

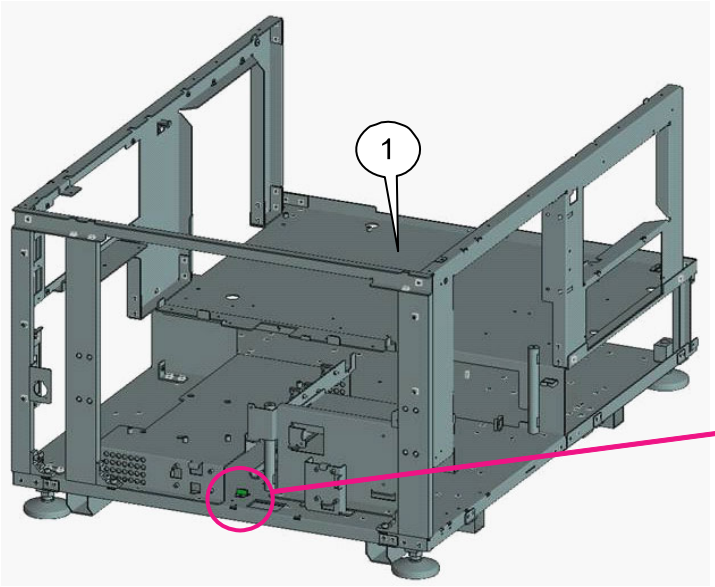

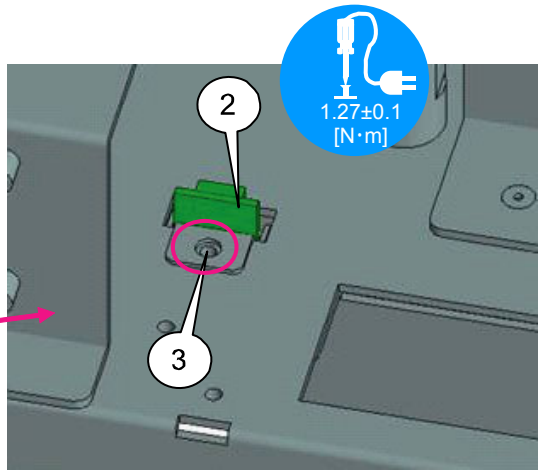

16. SET ASSY

	Diagram symbol	Circuit symbol	Part name	Part number	Q'ty	Remarks
	①		WIRE SADDLE(C)	16287421	19	
	②		EDGE SADDLE(EDS1717U)	24C04371	7	

[1] Mount the wire saddle (C) and edge saddle to the chassis base Assy. (1/2)

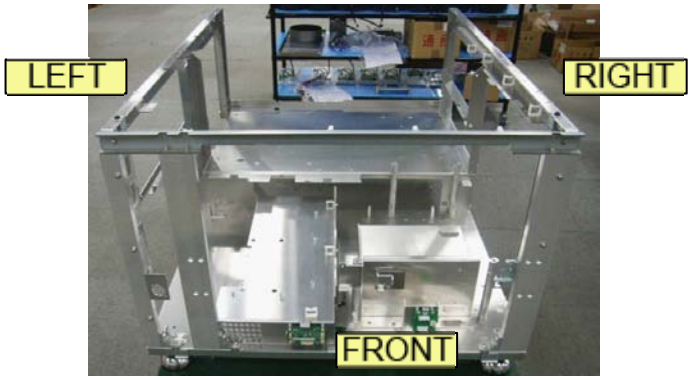

・[Center of right side] Vertical frame

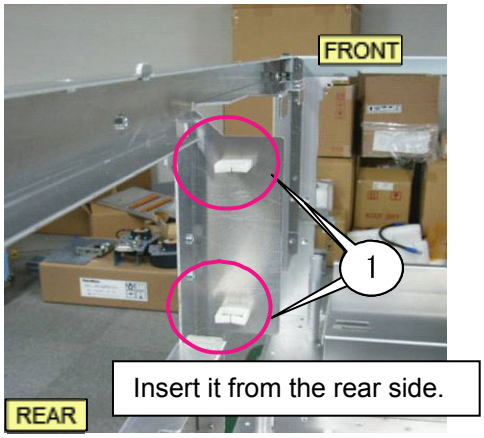

・[Right - Front] Upper frame

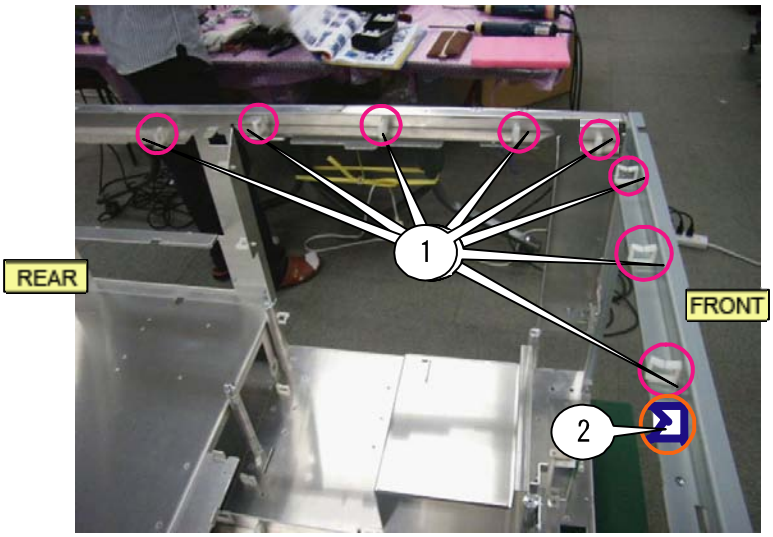

・[Left] Frame

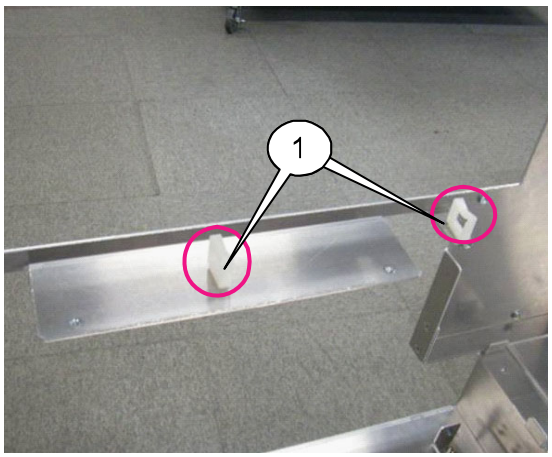

17. SET ASSY

	Diagram symbol	Circuit symbol	Part name	Part number	Q'ty	Remarks

[1] Mount the wire saddle (C) and edge saddle to the chassis base Assy. (2/2)

・[Front - Center] Lower base

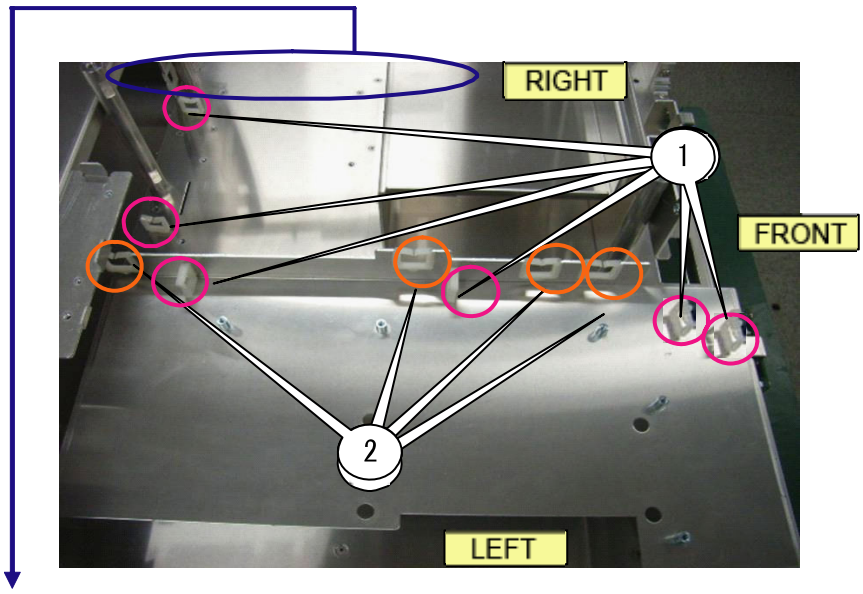

・[Right] Lower base

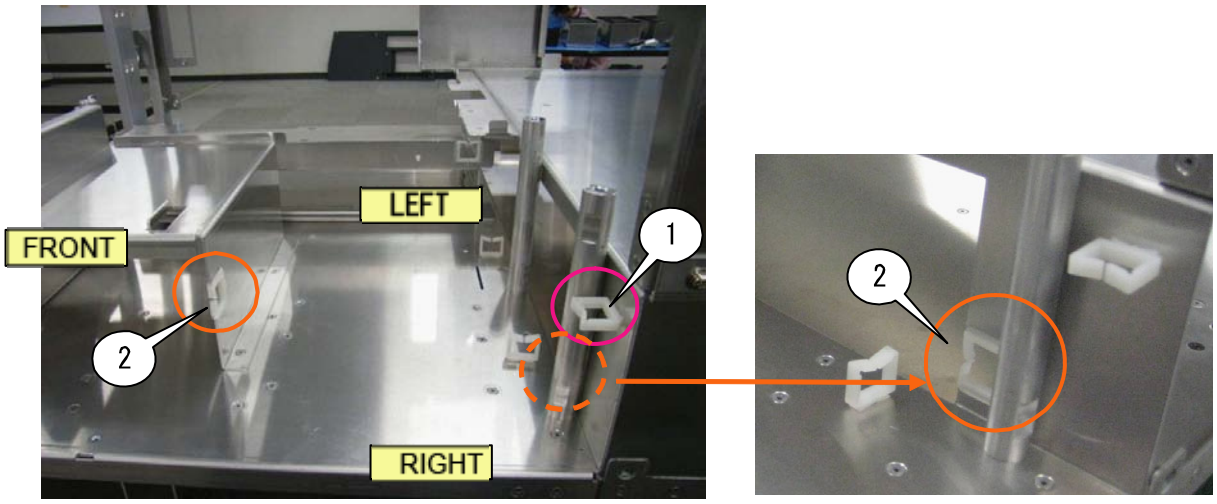

18. SET ASSY

	Diagram symbol	Circuit symbol	Part name	Part number	Q'ty	Remarks
	①		TAMPER(S) SASSY		2	
	②		TAMPER(F) SASSY		1	
	③		PL-CPIMS*4*10*3KF	24V00461	3	Torque management

[1] Mount the Tamper SW Sassy assembled in the previous page to the Set Assy.

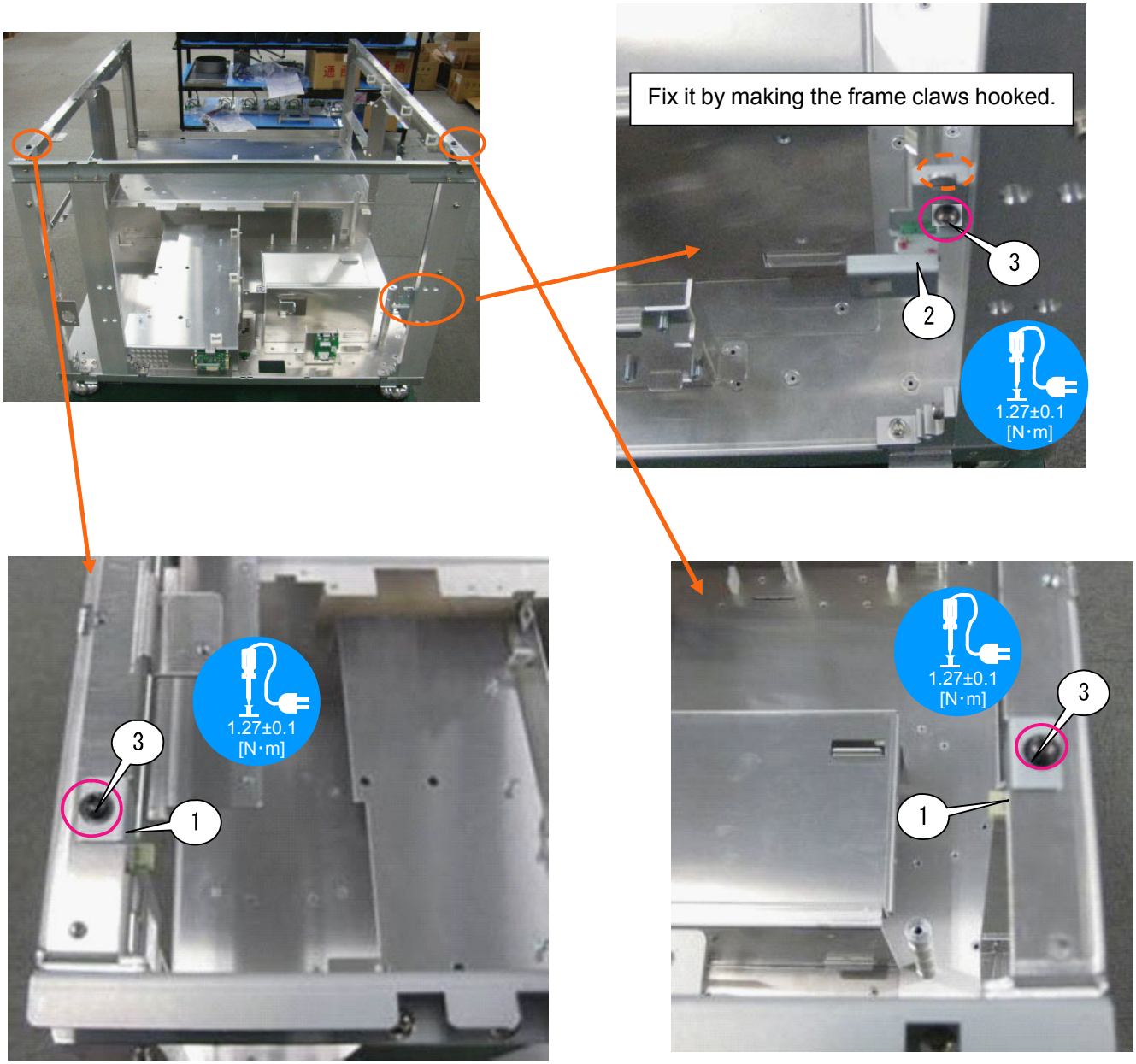

19. SET ASSY

	Diagram symbol	Circuit symbol	Part name	Part number	Q'ty	Remarks
	①	K80001	DUCT(ROD FAN) ASSY	24HS4861	1	
	②	K79001	DUCT(CM FAN) ASSY	24HS4851	1	
	③		CUSHION	24C09141	8	K80003、K79003
	④		COLLAR	24C09171	8	K80002、K79002
	⑤		PL-CPIMS*3*15	24V00251	8	Torque management, S60070, 71

[1] Mount the CUSHION, COLLAR and SCREW to DUCT(ROD FAN) Assy and DUCT(CM FAN) Assy.

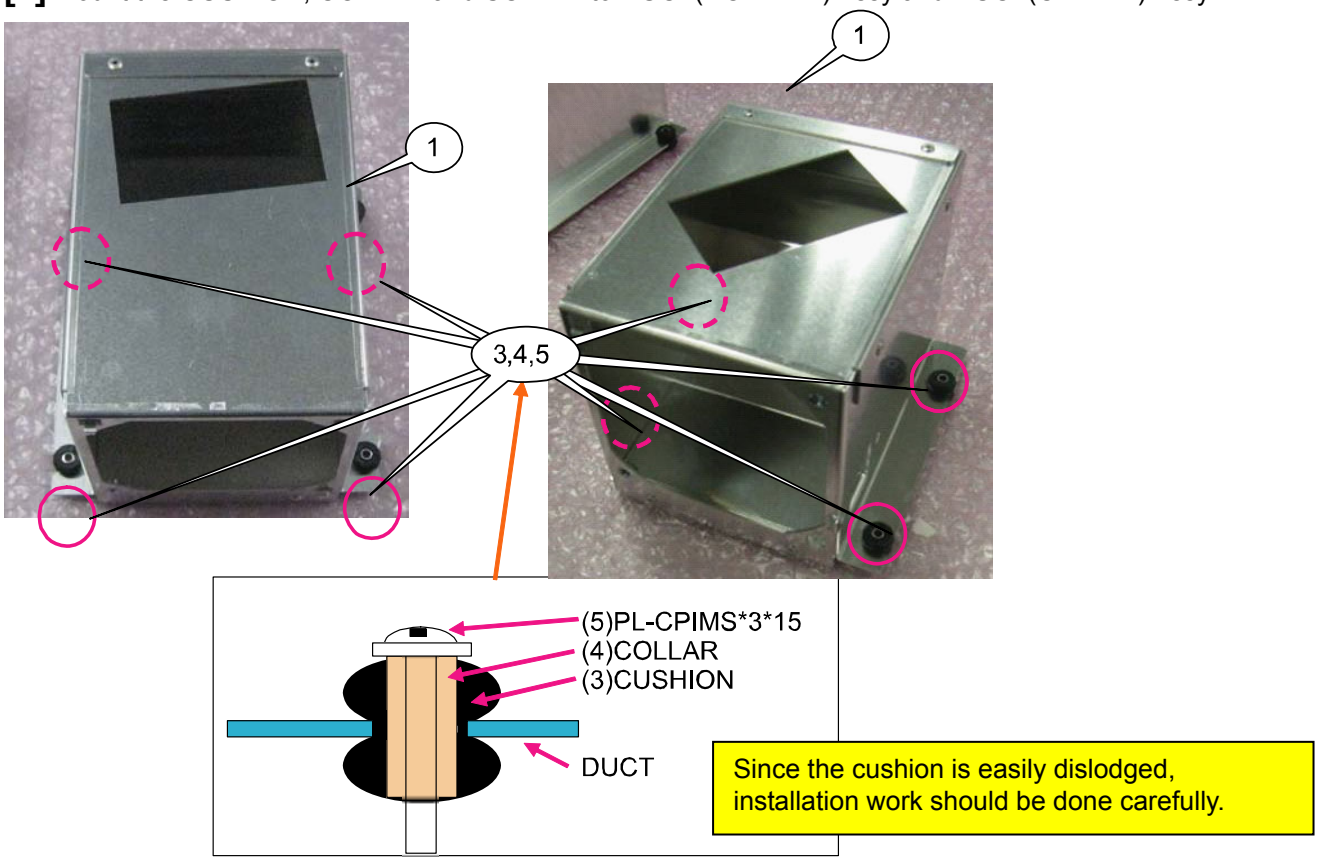

[2] Mount the Duct (ROD FAN) Sassy and Duct (CM FAN) Sassy to the Set Assy.
Screw fastening shall be carried out in the order as illustrated.

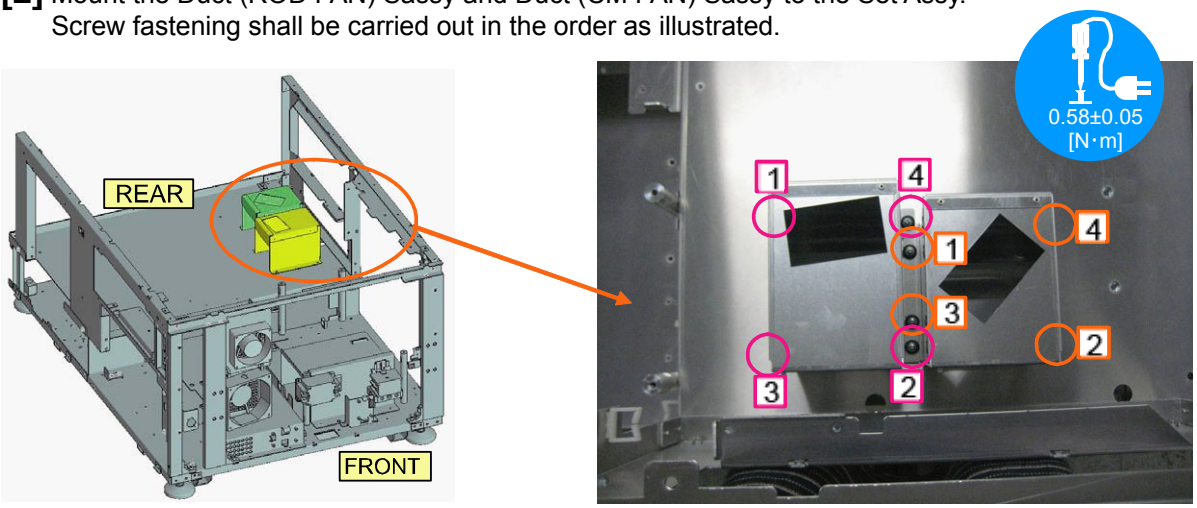

20. SET ASSY

	Diagram symbol	Circuit symbol	Part name	Part number	Q'ty	Remarks
	①		TEMP SASSY		1	
	②	S60050	PL-CPIMS*3*8*3GF	24V00111	2	Torque management

[1] Mount the TENS A Sassy to the Duct (CM FAN) Assy.

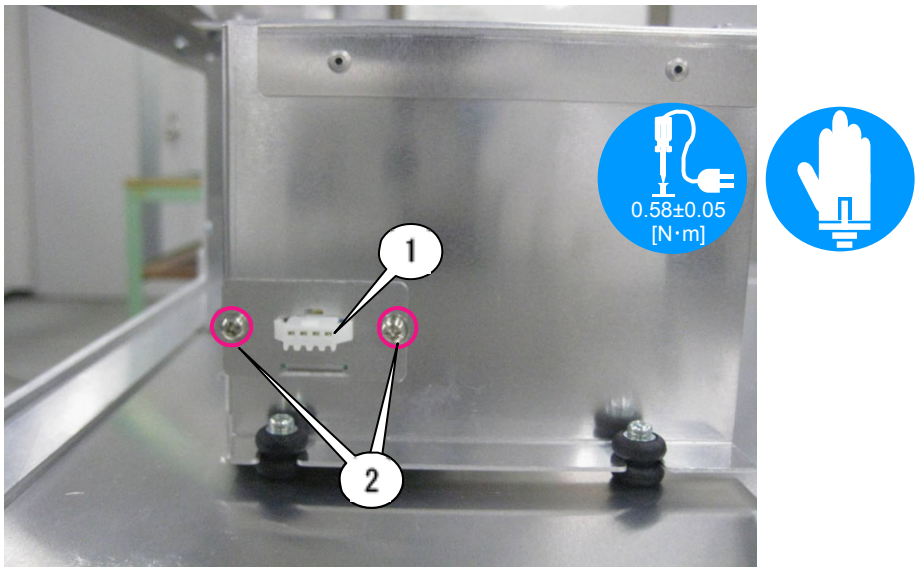

21. SET ASSY

	Diagram symbol	Circuit symbol	Part name	Part number	Q'ty	Remarks
	①	S60016	PL-CPIMS*4*10*3KF	24V00461	2	Torque management
	②	S60015	PL-CPIMS*4*10*3KF	24V00461	2	Torque management
	③	S60079	PL-CPIMS*6*14*3KF	24N02981	1	Torque management
	④	S60080	WASHER,PIWA*6*3KF	24V00871	1	
	⑤	S60012	CFIMS*3*6*3KF	24V00421	4	Torque management

[1] Mount the terminal, noise filter and circuit breaker to the chassis base Assy.

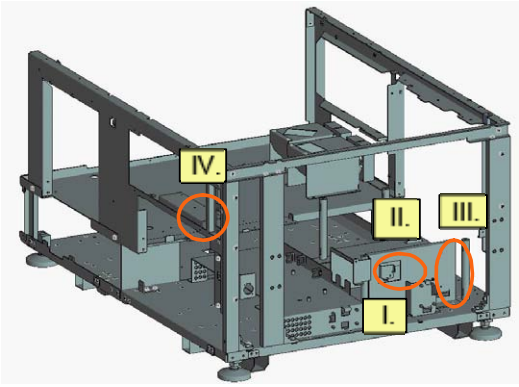

I. Before installing the noise filter, pinch the CN (FG1) with a screw and a washer and then install it on the chassis base.

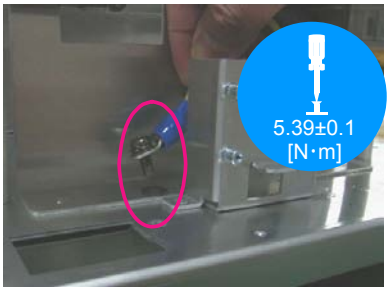

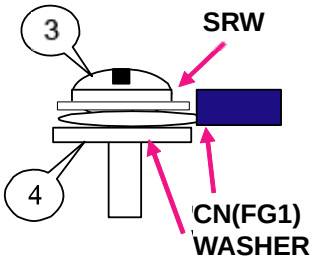

II. Mount the noise filter.

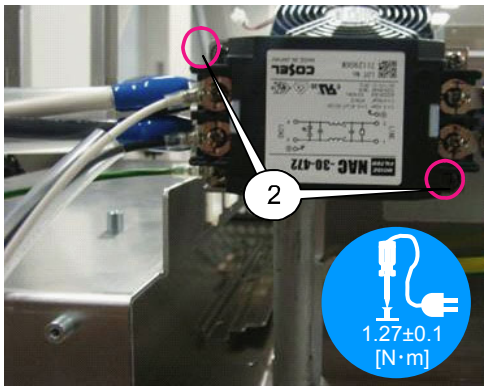

III. Mount the terminal.

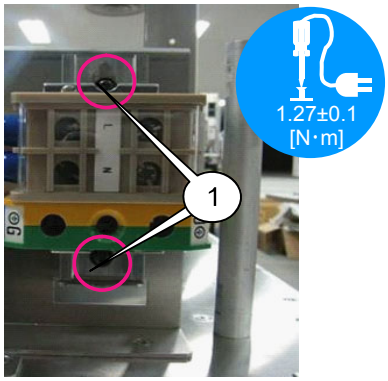

IV. Mount the circuit breaker.

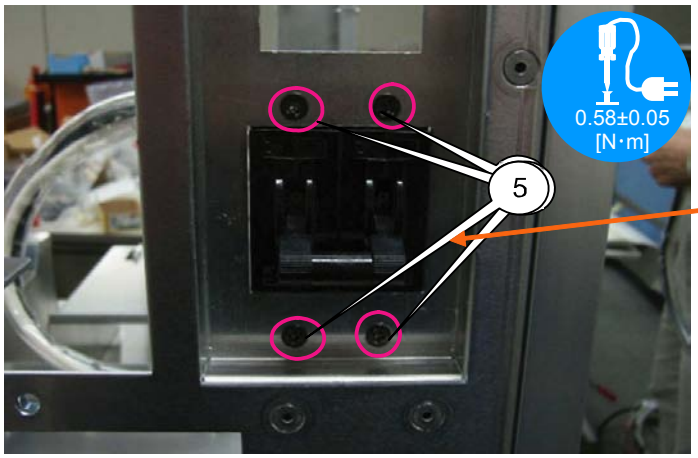

ON: Upper side

OFF: Lower side

22. SET ASSY

	Diagram symbol	Circuit symbol	Part name	Part number	Q'ty	Remarks

[2] Adjust the position of the CN WIRE65W 1283-8 and fix it to the noise filter where it does not generate any stresses.

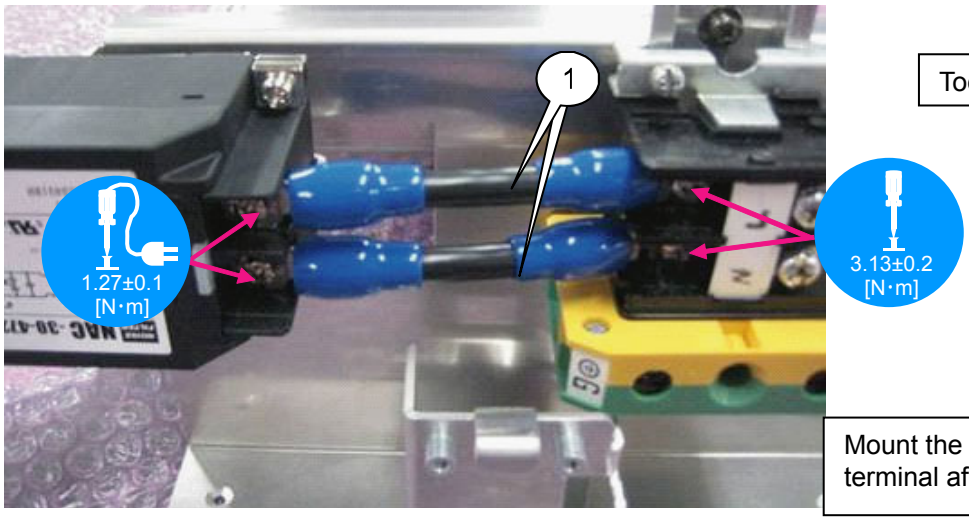

Tool: Tip No.2 driver bit

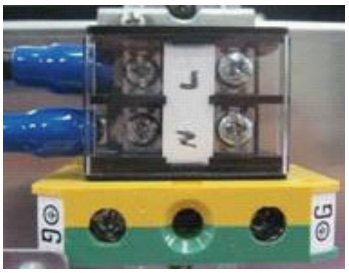

Mount the transparent cover to the terminal after mounting.

* If the cable does not reach, loosen the screw that is used to fasten the terminal. Adjust the terminal vertically and horizontally and fix it again where a cable can be installed.

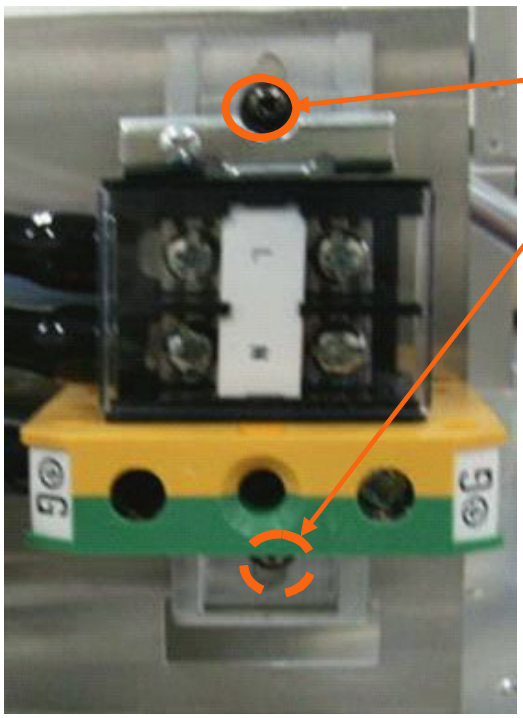

Loosen the terminal fixing screws for adjustments.

23. SET ASSY

	Diagram symbol	Circuit symbol	Part name	Part number	Q'ty	Remarks
	①		DUCT(PWB FAN) SASSY		1	
	②	S60063	PL-CPIMS*4*10*3KF	24V00461	4	Torque management

[1] Mount the Duct (PWB FAN) Assy to the Set Assy.

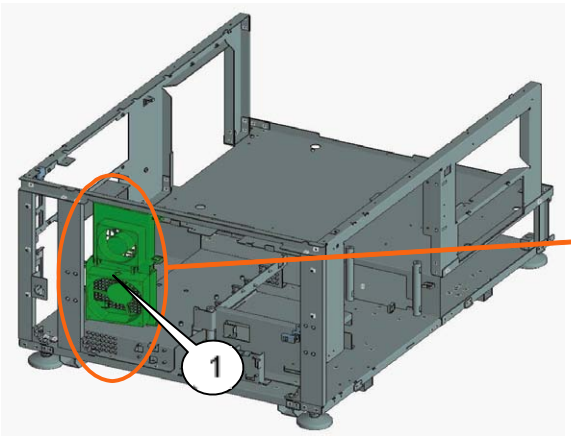

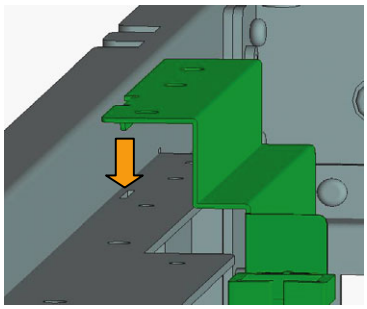

Hook the duct claws on the notch of the Chassis Base ASSY for fixing.

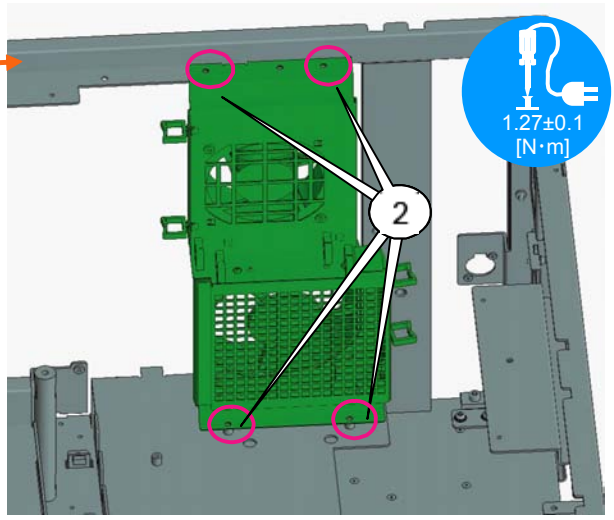

* The CN (AC4, AC5) shall pass beneath the DC fan (12 square).

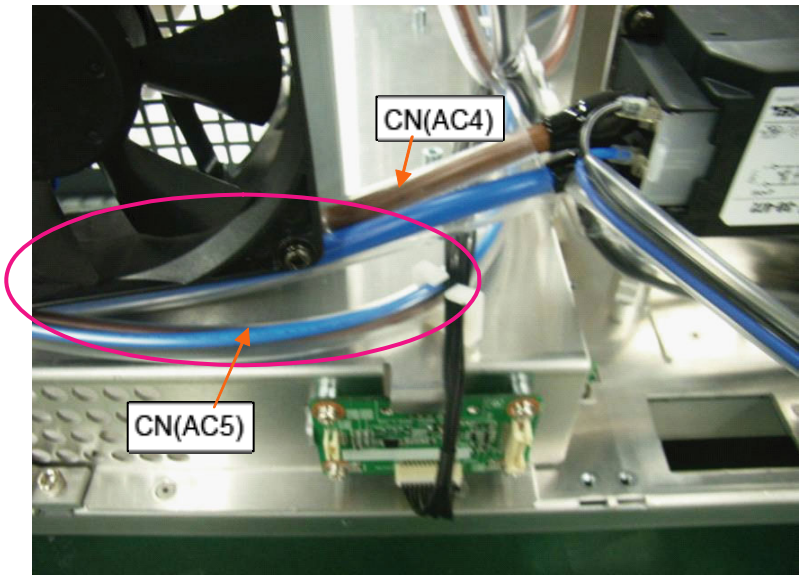

24. SET ASSY

	Diagram symbol	Circuit symbol	Part name	Part number	Q'ty	Remarks

[1] Bundle the CN (AC5) attached to the load terminal of the circuit breaker.

: Cabling route

: Bunding position

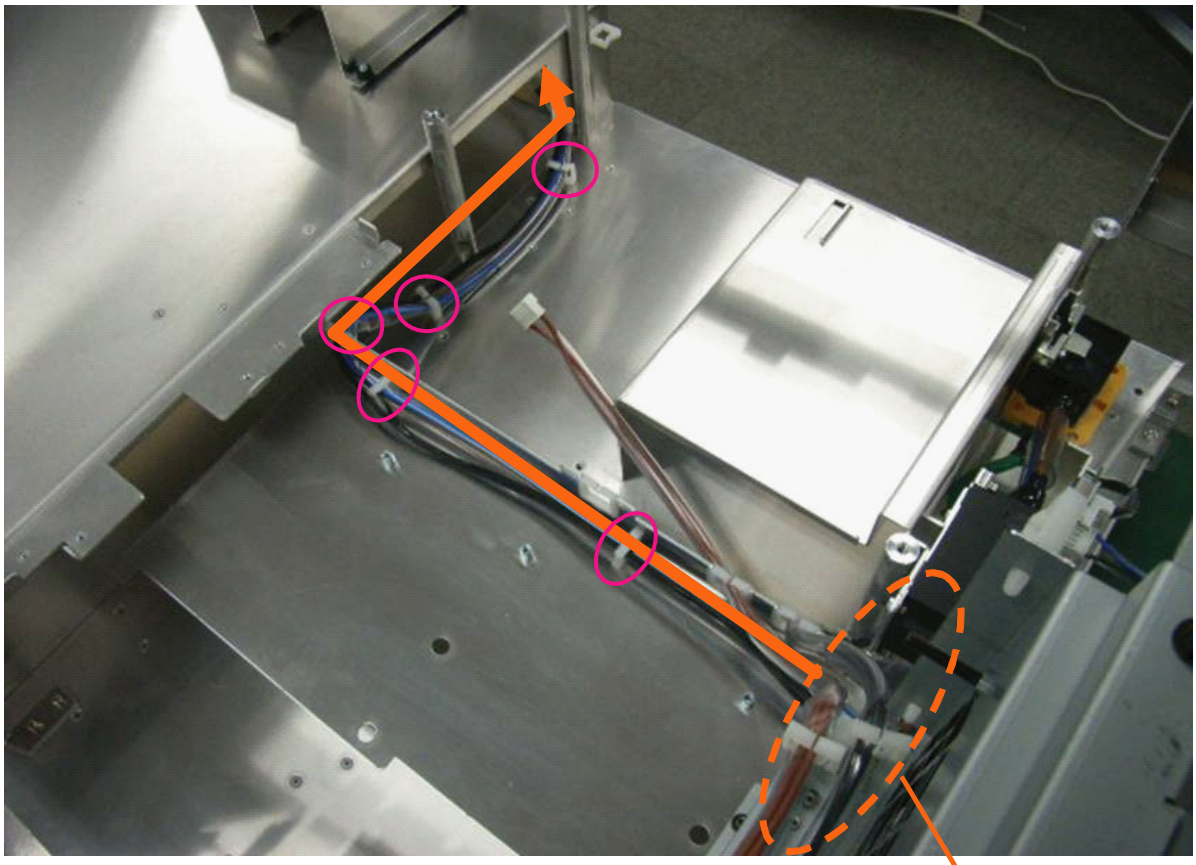

Pass the CN (CN5) beneath the cable that comes out of the noise filter.

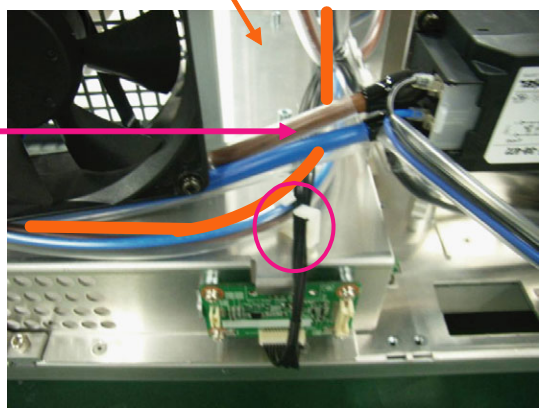

25. SET ASSY

	Diagram symbol	Circuit symbol	Part name	Part number	Q'ty	Remarks

[1] Install it after setting the SW SASSY.
After installation, confirm that the claws are assuredly locked.

Installation shall be such that "-" comes upwards and "o" comes downwards.

[2] Wire the cable of SW Sassy.
After cables have been laid on the wire saddles of the duct (PWB FAN), lay cables on the edge saddles of the chassis base ASSY.
<View from the right>

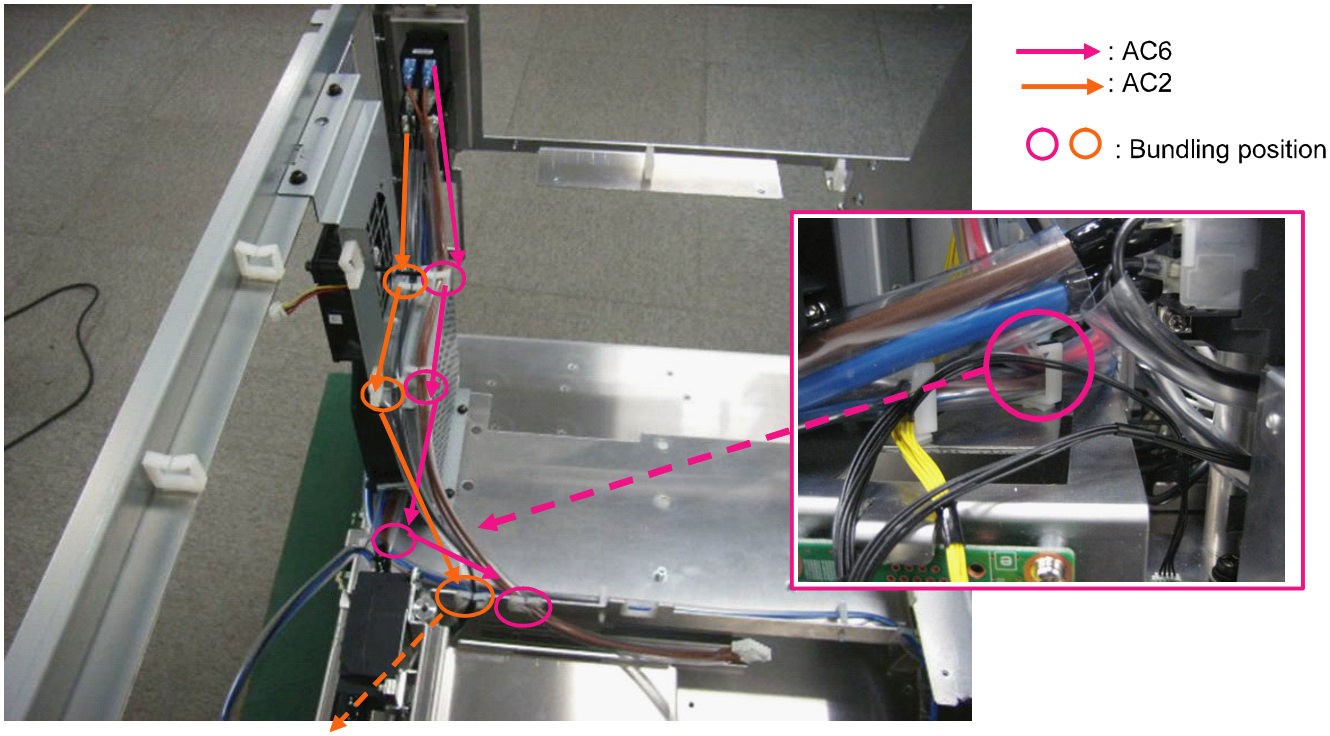

26. SET ASSY

	Diagram symbol	Circuit symbol	Part name	Part number	Q'ty	Remarks
	①		PEDE-A PWB ASSY	81T19ZD1	1	
	②	S60014	PL-CPIMS*3*8*3GF	24V00111	4	Torque management
	③	LPS	CN18-12P(LPS)860W,1061-26	7NWLH001	1	

[1] Apply the PEDE-A PWB to the bent part of a metallic plate and then install it.

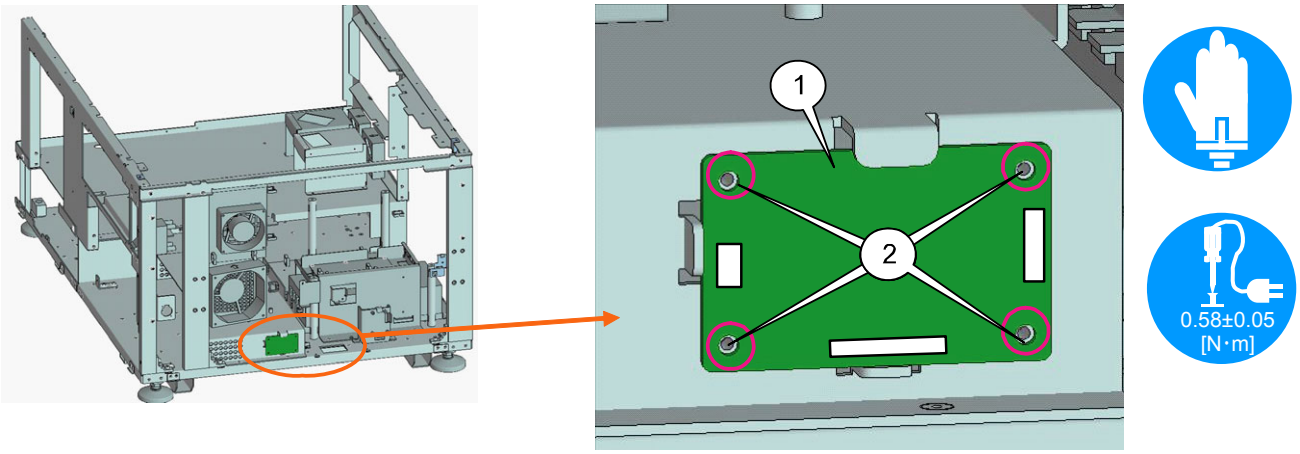

[2] Insert the CN (LPS) in the PEDE-A PWB. Lay cables as far as the LPSU.
Bundle cables in the position indicated by a purple circle in the illustration.

LPS
[PEDE] — [LPSU]

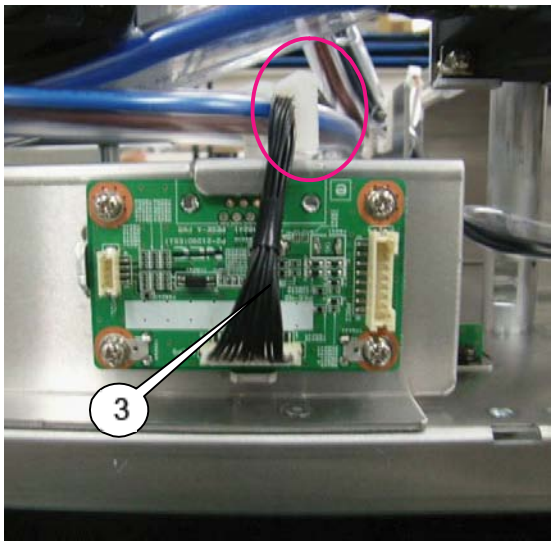

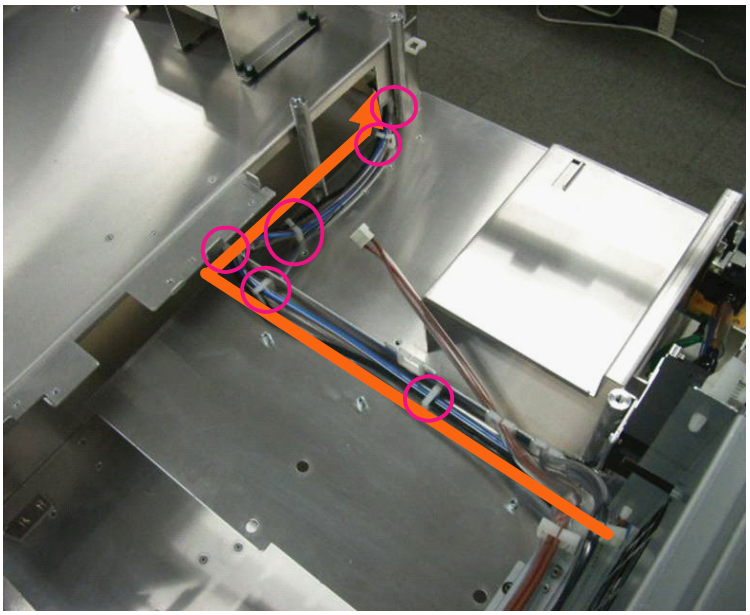

: Cabling route
: Bundling position

27. SET ASSY

	Diagram symbol	Circuit symbol	Part name	Part number	Q'ty	Remarks
	①		ACS PWB ASSY	81T19ZN1	1	
	②	S60013	PL-CPIMS*3*8*3GF	24V00111	4	Torque management

[1] Mount the ACS_PWB to the Set Assy.

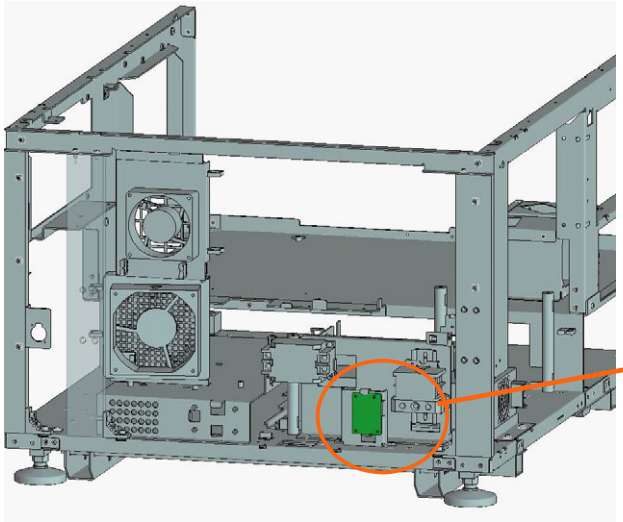

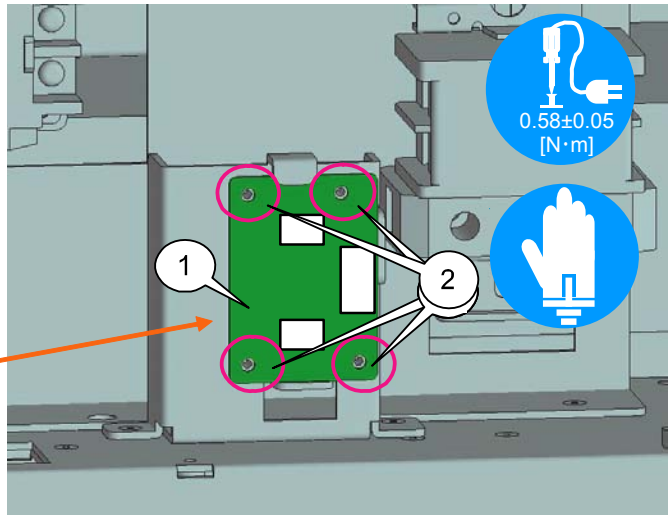

[2] Insert the CN (AC2) in the right side terminal of the ACS PWB and the CN (AC8) in the [A] terminal.
Check that the connector is locked assuredly.

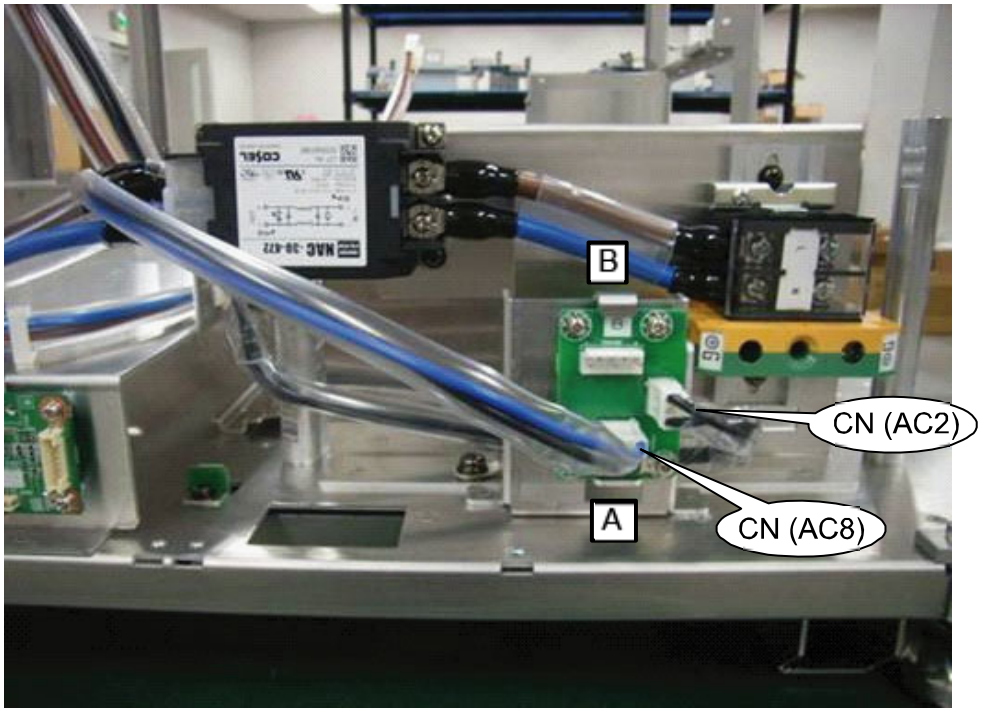

AC2: SW (on the CB)
AC8: Noise filter

28. SET ASSY

	Diagram symbol	Circuit symbol	Part name	Part number	Q'ty	Remarks
	①		SET PS SASSY		1	
	②	S60077	PL-CPIMS*4*10*3KF	24V00461	2	Torque management

[1] Mount the Set PS Sassy to the Set Assy.

At the time of installation, be careful not to pinch any cables located on the rear side.

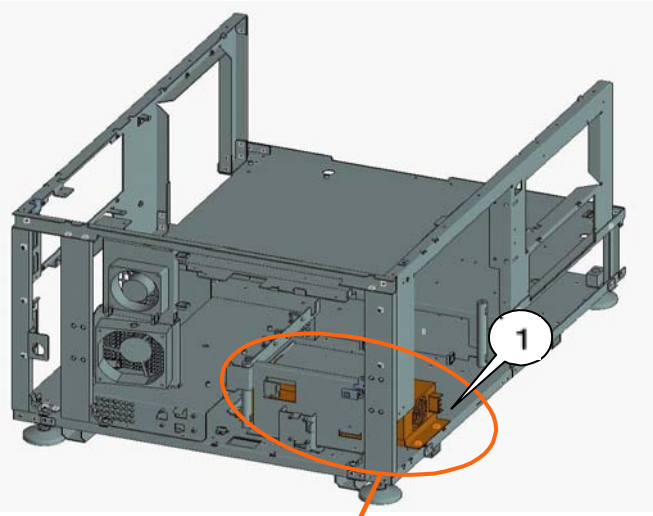

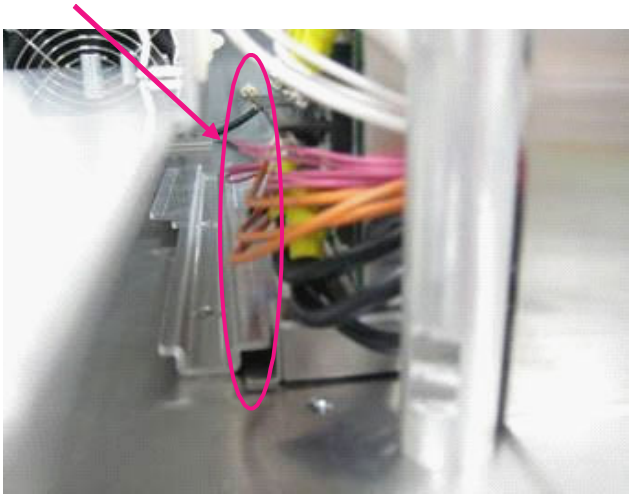

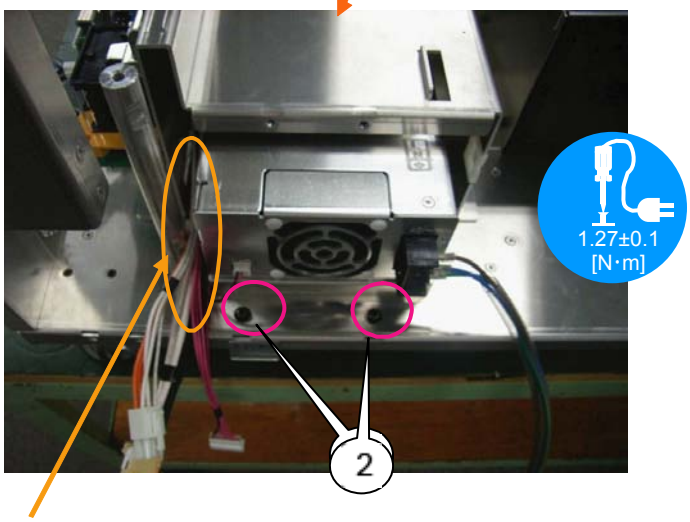

The bundled cables can be led out of this space. Cables shall be led out of the section between the pole and the set PS.

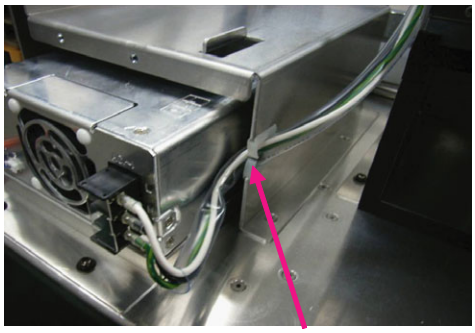

Pass the CN (AC1) through the edge saddle for cabling.

29. SET ASSY

	Diagram symbol	Circuit symbol	Part name	Part number	Q'ty	Remarks
	①		AC PWB SASSY		1	
	②	S60078	PL-CPIMS*4*10*3KF	24V00461	2	Torque management

[1] Mount the AC PWB Assy assembled in the previous page to the Chassis base Assy.

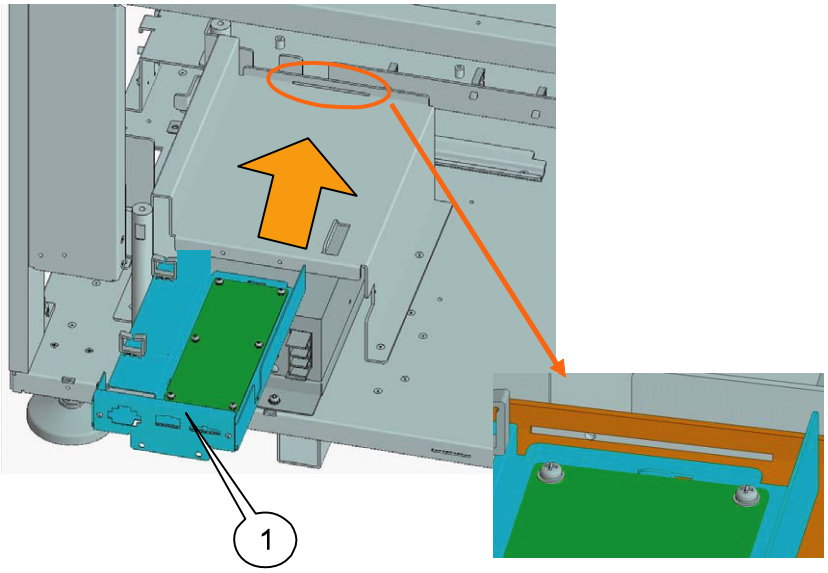

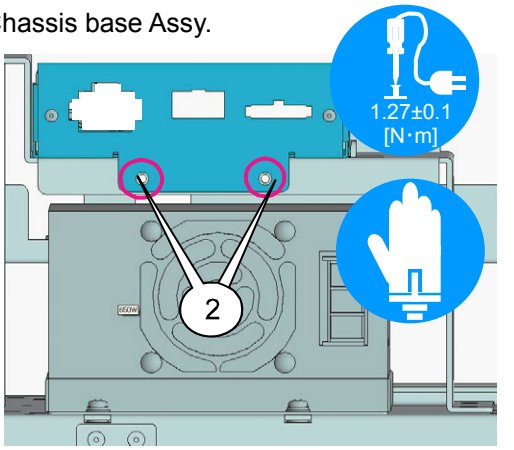

For fixing, hook the bracket claws on the notch of the Chassis Base ASSY.

[2] Connect three relay connectors of the AC PS to those of the AC PWB.
Insert the CN (AC1) of the AC PS terminal in the AC PWB.

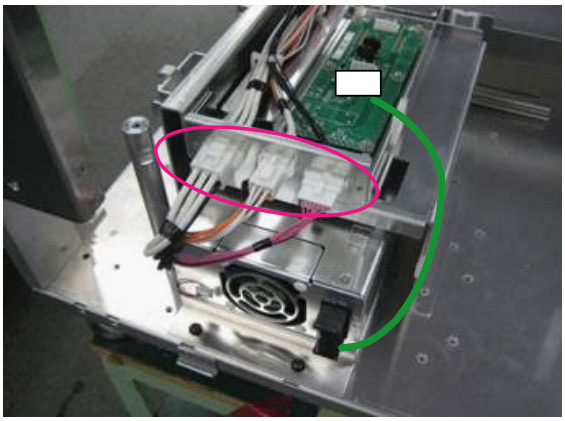

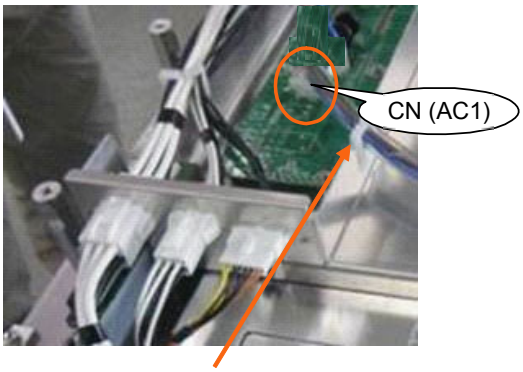

30. SET ASSY

	Diagram symbol	Circuit symbol	Part name	Part number	Q'ty	Remarks

[1] Insert the CN(AC6) in AC PWB.
Wire the Relay cable of GPSU.

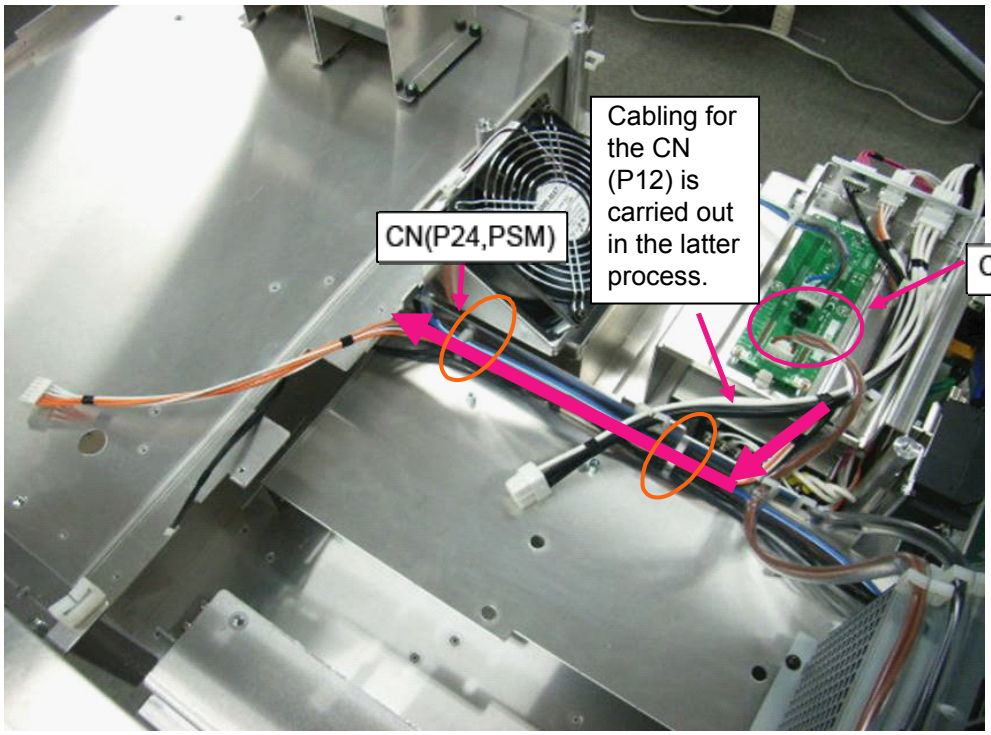

31. SET ASSY

	Diagram symbol	Circuit symbol	Part name	Part number	Q'ty	Remarks
	①		TSENS-A PWB ASSY | TSENS-H PWB ASSY	81T19ZAA | 81T19ZAH	6	TSENS PWB
	②	CN1-3	CN4 (CN1-3)260W,1571-26	7NW4H002	1	
	③	S60051	PL-CPIMS*3*8*3GF	24V00111	1	Torque management

[1] Insert the CN (CN1-3) in the TENS-B_PWB, and mount it to the Set Assy.

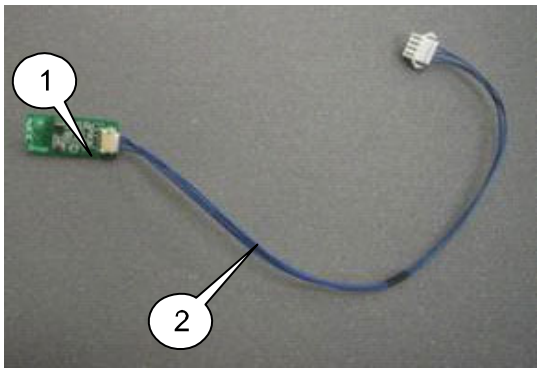

Since this work has to be done in a very narrow space, the PWB must be handled with utmost care.

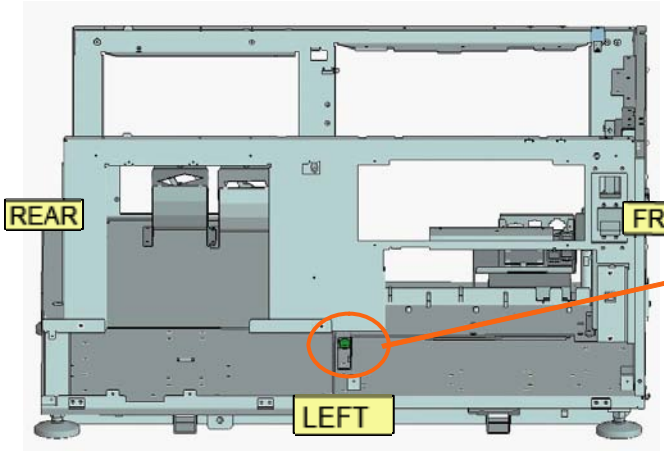

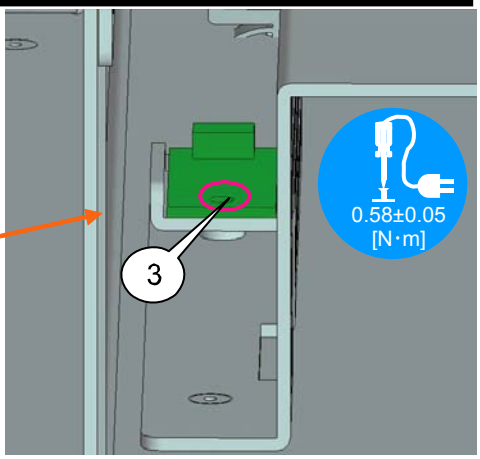

32. SET ASSY

	Diagram symbol	Circuit symbol	Part name	Part number	Q'ty	Remarks

[1] Mount the Power supply Sassy assembled on the Set Assy.
Insert the CN(LPS) in the "INTERFACE" of LPSU before tightening the screw.

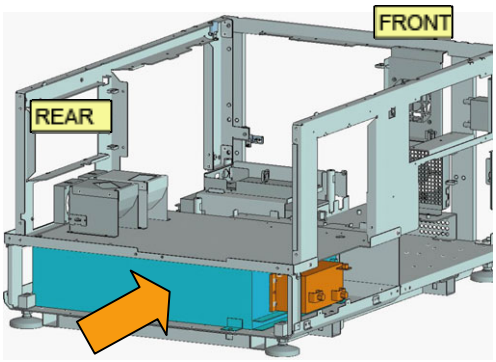

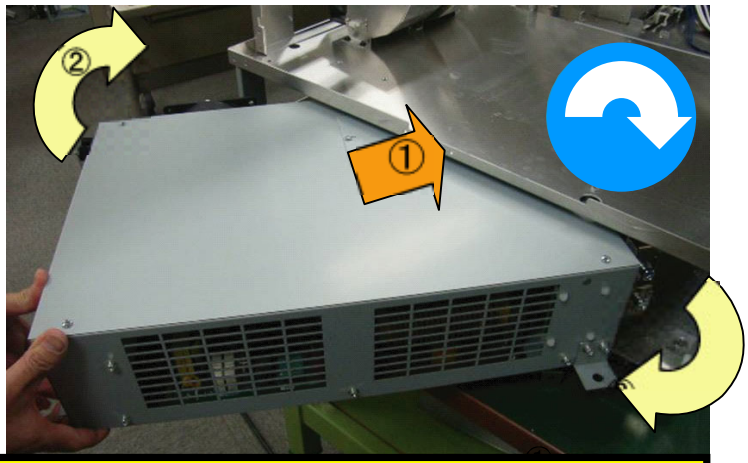

After it has been moved in the direction of ① to a degree the igniter is hidden, turn and push it in the direction of ②.
Adjust it to the screw holes.
At that time, be careful not to hit the frame with the igniter.

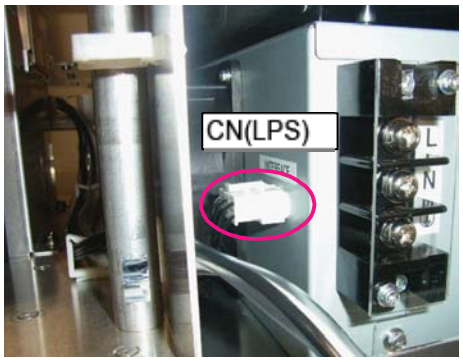

33. SET ASSY

	Diagram symbol	Circuit symbol	Part name	Part number	Q'ty	Remarks
	①	S60022	HHCS*8*20*3GF	24V00741	4	Torque management

[1] Fix the LPSU with HHCS*8*20*3GF.

Tool: Tip 7mm dia. short hexagon bit

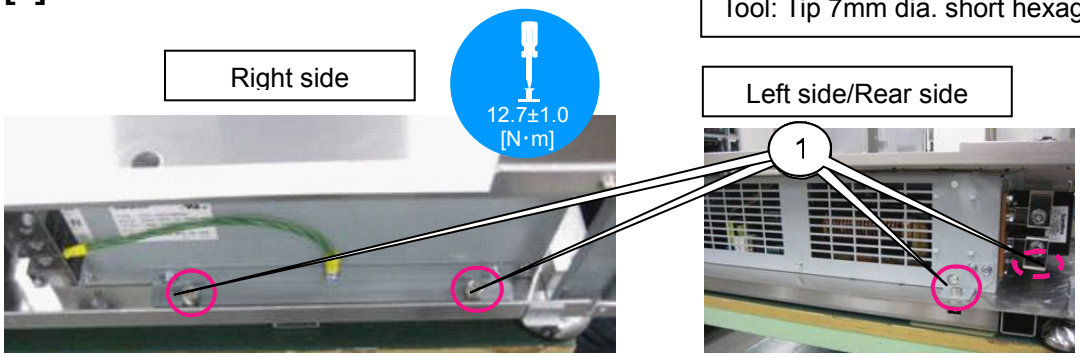

[2] Fix CN(AC5) on the terminal board of the ballast PS.

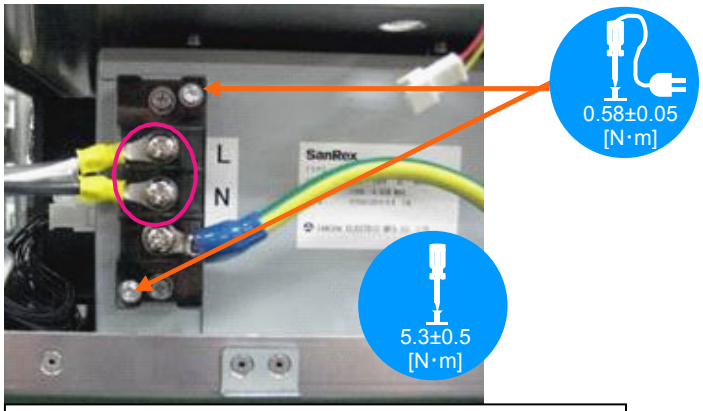

Mount the transparent cover after completing the installation.

34. SET ASSY

	Diagram symbol	Circuit symbol	Part name	Part number	Q'ty	Remarks
	①		DUCT(DMD FAN) SASSY		1	
	②	S60062	PL-CPIMS*4*10*3KF	24V00461	4	Torque management
	③		LAMP BASE ASSY	24HS4331	1	
	④	S60039	PL-CPIMS*6*14*3KF	24N02981	4	Torque management

[1] Mount the Duct (DMD FAN) Sassy to the Set Assy.

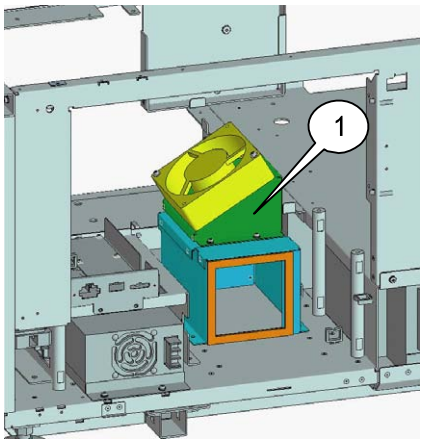

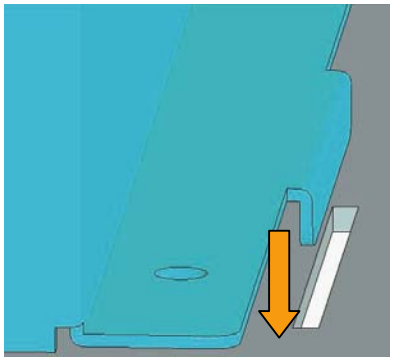

For fixing, hook the bracket claws on the notch of the Chassis Base ASSY.

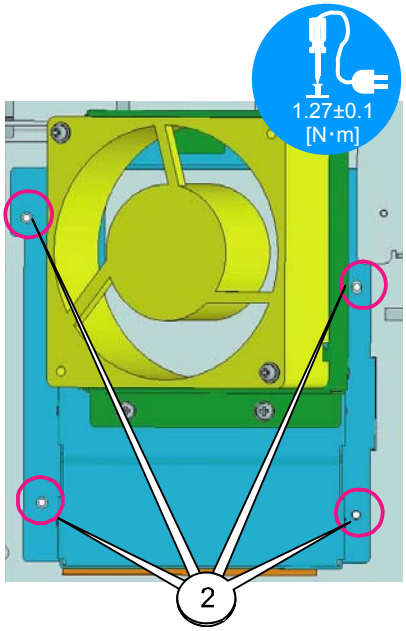

[2] Mount the Lamp base Assy.

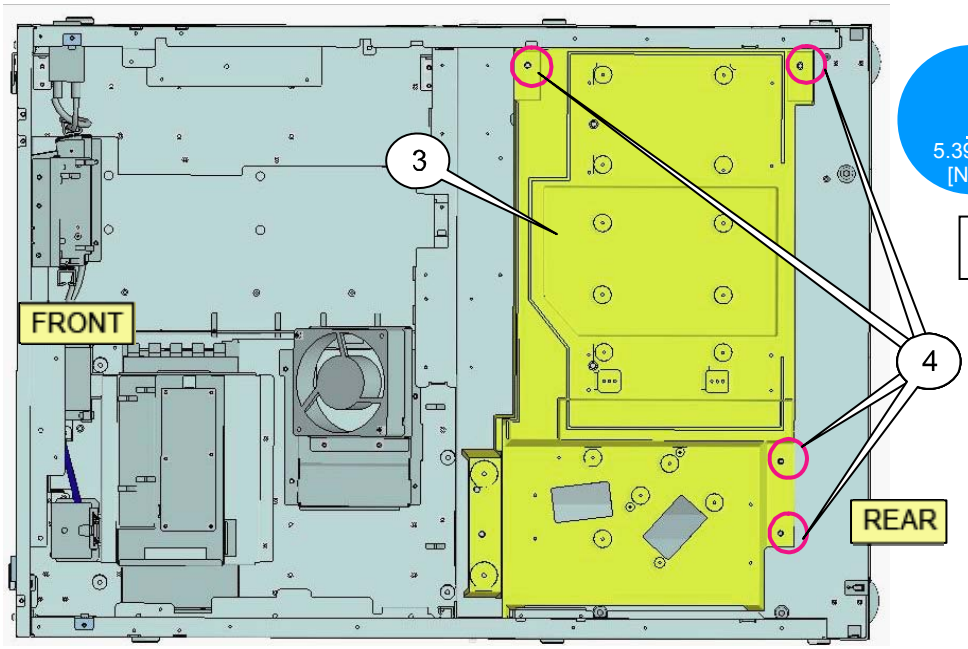

Tool: Tip No.2 driver bit

35. SET ASSY

	Diagram symbol	Circuit symbol	Part name	Part number	Q'ty	Remarks
	①		ENGINE BASE ASSY	24HS4251	1	
	②	S60037	PL-CPIMS*6*20*3GF	24V01111	8	Torque management

[1] Mount the Duct (DMD FAN) Sassy to the Set Assy.

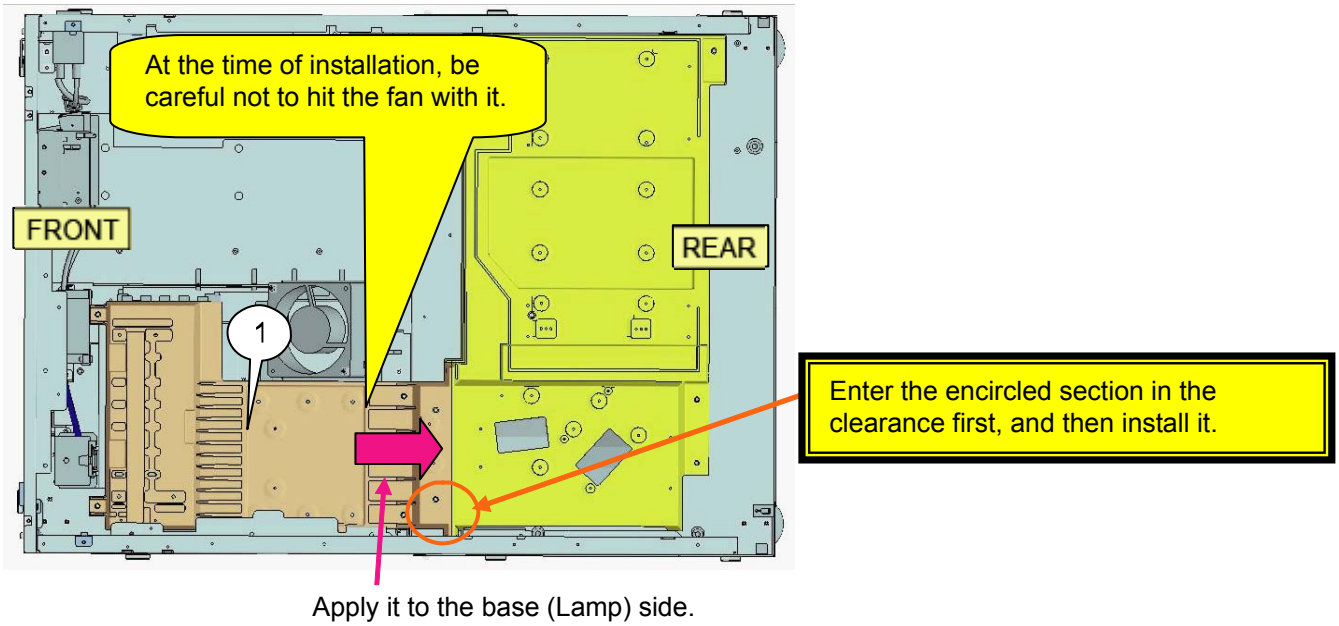

[2] Fix the base (Lamp) according to the caution notes below.

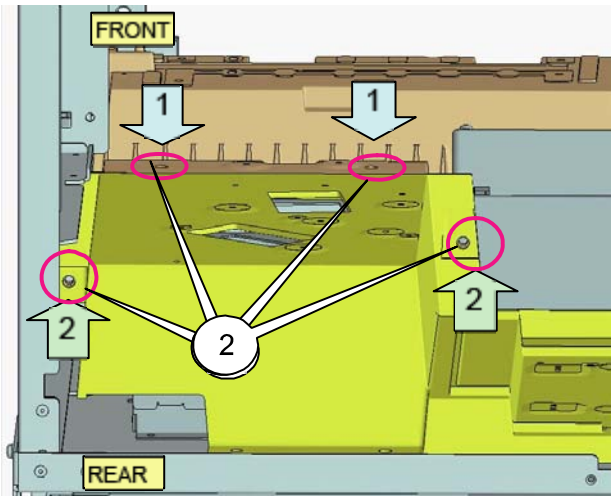

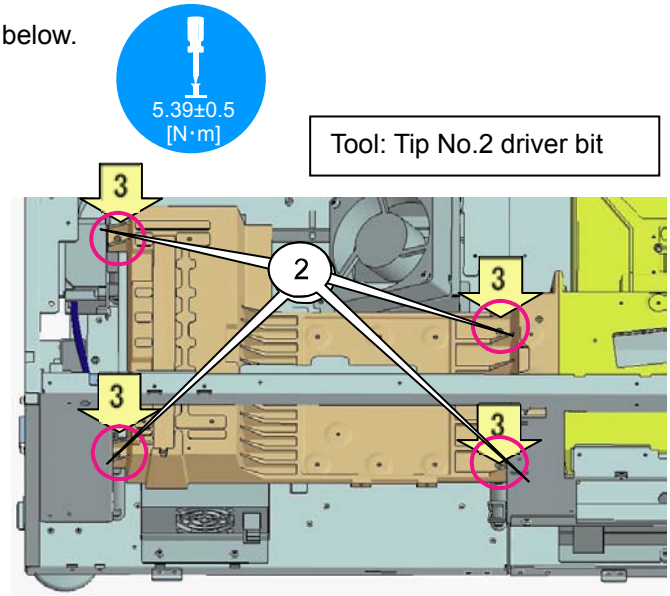

* When installing the Engine Base Assy, apply it to the lamp base side and tighten screws from above (1).
Then, tighten screws from the side (2) and tighten the screw (3) to fasten the Engine Base Assy.
Apply the Engine Base Assy to the lamp base and install it without permitting the presence of clearance.

36. SET ASSY

	Diagram symbol	Circuit symbol	Part name	Part number	Q'ty	Remarks
	①		PLATE(LEF BASE)	24J34821	2	
	②	S60031	PL-CPIMS*4*10*3KF	24V00461	4	Torque management
	③	K60018	DCFAN 9G0824G105	3N170149	2	
	④	S60020	PL-CPIMS*4*50*3KF	24V00531	4	Torque management

[1] Mount the plate (LEF BASE) to the base (LAMP).

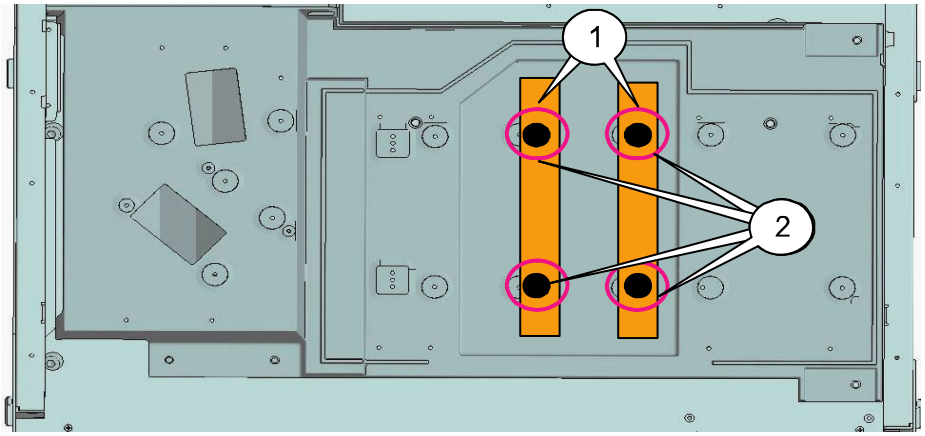

[2] Mount the lot cooling fan to the Duct (ROD) fan Sassy.

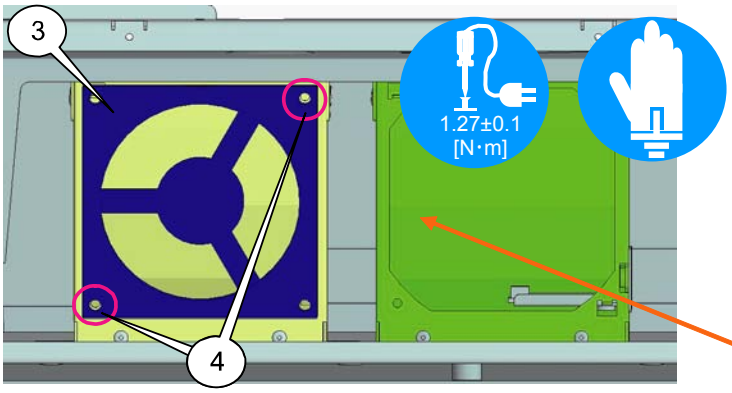

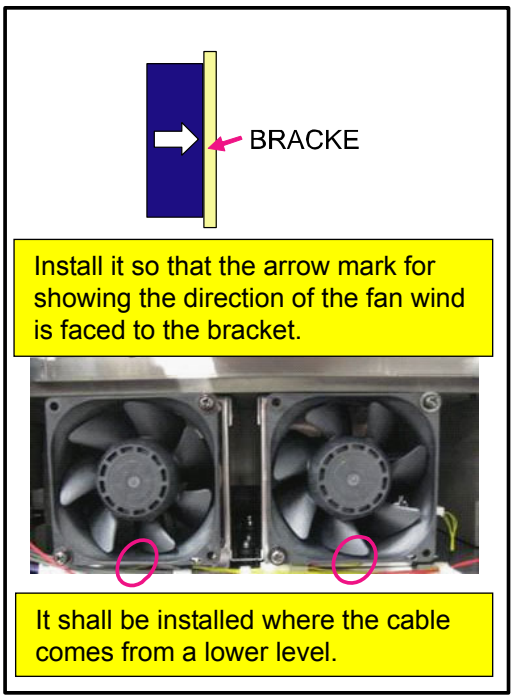

[3] Mount the CM cooling fan to the bracket of the Duct (CM FAN) fan Sassy.

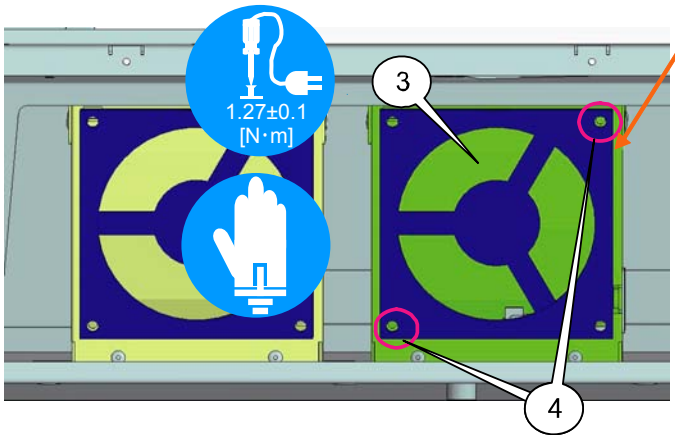

37. COLD MIRROR SASSY

	Diagram symbol	Circuit symbol	Part name	Part number	Q'ty	Remarks
	①	K71005	COLDMIRROR(G343)	12JS0272	1	
	②		BRACKET(CM1)	24H59942	1	
	③		PLATESPRING(CM1)	24H59961	2	
	④	S71002	CBIMS*2*6*3KF	24V00541	4	Torque management

[1] Fix the cold mirror to the bracket (CM1) with the plate spring (CM1) and screws.

Caution: When putting the cold mirror on the bracket (CM1), confirm that the red marking is located as shown in the photo below.
Do not touch the mirror surface with naked hands.

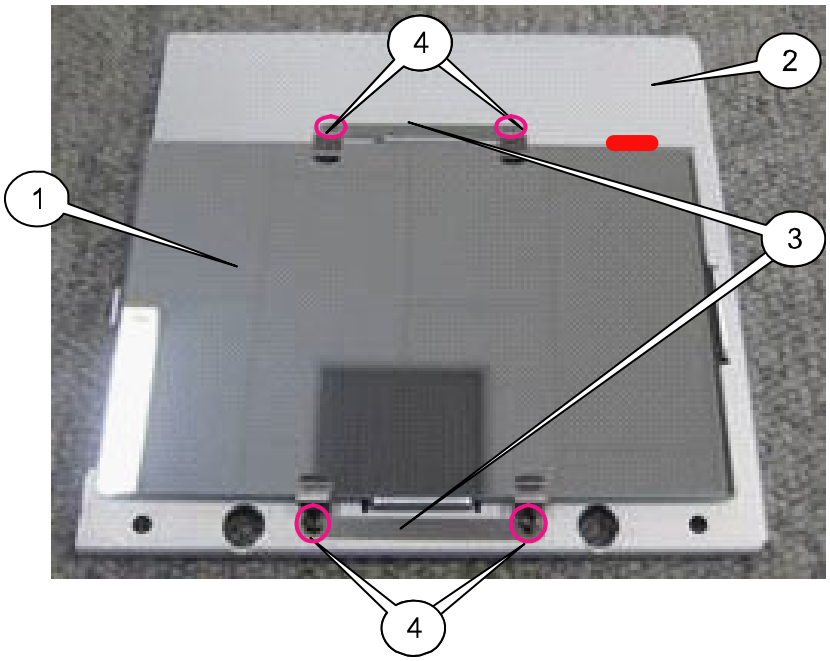

38. COLD MIRROR SASSY

	Diagram symbol	Circuit symbol	Part name	Part number	Q'ty	Remarks
	①		BASE(CM)	24H66781	1	
	②	K71002	SPRING(WM6-10)	24C08451	3	
	③	S71001	HHCS*3*16*3GF	24V01121	3	Torque management

[1] Insert a spring in the bracket (CM1) where the base (CM) and the cold mirror are mounted.

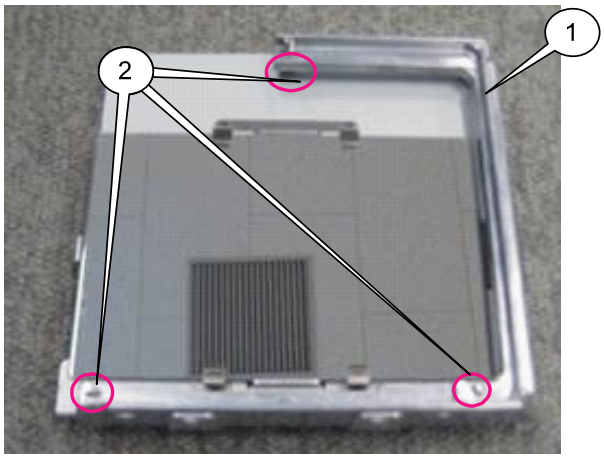

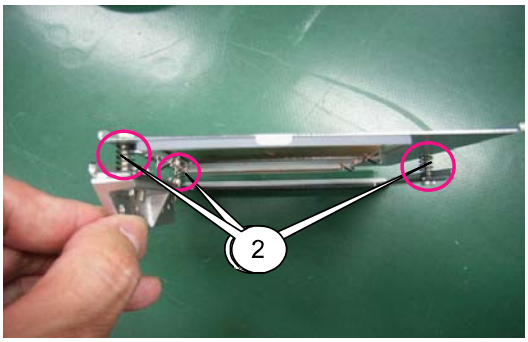

[2] Attach an appropriate clearance securing jig to the section between the base (CM1) A and the bracket (CM1), and tighten the screw.
Adjust the clearance of "4mm" or "6mm" by using the special tool.

- Adjust the upper screw to a clearance of 4mm with the use of the jig (CM)(4mm).
- Adjust the lower screw to a clearance of 6mm with the use of the jig (CM)(6mm).

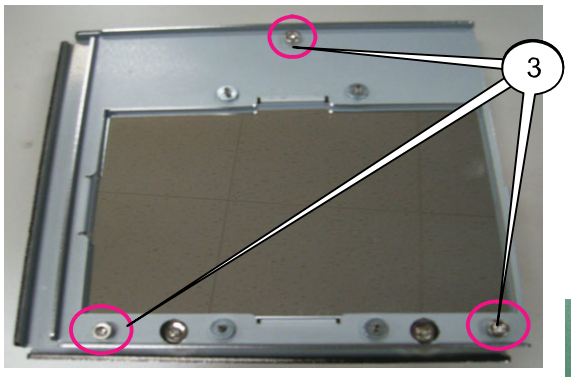

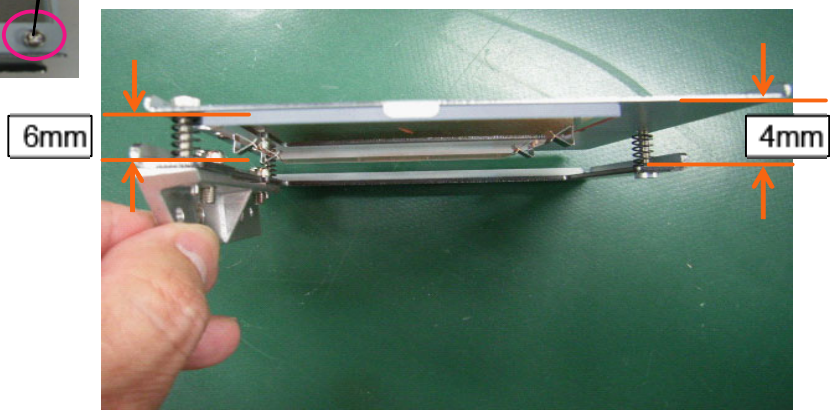

39. COLD MIRROR SASSY

	Diagram symbol	Circuit symbol	Part name	Part number	Q'ty	Remarks
	①	K60085	GLUE,SCREW LOCK	92201082		Amount used = approx. 0.06g×3 points

[1] Apply GLUE SCREW LOCK after adjustment.
Apply GLUE SCREW LOCK at the side of the screw head.

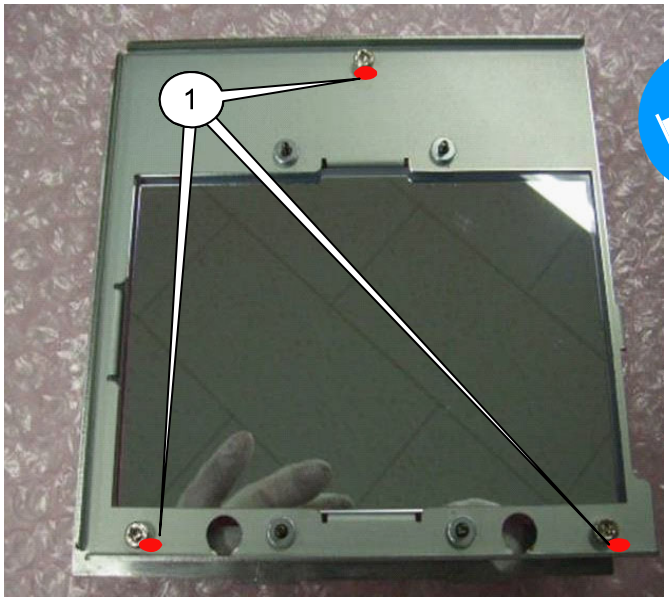

After the completion of work, use air blow and examine the freedom from contamination by dust and flaws.

40. HEAT SINK SASSY

	Diagram symbol	Circuit symbol	Part name	Part number	Q'ty	Remarks
	①		HEAT SINK(EB146-100)	24H56602	1	
	②		BRACKET(HEAT SINK)	24H59951	1	
	③	S75001	PL-CPIMS*4*10*3KF	24V00461	3	Torque management

[1] Mount the Heat sink (EB146-100) to the Bracket (HEAT SINK).
Apply the heat sink to the bracket and install it.

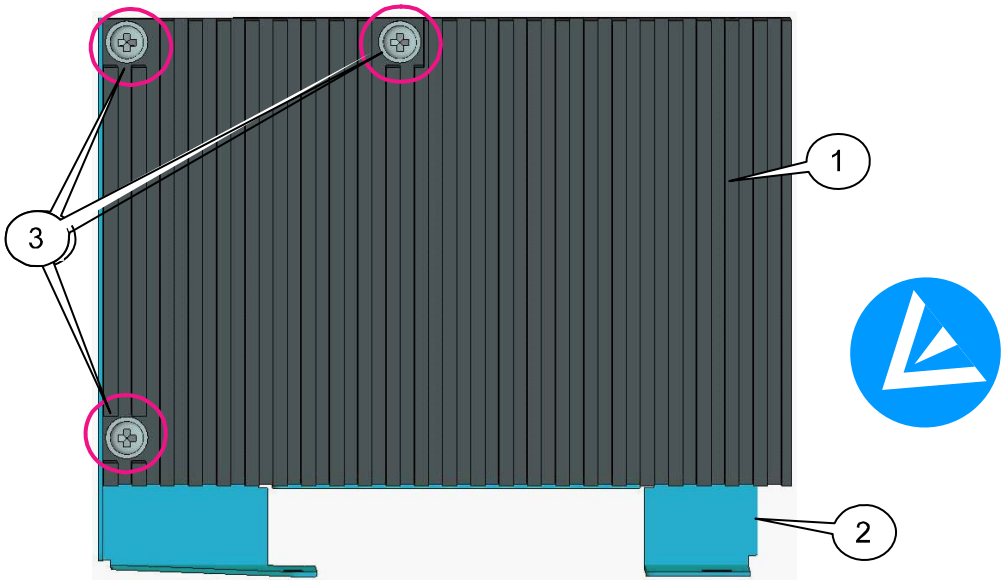

41. L-SENS SASSY

	Diagram symbol	Circuit symbol	Part name	Part number	Q'ty	Remarks
	①		HOLDER(SENSOR)	24H68322	1	
	②		FILTER(SENSOR)	24J28671	1	
	③		LSENS PWB ASSY	81T19ZH1	1	
	④	S85001	PL-CPIMS*3*8*3GF	24V00111	2	Torque management

[1] Paste the filter (SENSOR) to the holder (SENSOR).
Apply and stick it to the three round bosses of the holder (sensor).

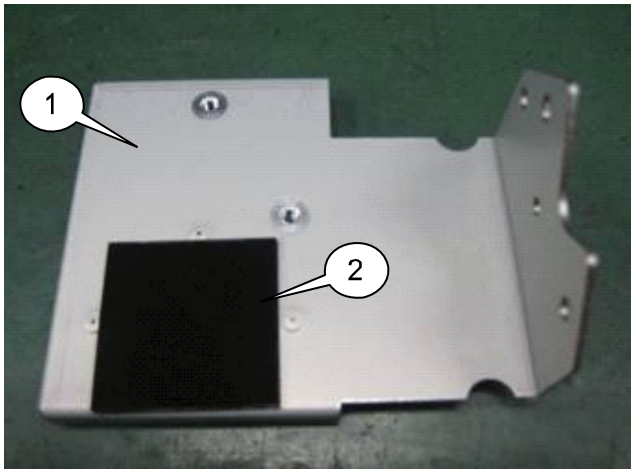

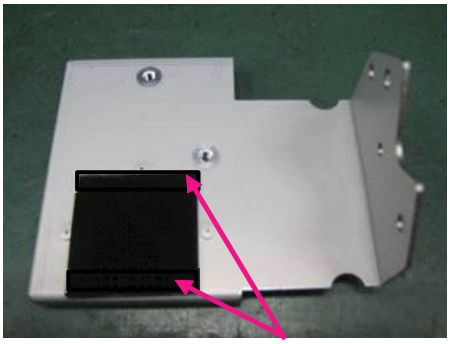

Adhesive surface

[2] Attach the LSENS PWB to the rear side where the filter (sensor) is stuck.
Use a jig for assembly work.

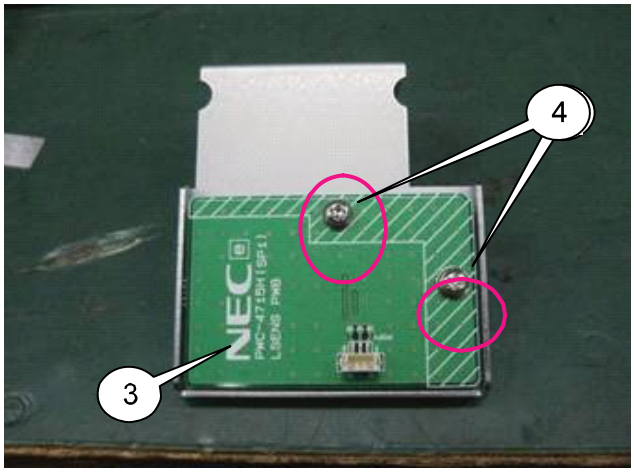

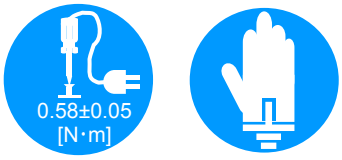

The sensor section shall be positioned within the round hole.

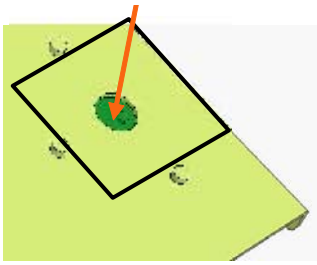

42. LAMP COVER(S) SASSY

	Diagram symbol	Circuit symbol	Part name	Part number	Q'ty	Remarks
	①		LAMP COVER S ASSY	24HS4821	1	
	②		GASKET(STG10-10 L=85)	24C09841	8	
	③	K76002	INSULATION PLATE B	24J34841	1	
	④	S76002	PL-CPIMS*4*10*3KF	24V00461	4	Torque management

[1] Paste the gasket to the Lamp cover Sassy.
Stick the gasket so that all of its adhesive surface comes to the outside.
The position of adhesion shall be adjusted to the outer edge as illustrated at right.

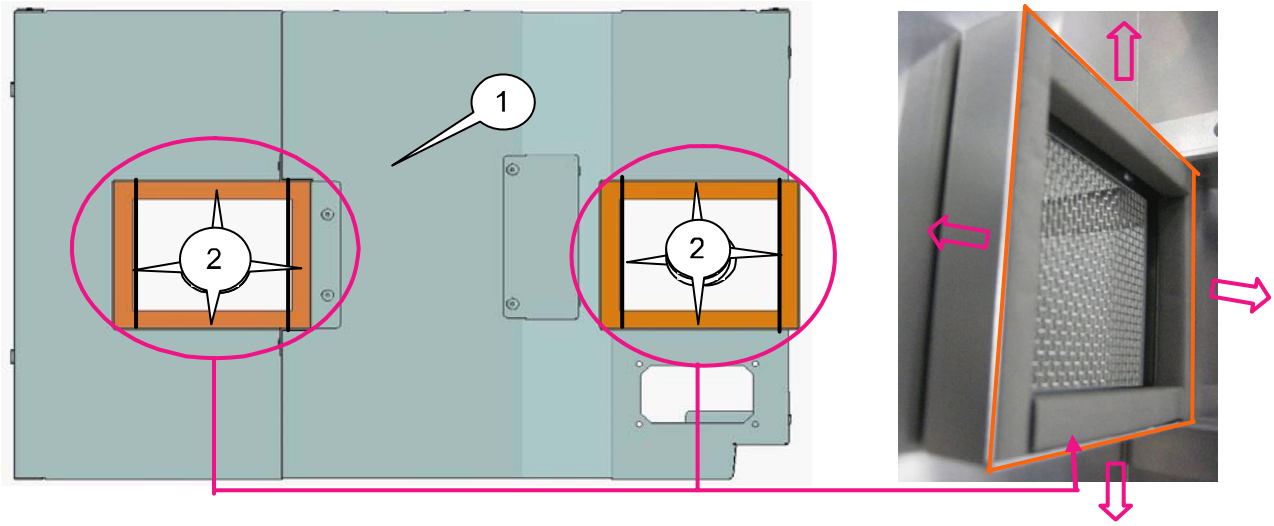

[2] Mount the Insulation plate B to the Lamp cover Sassy.
This item is intended to be used in common. A hole is also provided to the inside.
However, there is no designation of direction.

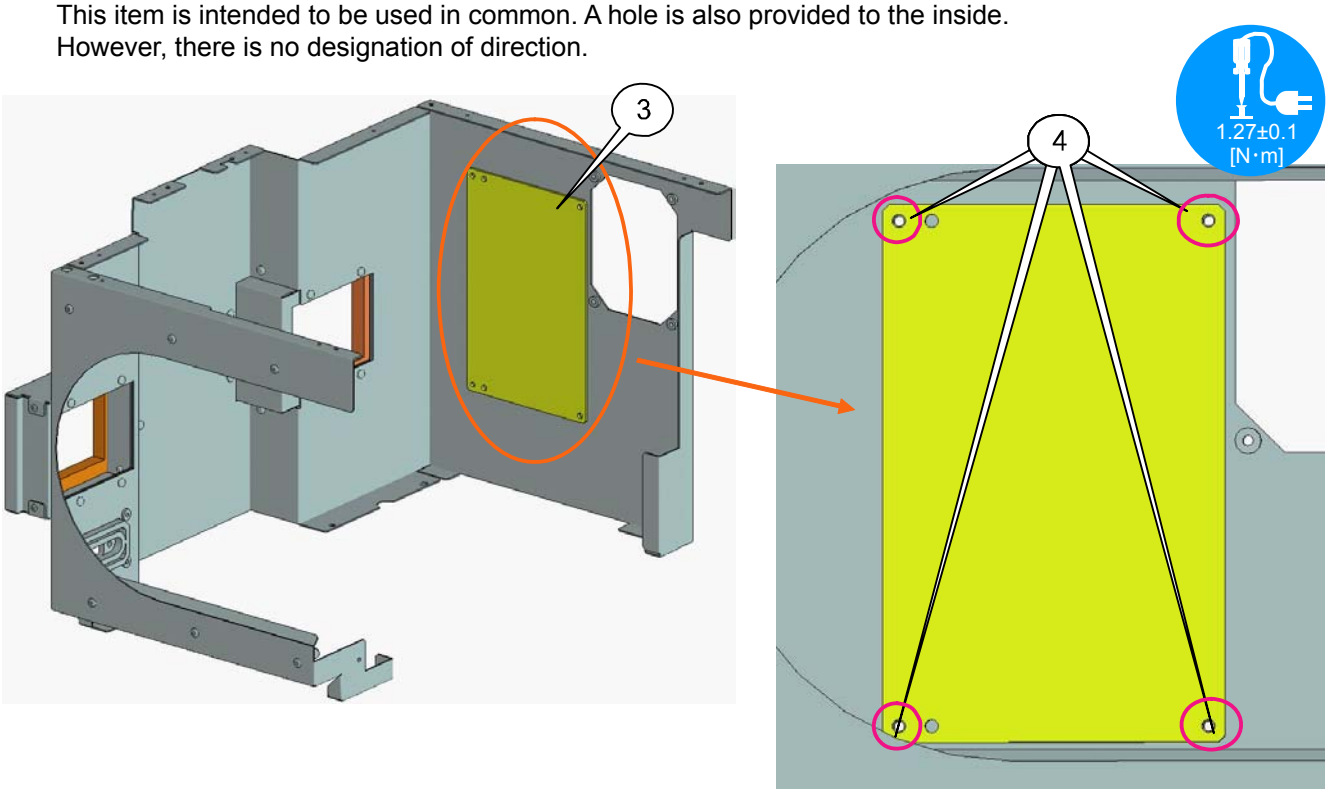

43. LAMP COVER(S) SASSY

	Diagram symbol	Circuit symbol	Part name	Part number	Q'ty	Remarks
	①		TERMINAL PLATE(NC16 PLUS)	24BS8001	1	
	②		CN WIRE(L+)525W,1284-2/0	7NN1N049	1	
	③	K60081	BAND(L=100 T18R)	24C09121	1	
	④	S60025	PL-CPIMS*4*10*3KF	24V00461	4	Torque management

[1] Mount the CN wire (L+) to the Terminal plate (PA67)(+).
The cables shall be positioned to face the right side when they are seen as illustrated.

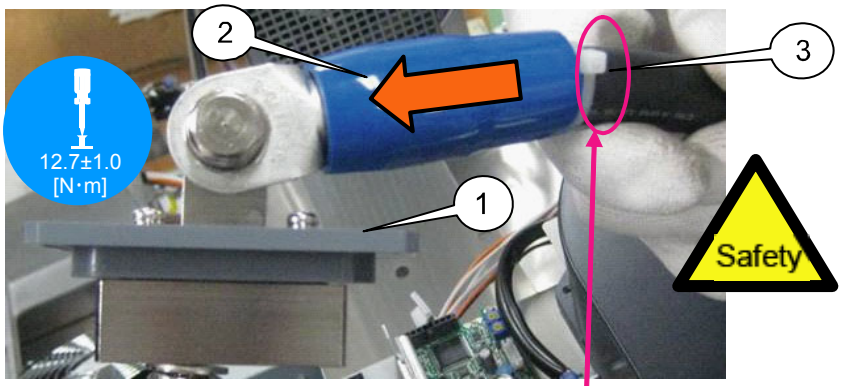

As seen from above, the lamp cable-fastening nut shall be positioned on the left side from the terminal center as illustrated below.

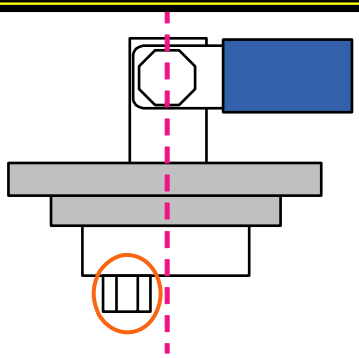

Tool: OS 14 mm box socket

Push the terminal cover in the direction of the arrow and fasten it with a harness band so that it is not shifted.
To avoid the shifting of the terminal cover, any surplus band should be cut off with a margin of 5mm to remain.

[2] Mount the Terminal plate (PA67)(+) to the Lamp cover Sassy.

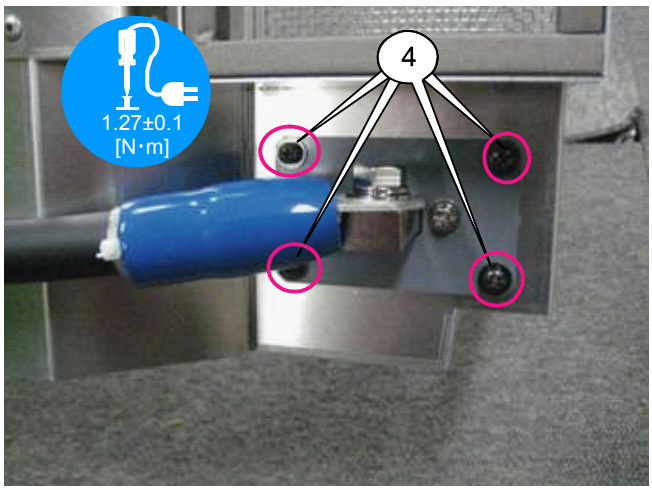

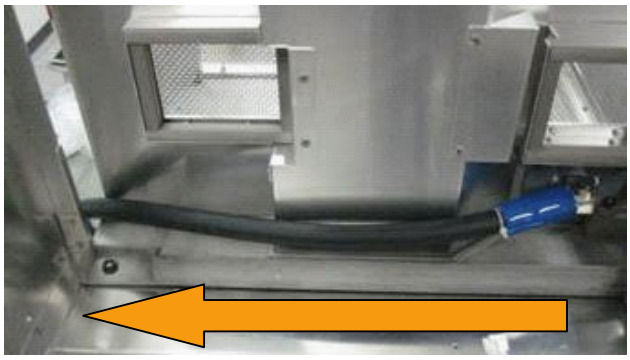

Fix the cable so that it goes in the direction of the arrow.

44. LAMP COVER(S) SASSY

	Diagram symbol	Circuit symbol	Part name	Part number	Q'ty	Remarks
	①		TERMINAL PLATE(NC16 MINUS)	24BS8011	1	
	②	S60024	PL-CPIMS*4*16*3GF	24V00471	4	Torque management

[1] Mount the terminal plate (NC16 MINUS) to the lamp cover S Sassy.

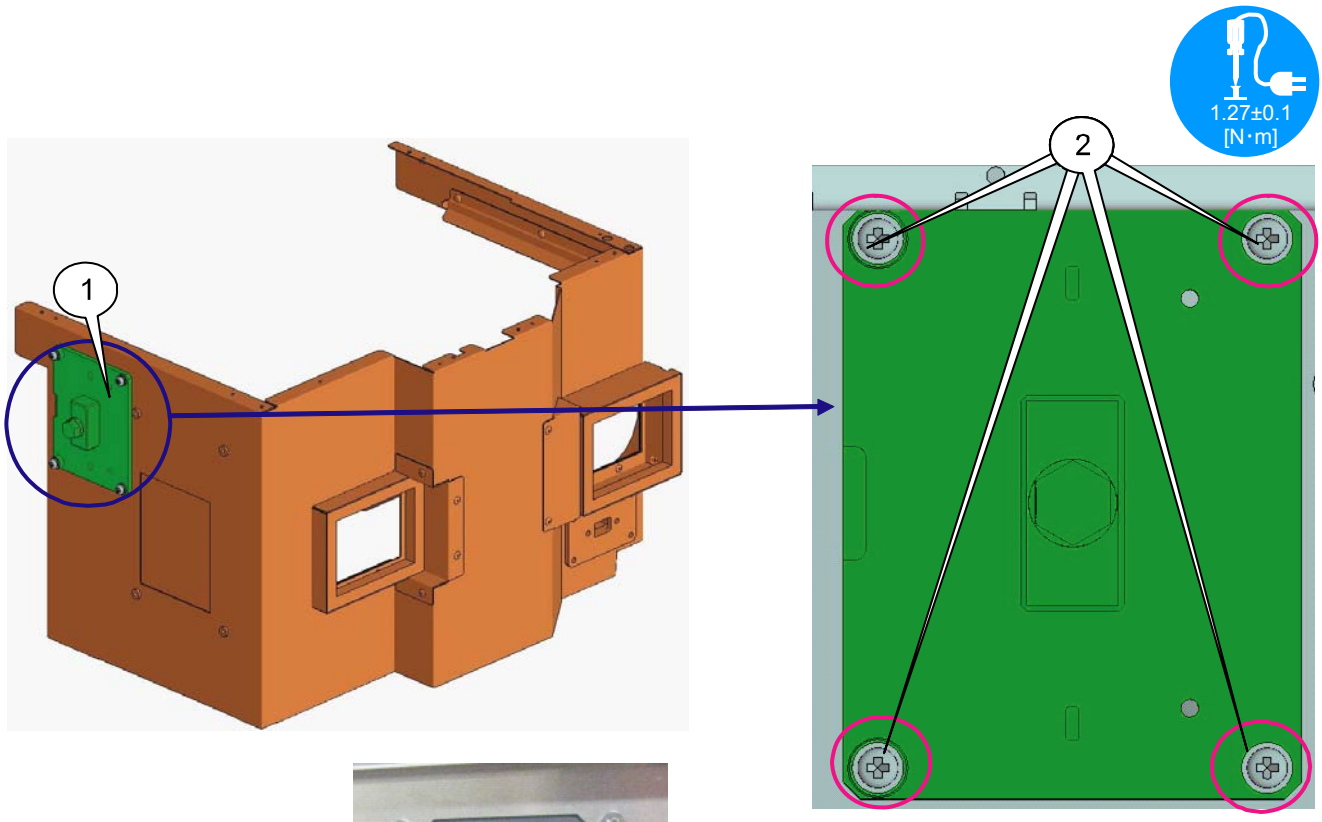

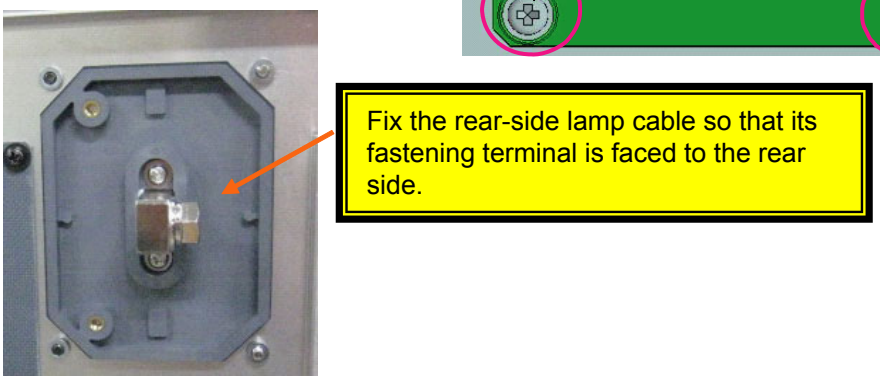

45. LAMP COVER(T) SASSY

	Diagram symbol	Circuit symbol	Part name	Part number	Q'ty	Remarks
	①		LAMP COVER T ASSY	24HS4832	1	
	②	K78002	GASKET(STG3-5 L=100)	24C09861	4	
	③	K78003	GASKET(STG3-5 L=120)	24C09851	4	

[1] Paste the gasket to the Lamp cover T Assy.

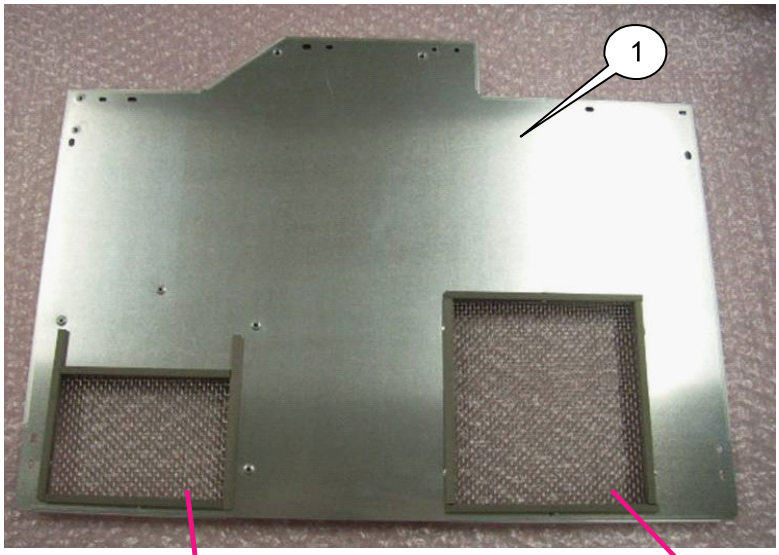

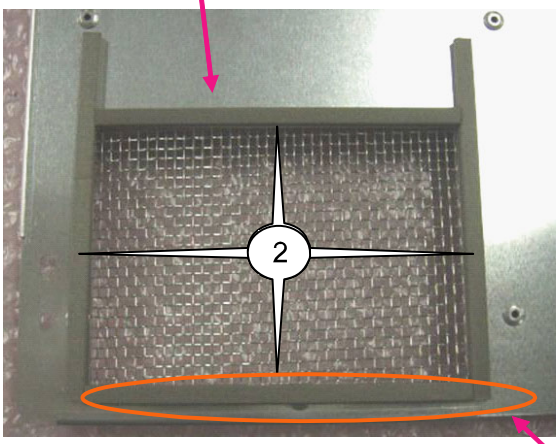

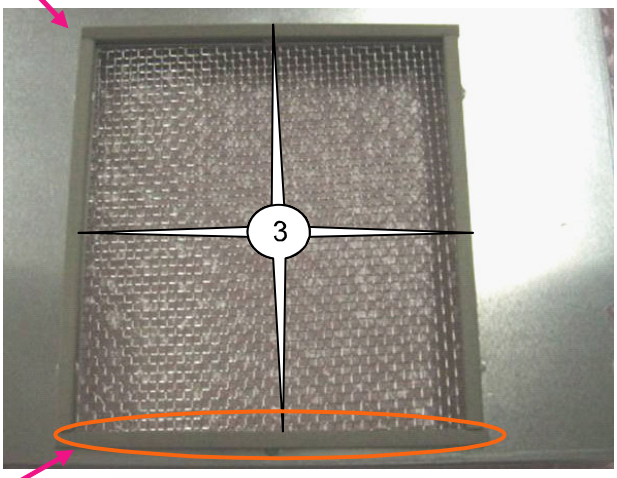

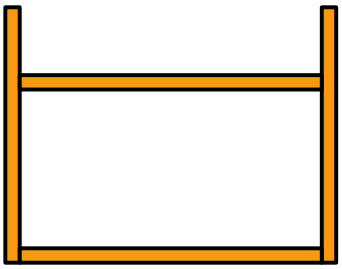

Acceptable when it is stuck to the rivet top.

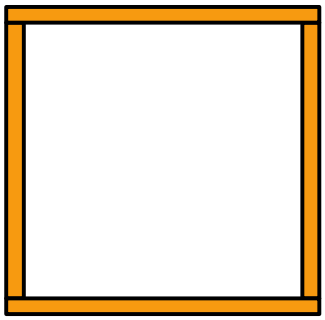

46. CASE(TI) SASSY

	Diagram symbol	Circuit symbol	Part name	Part number	Q'ty	Remarks
	①	K72003	FIXING BRACKET(TAMP B)	24H67821	1	
	②	K72004	FIXING BRACKET(TAMP A)	24H67811	1	
	③		TAMPER-A PWB ASSY | TAMPER-E PWB ASSY	81T19ZBA | 81T19ZBE	3	TAMPER PWB
	④	S72006	CBIMS*2*8*3GF	24V01031	4	Torque management
	⑤	K60085	GLUE,SCREW LOCK	92201082		Amount used = approx. 0.02g×6 points

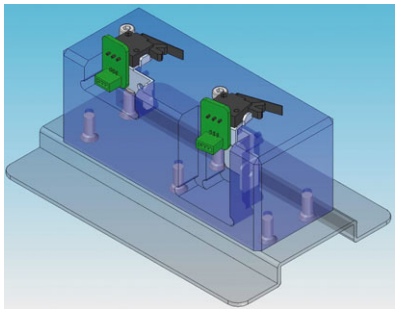

Acceptable even though any of the Tamper-A ~ Tamper-E is used.

[1] Mount the tamper PWB to the Fixing bracket (TAMP A) and Fixing bracket (TAMP B).
Apply GLUE SCREW LOCK after mounting.

A

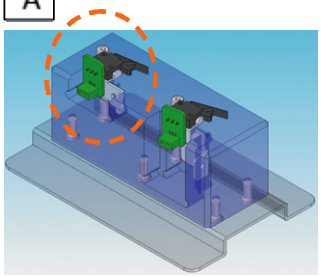

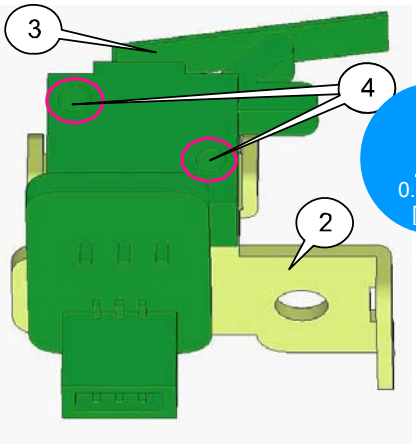

Application of GLUE SCREW LOCK
(Screw-fastened rear side)

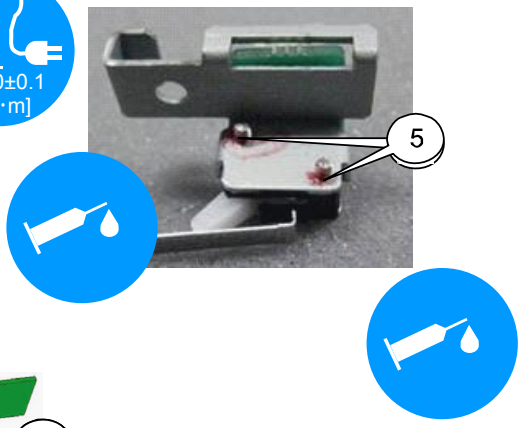

B

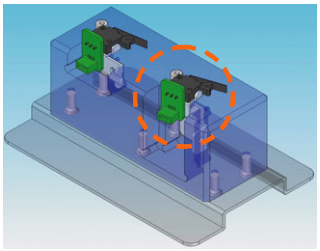

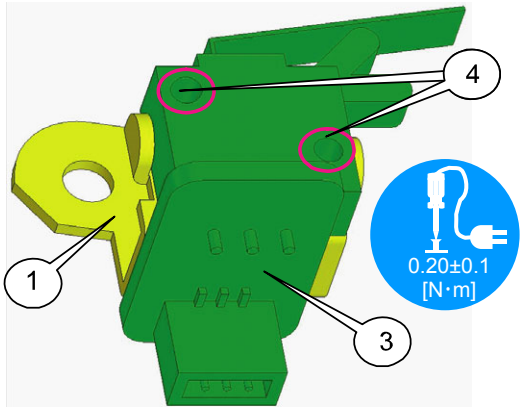

Application of GLUE SCREW LOCK
(Screw-fastened rear side)

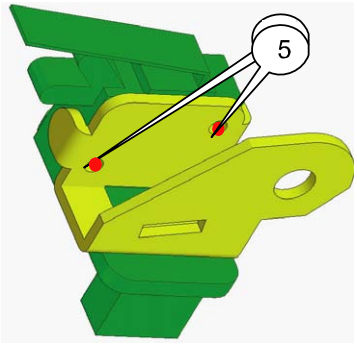

47. CASE(TI) SASSY

	Diagram symbol	Circuit symbol	Part name	Part number	Q'ty	Remarks
	①	K72002	CASE(TI)M ASSY	24HS4812	1	
	②		MOTHER PWB ASSY	81T19MA1	1	Torque management
	③	S72005	PL-CPIMS*3*8*3GF	24V00111	18	
	④	MT	CN6-WP(MT)160X,1061-26	7NH6V001	1	
	⑤	K72001	CASE(TI)A ASSY	24HS4802	1	
	⑥	K72012	CABLE CLIP(UAMS-05SN)	24C09891	5	

[1] Mount the Mother PWB to the Case (TI) M Assy.
Tighten the screws first as indicated by [1] and [2] in the illustration below. Then, tighten the remaining screws.
Insert the CN(MT) after that.

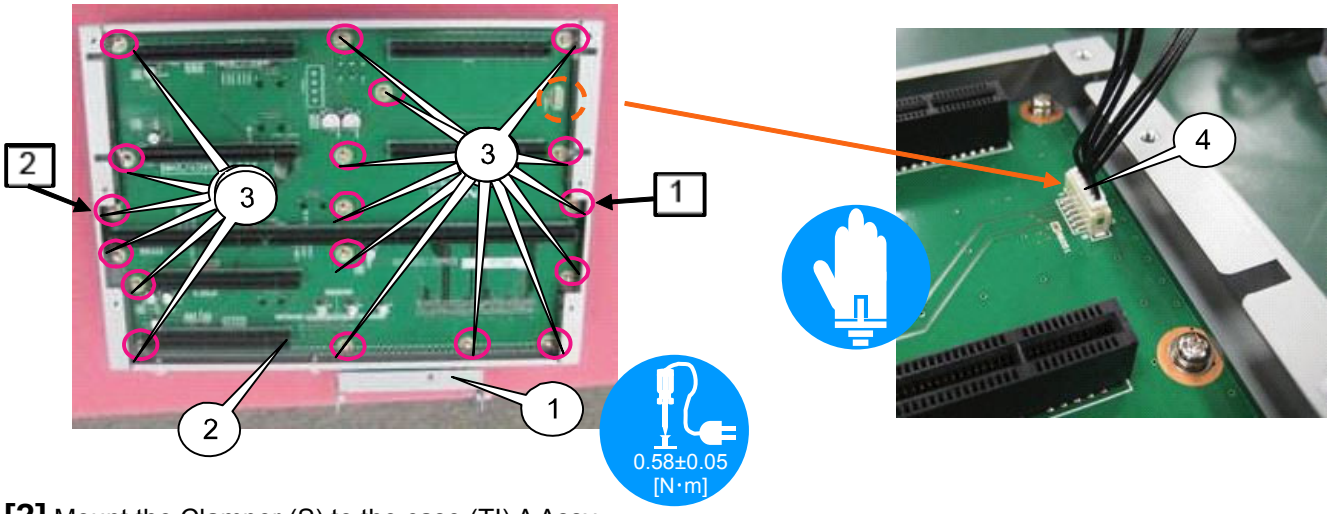

[2] Mount the Clamper (S) to the case (TI) A Assy.
Mount a clamper on the round hole in the mesh.

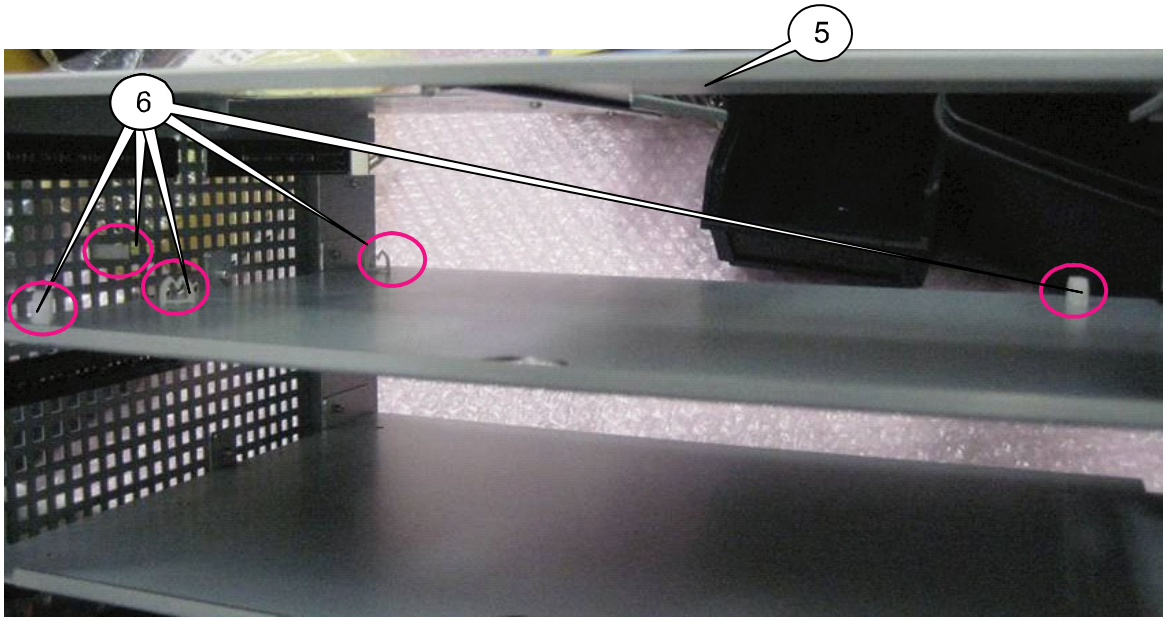

48. CASE(TI) SASSY

	Diagram symbol	Circuit symbol	Part name	Part number	Q'ty	Remarks
	①	S72008	PL-CPIMS*3*8*3GF	24V00111	1	Torque management
	②	S72007	PL-CPIMS*3*8*3GF	24V00111	1	Torque management

[1] Mount the TI tamper Sassy.

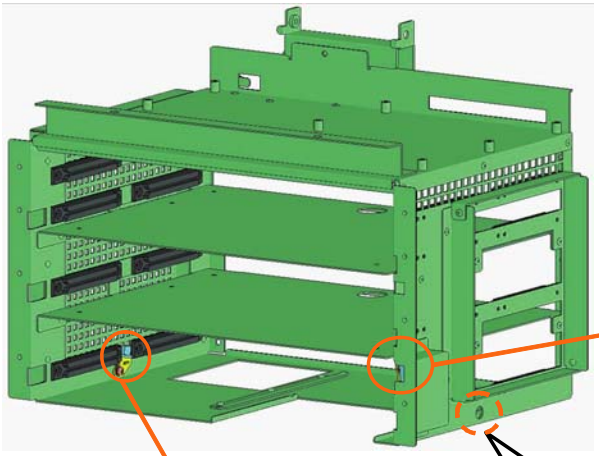

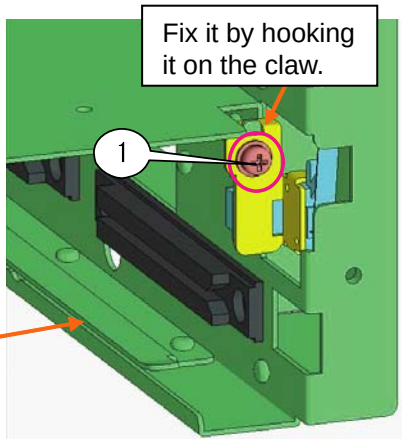

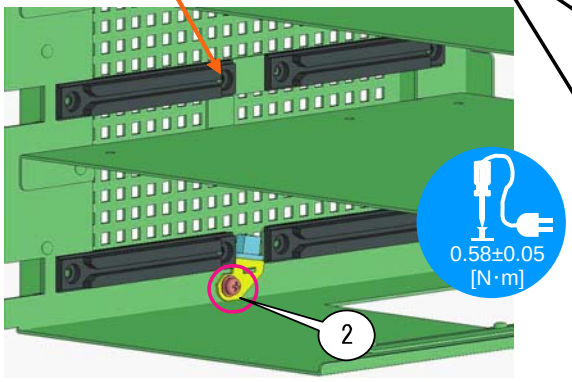

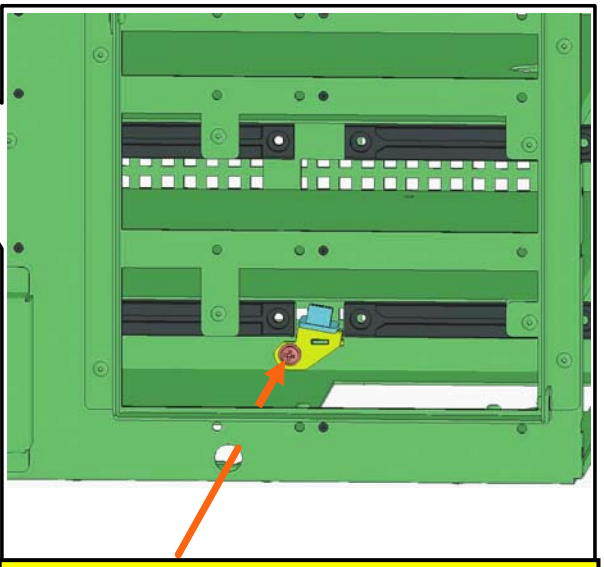

When mounting the tamper in this position, pass a screwdriver through the opposite round hole for screw fastening.

The switch shall be protruded from the bracket.

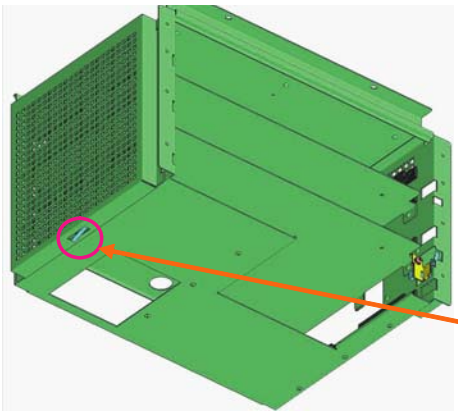

A metallic plate of the SW is protruded. Be careful not to break it as a result of hooking.
When putting it with the SW positioned downwards,
sidewise sliding is prohibited. Such a handling method
may result in applying stresses to the metallic plate.

49. CASE(TI) SASSY

	Diagram symbol	Circuit symbol	Part name	Part number	Q'ty	Remarks
	①	K72011	CUSHION(T1 L=100)	24J37321	1	
	②	S72003	PL-CPIMS*3*8*3GF	24V00111	7	Torque management

[1] Paste the cushion (T1 L=100) at the rear side of the case (TI) A Assy.
To be stuck based on the edge corner.

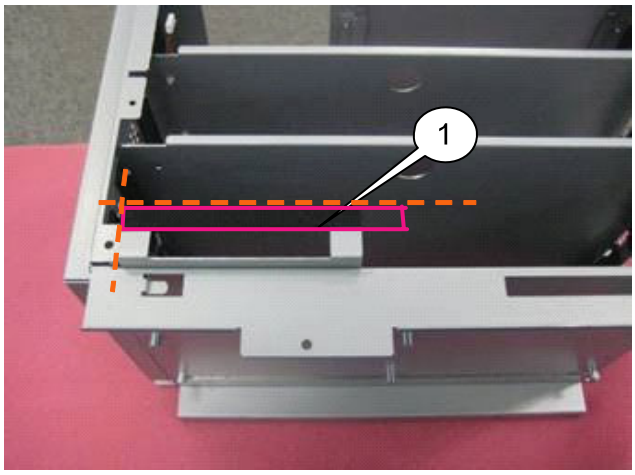

[2] Assemble the case (T1) M Assy and the case (T1) A Assy.
Tighten the screws first as indicated by [1] and [2] in the illustration below. Then, tighten the remaining screws.

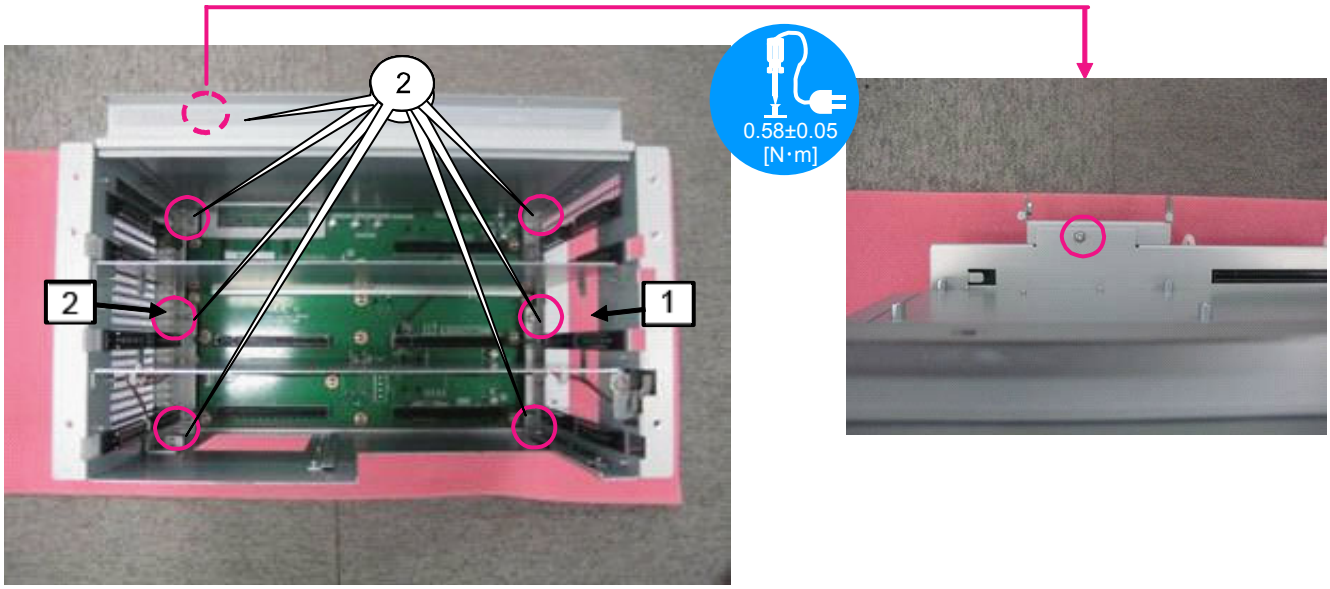

50. CASE(TI) SASSY

	Diagram symbol	Circuit symbol	Part name	Part number	Q'ty	Remarks
	①	K72013	ACETATE CLOTH TAPE	9R030010	0.01	L=200±10mm

[1] Complete cabling as far as each TAMPER PWB and insert the CN (MT) in each connector.
The CN (MT) is branched where the third clamper is passed as counted from the bottom.

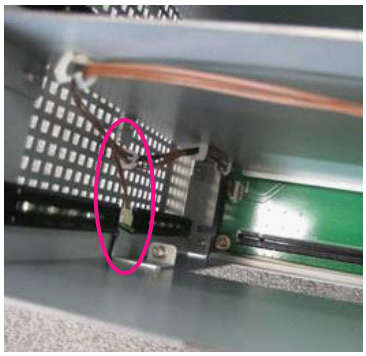

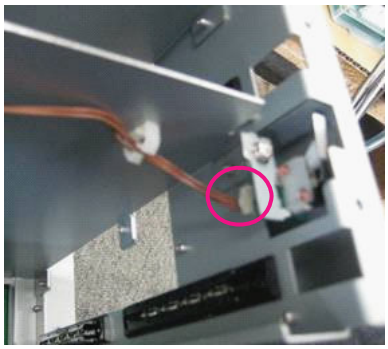

[2] Cut an acetate cloth tape to a piece of about 200mm and stick it to the CN (MT).

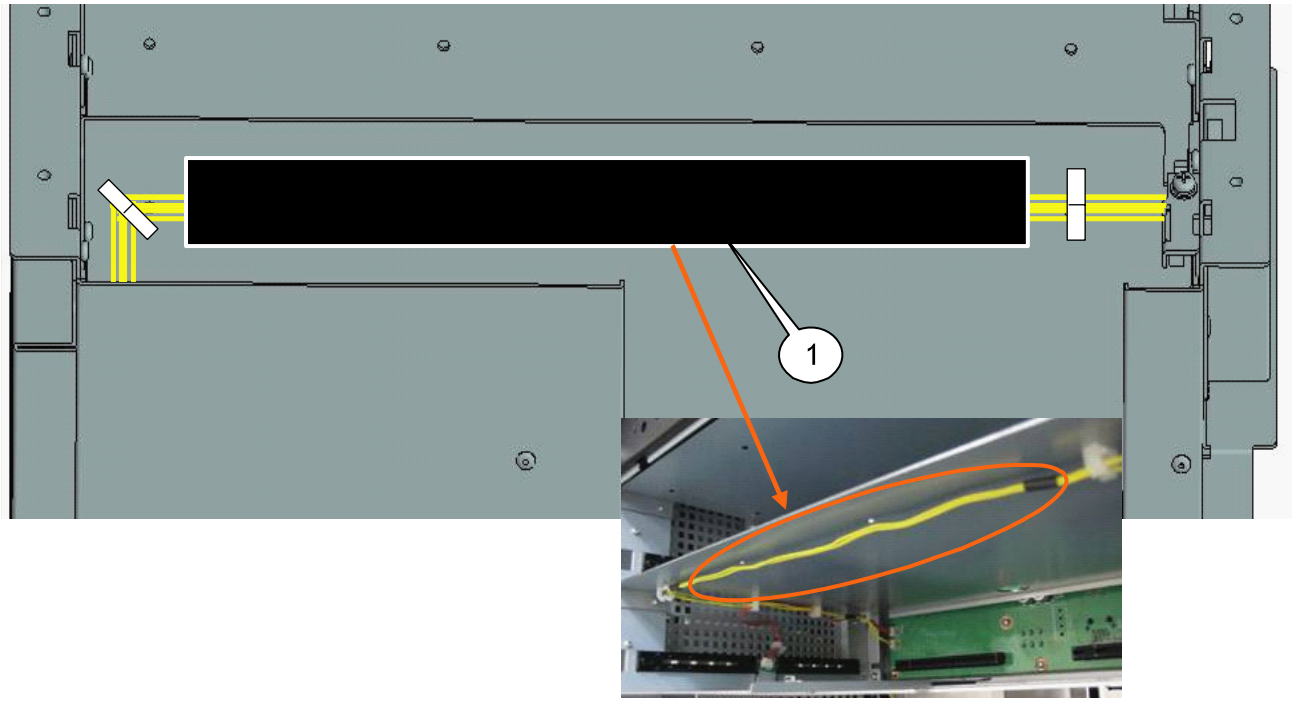

51. CASE(TI) SASSY

[Reference]
Prior to mounting the PJDIV PWB, make operation check for the TAMPER PWB.

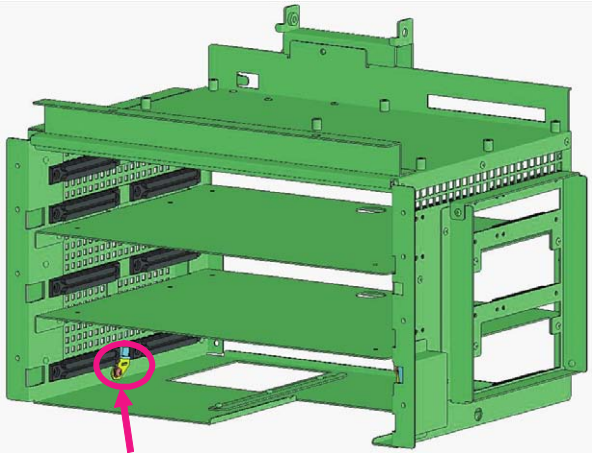

Objective TAMPER PWB for testing

• Work to be carried out
Insert a jig board in the MOTHER PWB of the assembled case (T1) Sassy and apply a circuit tester to the cable with a crocodile clip and the cable not taped, both located on the jig board.
This action is taken for the continuity test at the time of switching of the tamper switch.

If continuity is confirmed in the state that the tamper switch is turned off, this implies that the switch has passed the test.
In the case of NG, check whether the SASSY suffers from any defective assembly and try it again.

If there is no failure in assembly, replace the TAMPER PWB and try the testing again.

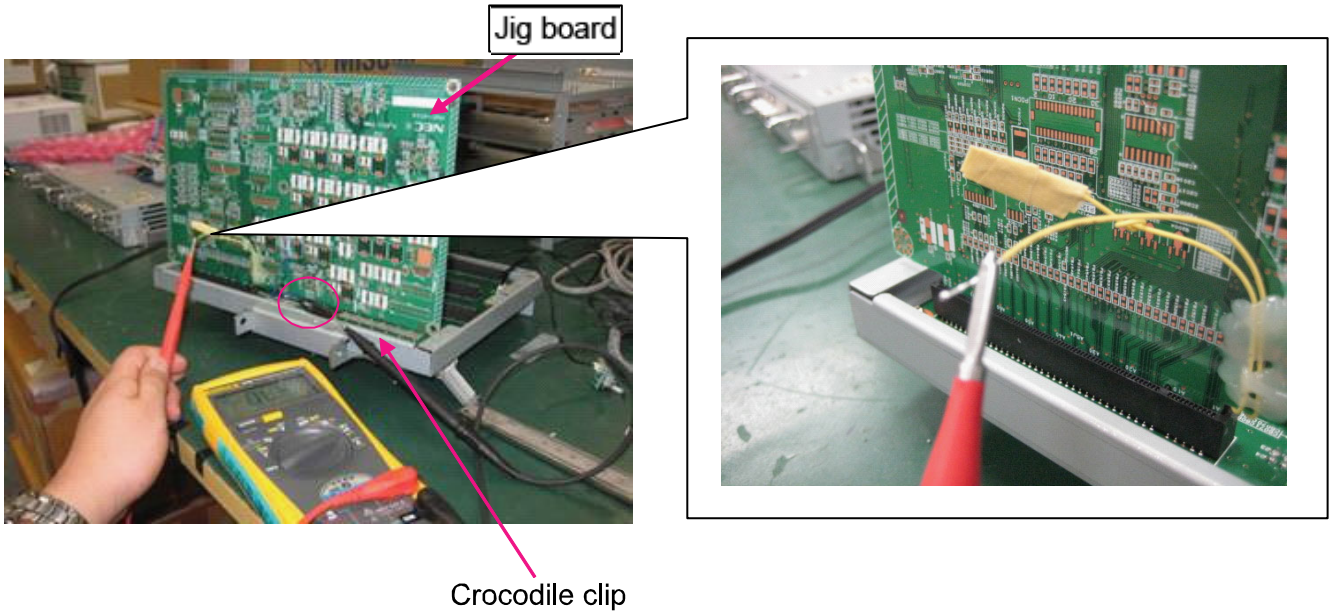

52. CASE(TI) SASSY

	Diagram symbol	Circuit symbol	Part name	Part number	Q'ty	Remarks
	①		PJDIV PWB ASSY	81T19Y01	1	
	②	S72004	PL-CPIMS*3*8*3GF	24V00111	9	Torque management

[1] Insert the DIV PWB to the Mother PWB, and fix it with the screw.

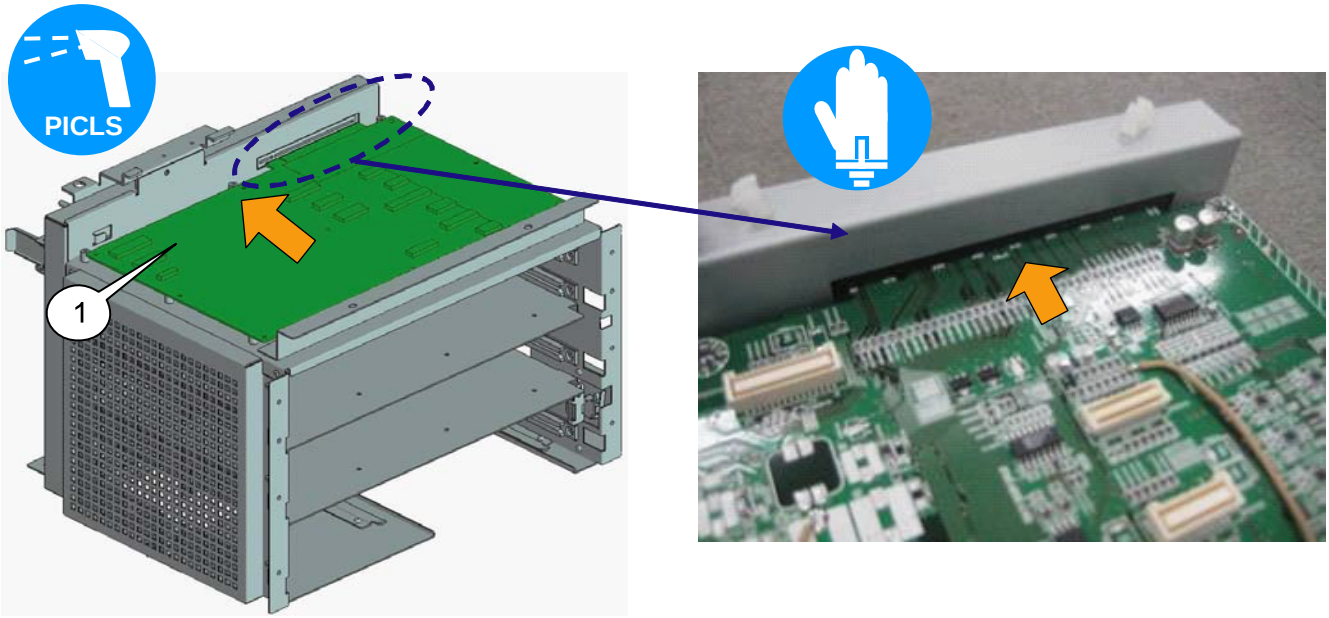

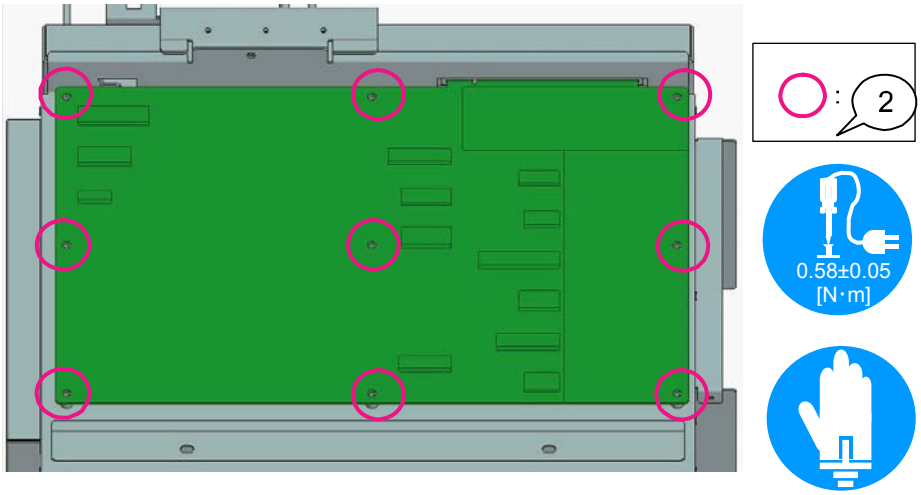

53. CASE(TI) SASSY

	Diagram symbol	Circuit symbol	Part name	Part number	Q'ty	Remarks
	①	K72005	HINGE(TI RELAY PWB)L	24H68541	1	
	②	K72006	HINGE(TI RELAY PWB)R	24H67381	1	
	③		PL-CPIMS*3*8*3GF	24V00111	2	Torque management, S72009,10
	④	K72012	CABLE CLIP(UAMS-05SN)	24C09891	2	
	⑤		WIRE SADDLE(C)	16287421	1	

[1] Mount the Hinge (TI relay PWB) R, L to the Case (TI) M Assy.
After installation, check whether the hinge is open.

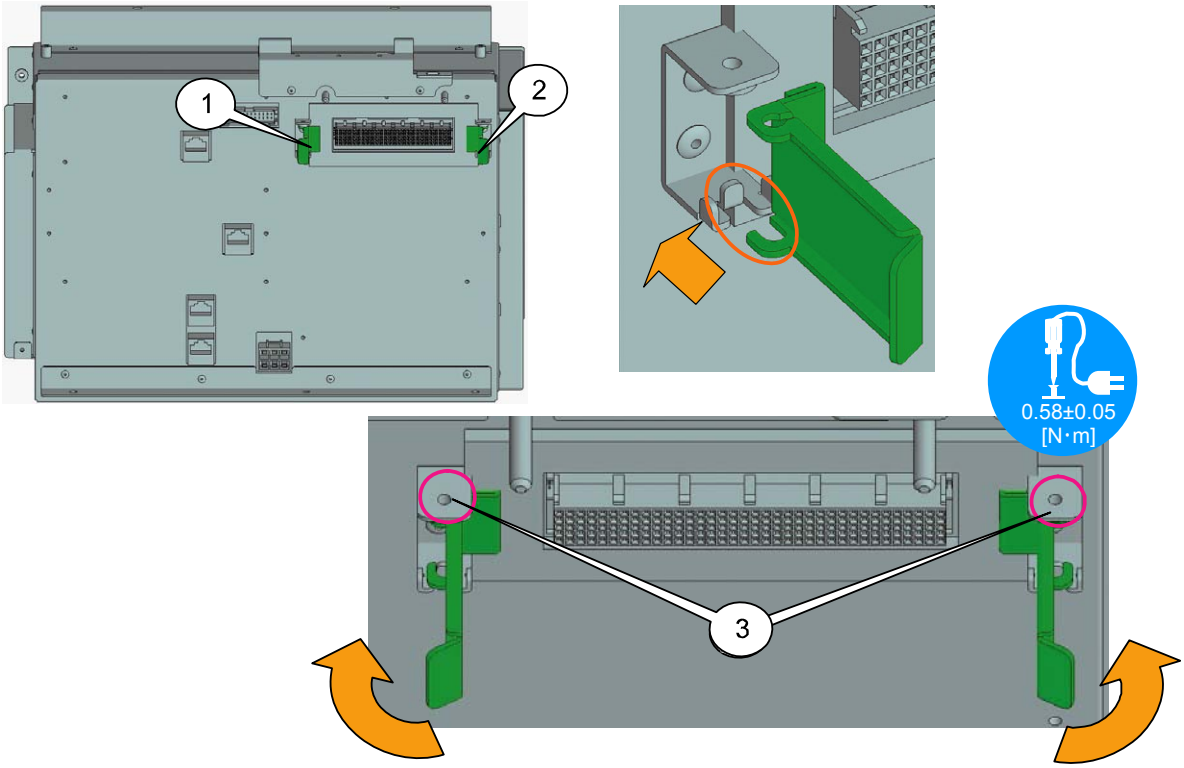

[2] Mount the Cable clip (UAMS-05SN) and Wire saddle (C) to the Case (TI) M Assy.

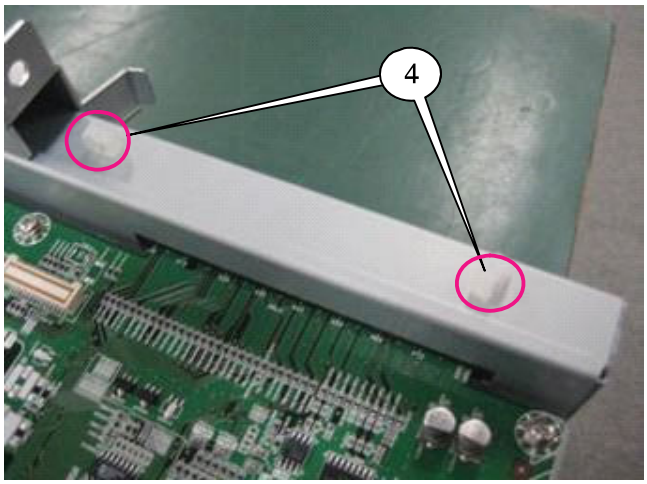

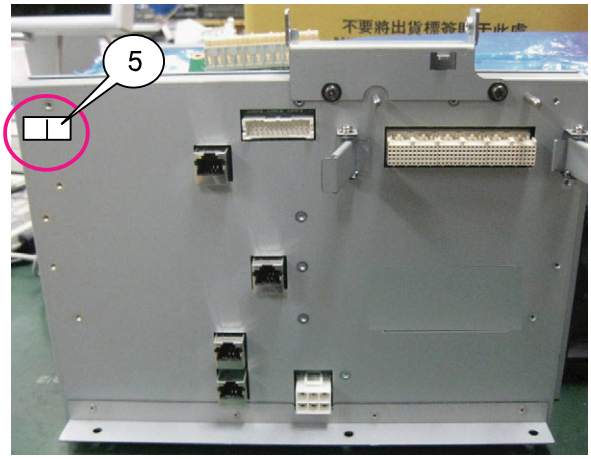

54. SET ASSY

	Diagram symbol	Circuit symbol	Part name	Part number	Q'ty	Remarks
	①		LAMP COVER(S) SASSY		1	
	②	S60068	PL-CPIMS*4*10*3KF	24V00461	5	Torque management
	③	K60081	BAND(L=100 T18R)	24C09121	1	

[1] Mount the Lamp cover (S) Sassy to the Set Assy.

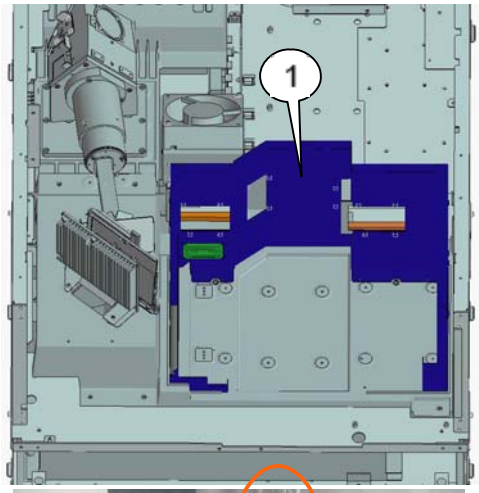

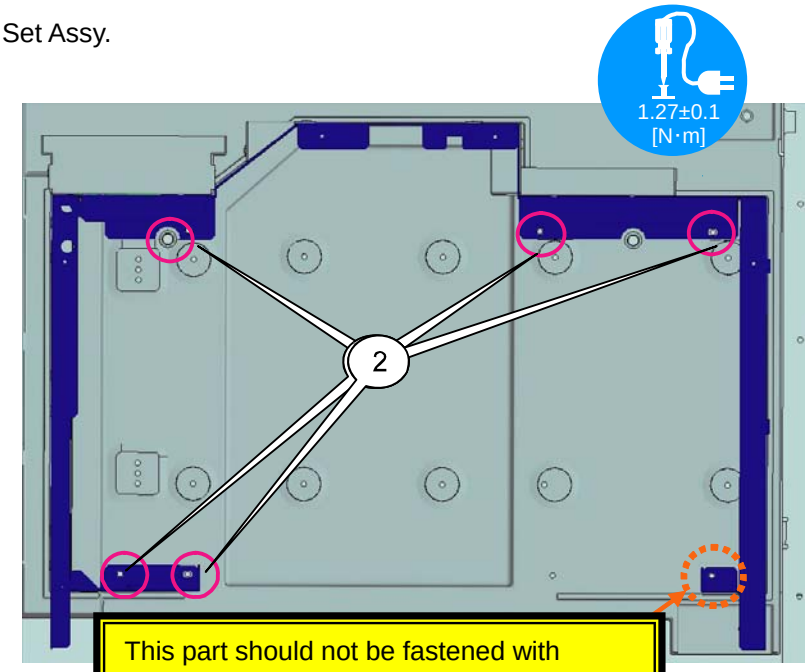

This part should not be fastened with screws because it will be screw-fastened together later.

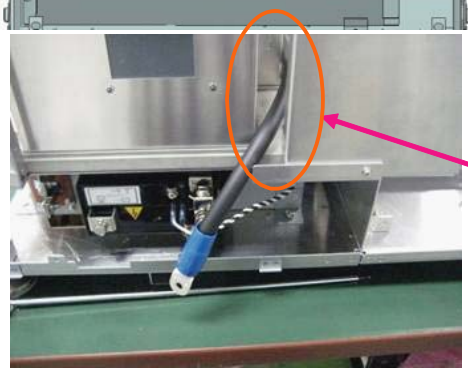

The cable should be protruded from a round space.

[2] Mount the CN(L+) to the Igniter.

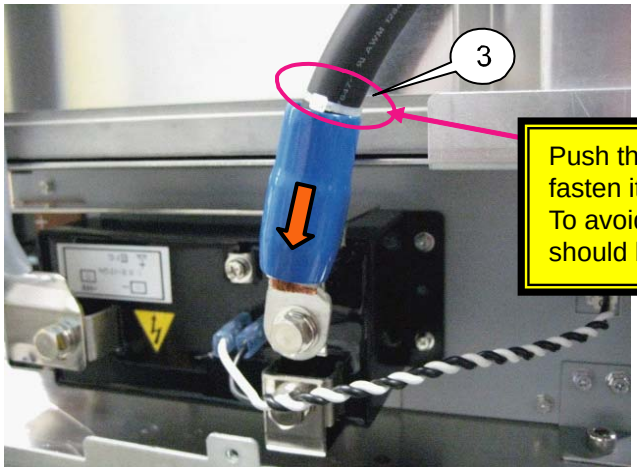

Push the terminal cover in the direction of the arrow and fasten it with a harness band so that it is not shifted.
To avoid the shifting of the terminal cover, any surplus band should be cut off with a margin of 5mm to remain.

Tool: OS 14 mm box driver bit

55. SET ASSY

	Diagram symbol	Circuit symbol	Part name	Part number	Q'ty	Remarks
	①	K60029	REFLECTOR BASE(PA67LL)	12JT4251	1	

[1] Remove the harness band that is attached to the reflector base (PA67LL).
Keep the accessory label because it will be stuck in the latter process.

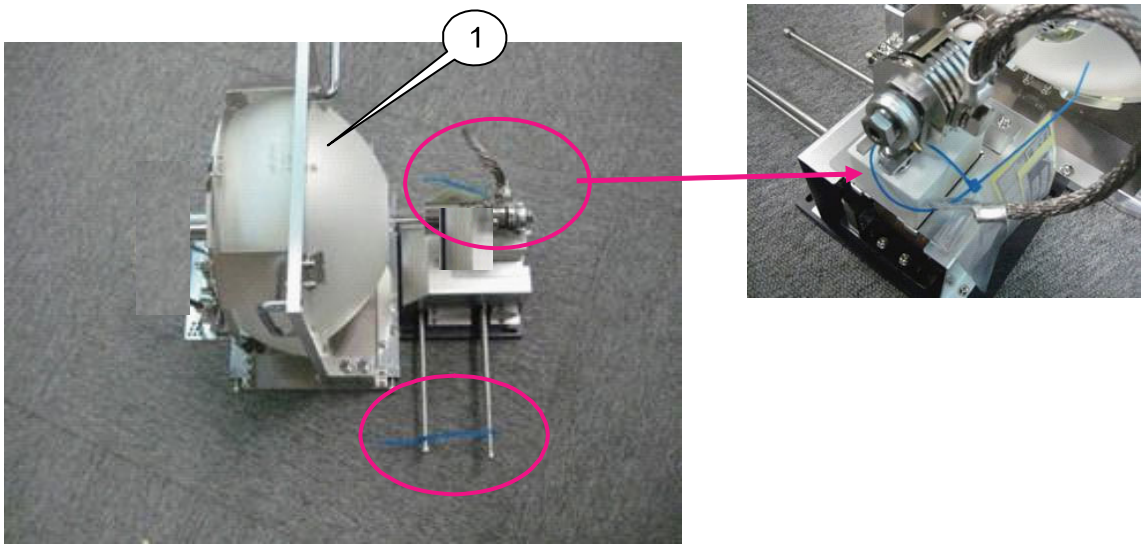

56. SET ASSY

	Diagram symbol	Circuit symbol	Part name	Part number	Q'ty	Remarks
	①	S60029	PL-CPIMS*4*16*3GF	24V00471	8	Torque management

[1] Fix the Reflector base on the Lamp base.
For fixing, the reflector base (PA67) shall be pushed against the pin of the Lamp Base Assy.

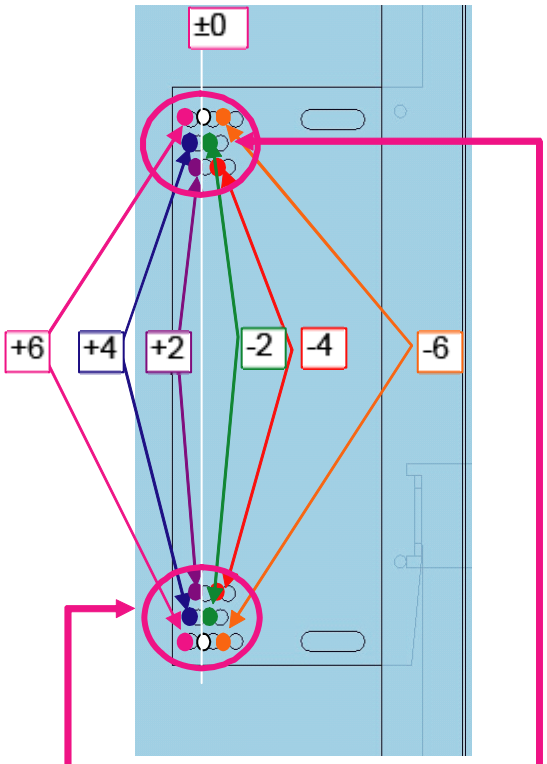

[2] When fixing the reflector base to the lamp base, fasten the screws in the positions of -2, -4, -6, 0, +2, +4, and +6.

Anode side of the reflector base

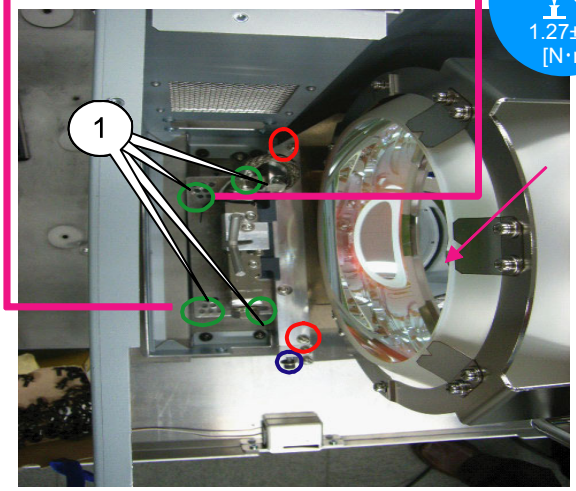

Cathode side of the reflector base

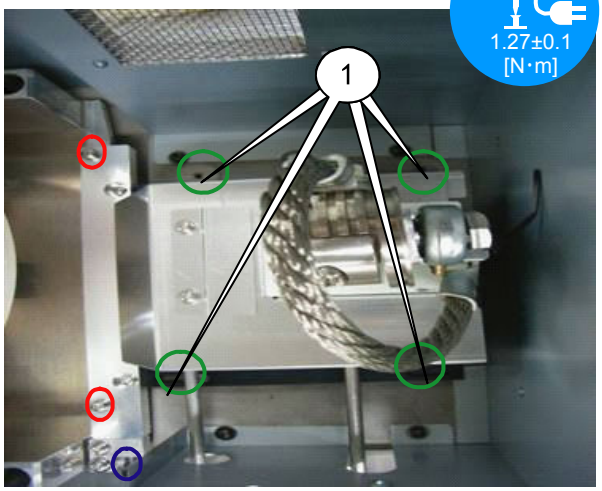

* Push the reflector base (PA67) to the lamp fan side and fix it with the green circle screws.
Remove the red circle screws and abandon them.
Tighten the blue circle screws.
The tightening torque for the blue circle screws is 1.27±0.1N·m.

57. SET ASSY

	Diagram symbol	Circuit symbol	Part name	Part number	Q'ty	Remarks
	①		BRACKET(LPC)	24H62461	1	
			Supplied screw (+)		1	Torque management
			Supplied screw (–)		1	Torque management

[1] Install the respective cables of the reflector base (PA67) anode and cathode on the terminal plate (PA67).

Safety

Tool: OS 12mm box socket

Remove screws from the cathode terminal plate and put the bracket (LPC) on the cathode cable terminal of the reflector base. Install this bracket by means of the removed screws.

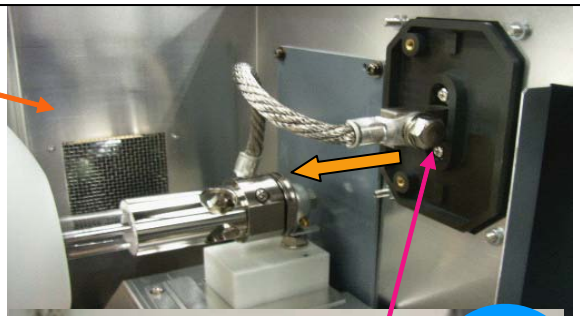

Install the cathode cable horizontally on the terminal plate.

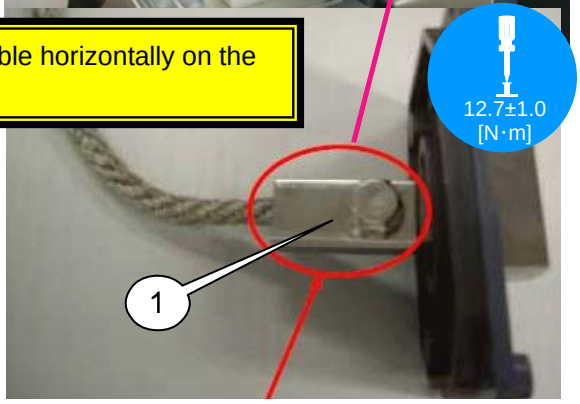

Tighten the bracket (LPC) together with cables.

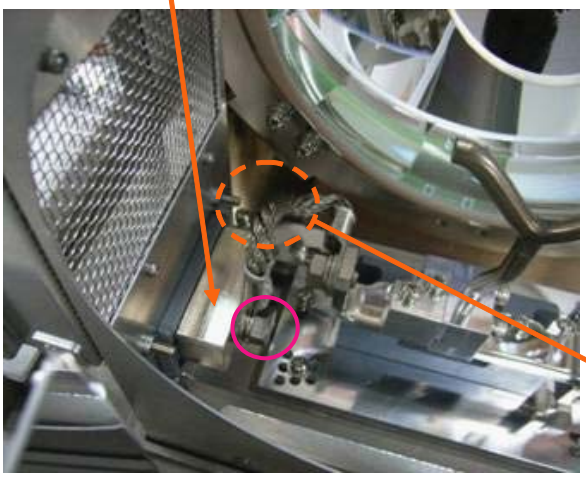

Remove screws from the anode terminal plate and install the anode cable of the reflector base by means of the removed screws.

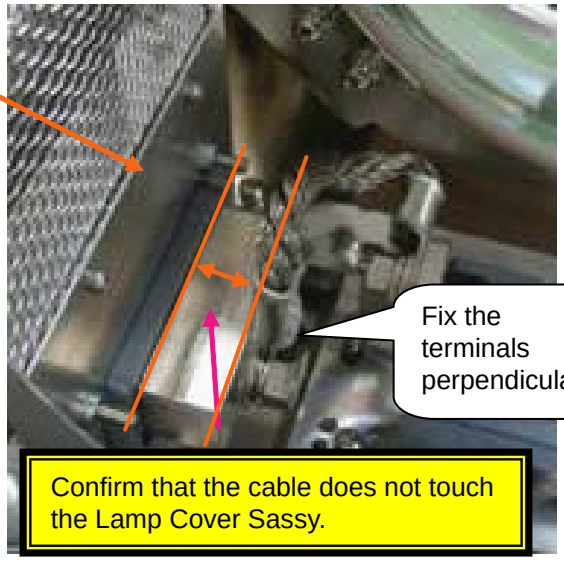

58. SET ASSY

	Diagram symbol	Circuit symbol	Part name	Part number	Q'ty	Remarks
	①		LAMP COVER(BOTTOM)S2	24H69501	1	
	②	S60023	PL-CPIMS*4*10*3KF	24V00461	2	Torque management
	③		Lamp accessory seal		2	
	④	K60005	LABEL(LAMP)	24L56451	1	

[1] Mount the Lamp cover (bottom) to the Set Assy.

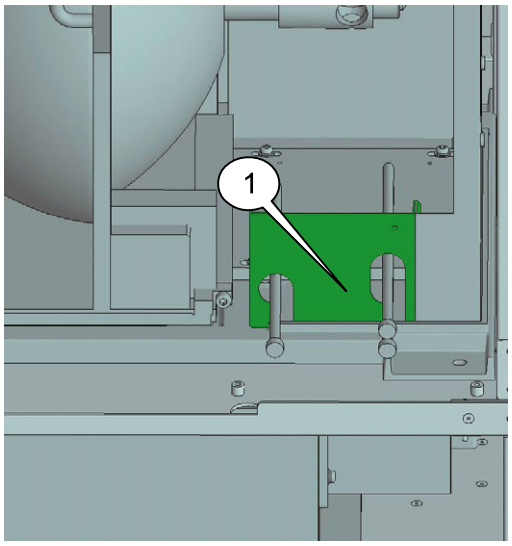

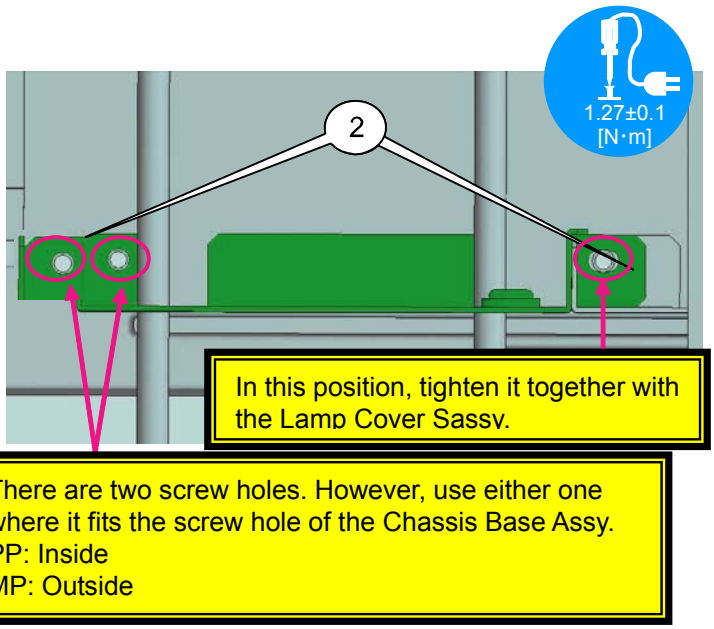

[2] Paste the Seal supplied to the Reflector base (PA67) on the Set Assy.
Join the vertical plate of the reflector base with the seal center. Apply and stick it to the frame on the rear side.
Apply the label (LAMP) to the frame on the rear side. Adhesion shall be based on the screw position.

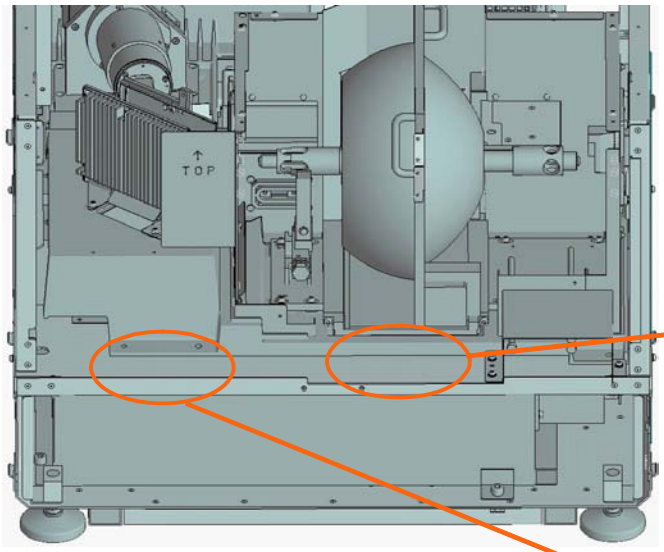

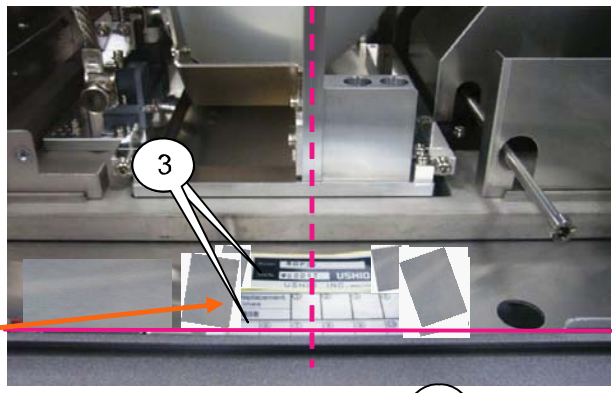

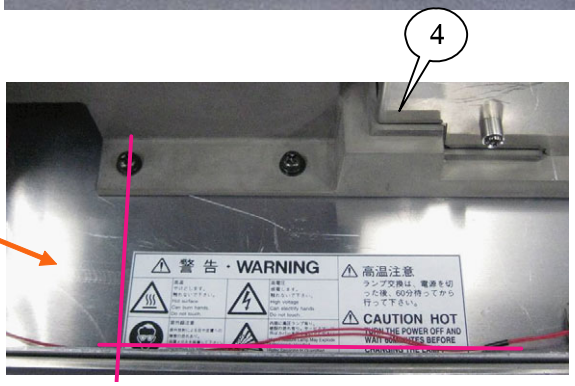

59. SET ASSY

	Diagram symbol	Circuit symbol	Part name	Part number	Q'ty	Remarks
	①		LAMP COVER T SASSY		1	
	②	S60069	PL-CPIMS*3*8*3GF	24V00111	8	

[1] Mount the Lamp cover T Sassy.

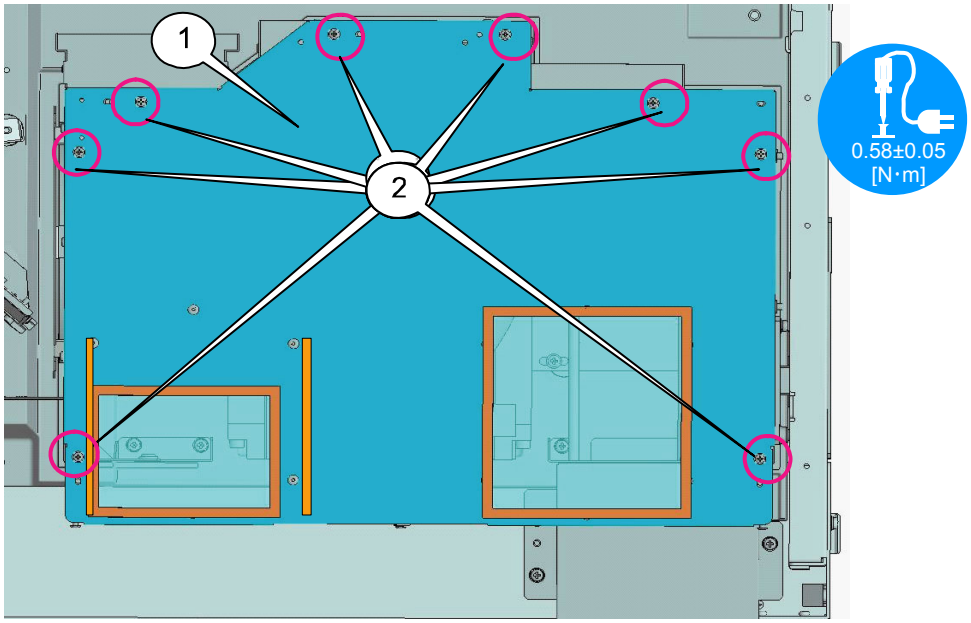

60. SET ASSY

	Diagram symbol	Circuit symbol	Part name	Part number	Q'ty	Remarks
	①		PLATE(LPS)	24H67511	1	
	②	K60086	TUBE(ST-1100DG UL)	9R050007	2	L=240mm(-0mm,+5mm)
	③		Supplied screw (terminal plate)		1	Torque management
	④		Supplied screw (igniter)		1	Torque management

[1] Cover the plate with the tube (ST-1100DG UL) in the direction of the arrow and fix it with the use of heat contraction.
After that, put another tube (ST-1100DG UL) for fixing by heat contraction.
Heat contraction is caused with the aid of a dryer. Be careful not to cause a burn.

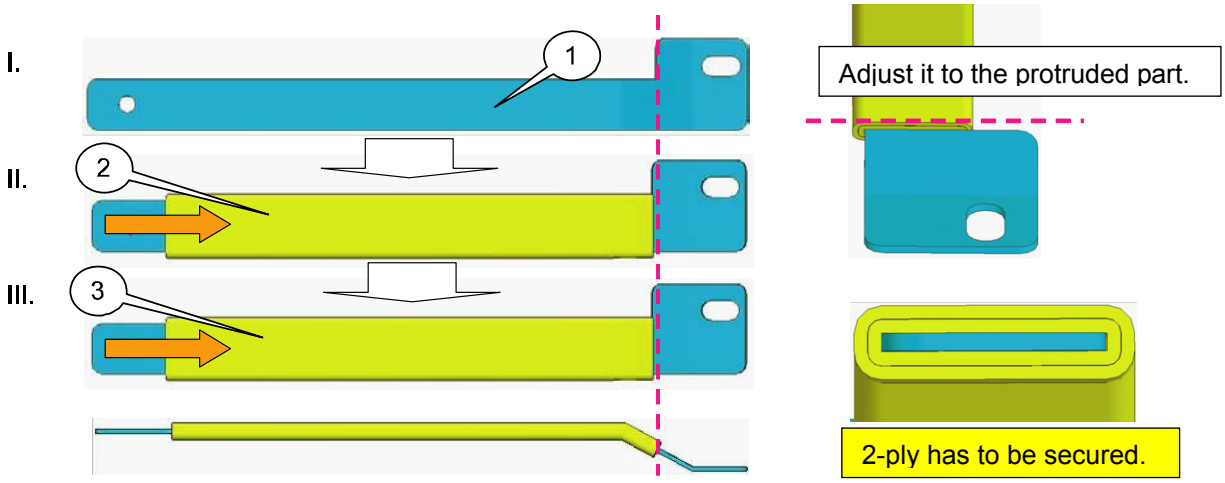

[2] Using the accessory nuts, install the plate (LPS) on the igniter and the terminal plate (PA67)(-), respectively.
Install the plate on the terminal plate first. Then, install it on the igniter side.

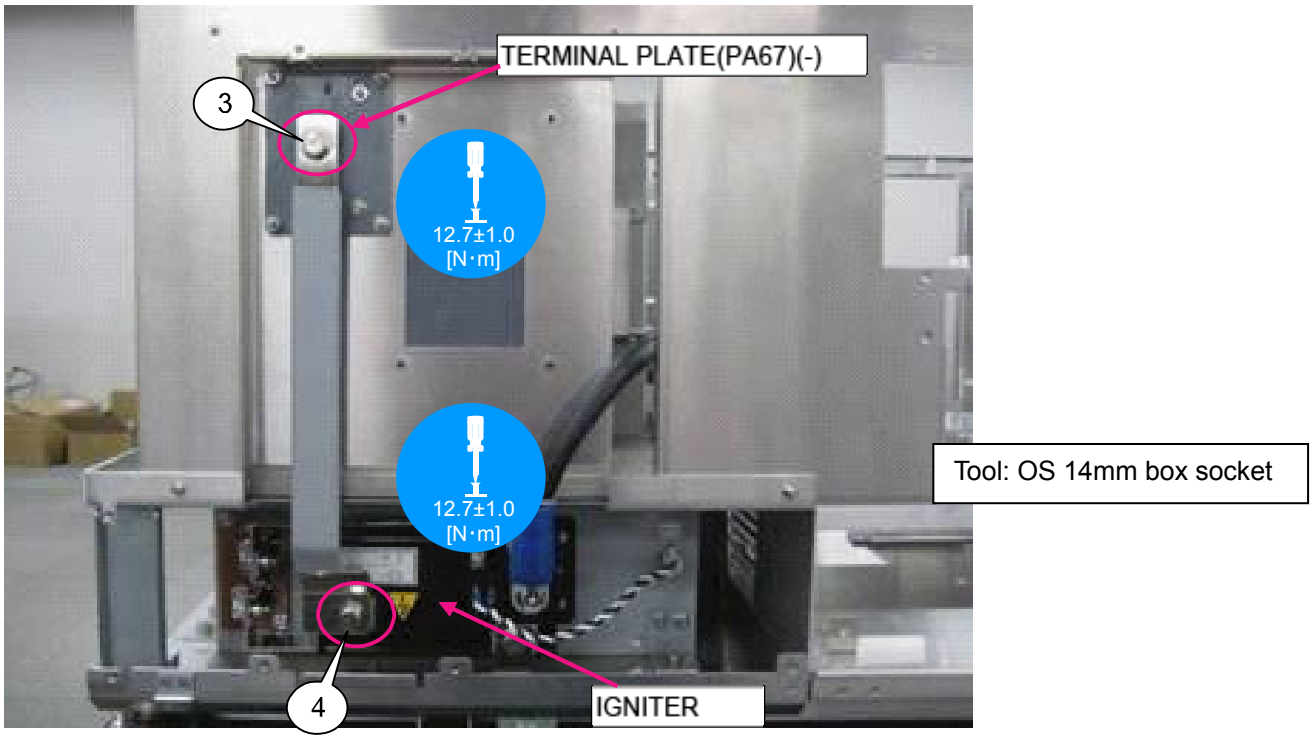

61. SET ASSY

	Diagram symbol	Circuit symbol	Part name	Part number	Q'ty	Remarks
	①	K49001	INSULATION PLATE A	7N247361	1	
	②	K49003	INSULATION PLATE B	7N247371	1	
	③	K49002	PUSH RIVET(NRP460)	24C08461	4	
	④	S60053	PL-CPIMS*4*10*3KF	24V00461	4	Torque management

[1] Mount the Insulation plate C to the Insulation plate A.

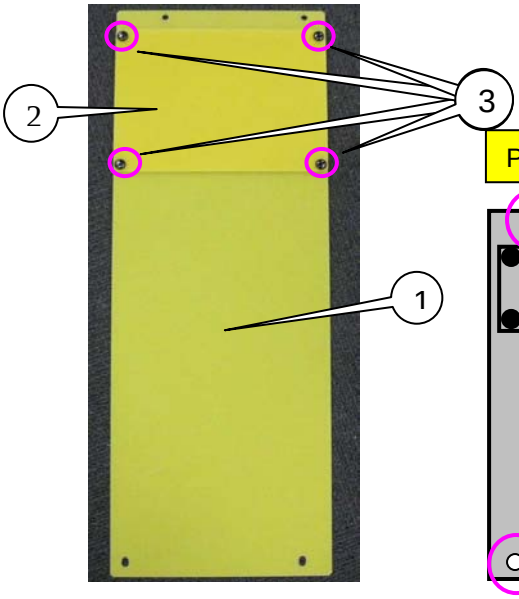

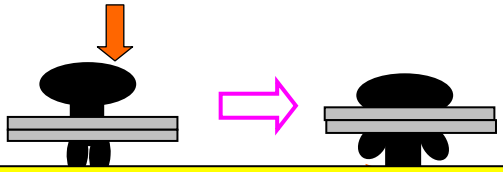

Push the rivet in and confirm that the rivet foot is protruded.

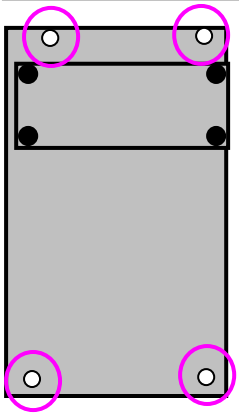

Place the surface so that the screw holes of the insulation plate are positioned as illustrated at left, and put the insulation plate C on the surface.

[2] Mount on the set the insulation plate that has been assembled as per previous item.
Fix it being pinched by the lower bend of the chassis base.
Mount the insulation plate C being faced to the outside.

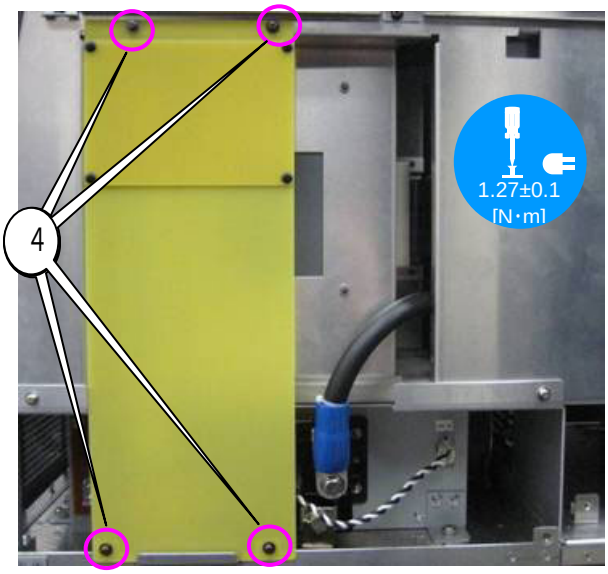

62. SET ASSY

	Diagram symbol	Circuit symbol	Part name	Part number	Q'ty	Remarks
	①		SHIELD PLATE(ROD)	24H68491	1	
	②	S60030	PL-CPIMS*4*10*3KF	24V00461	2	Torque management
	③	K60032	OPT ENGINE(PA76)	24BS7941	1	
	④	S60032	HHCS*5*16*3GF	24V00501	6	Torque management

[1] Mount the Shield plate (rod).
Install it after peeling off the protection sheet from the shield plate (ROD).

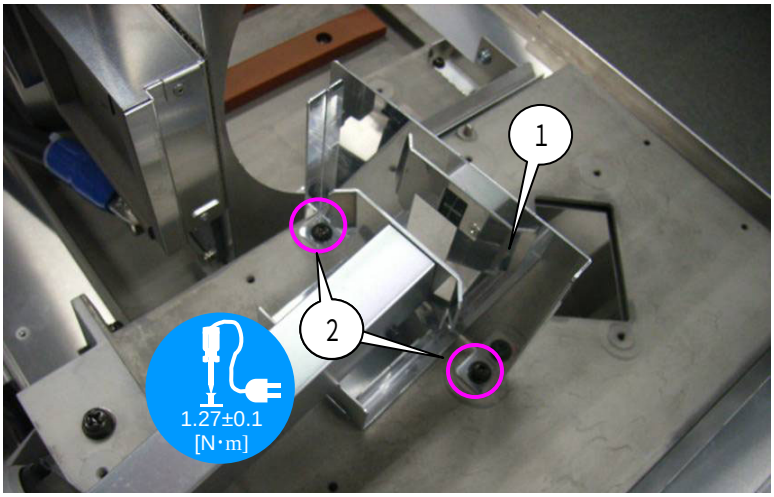

[2] Mount the OPT engine (PA76) to the Engine base Assy.
Install the rod after peeling off its protection sheet.
Peel off the protection sheet on the lens side before the Prism Sassy is installed.

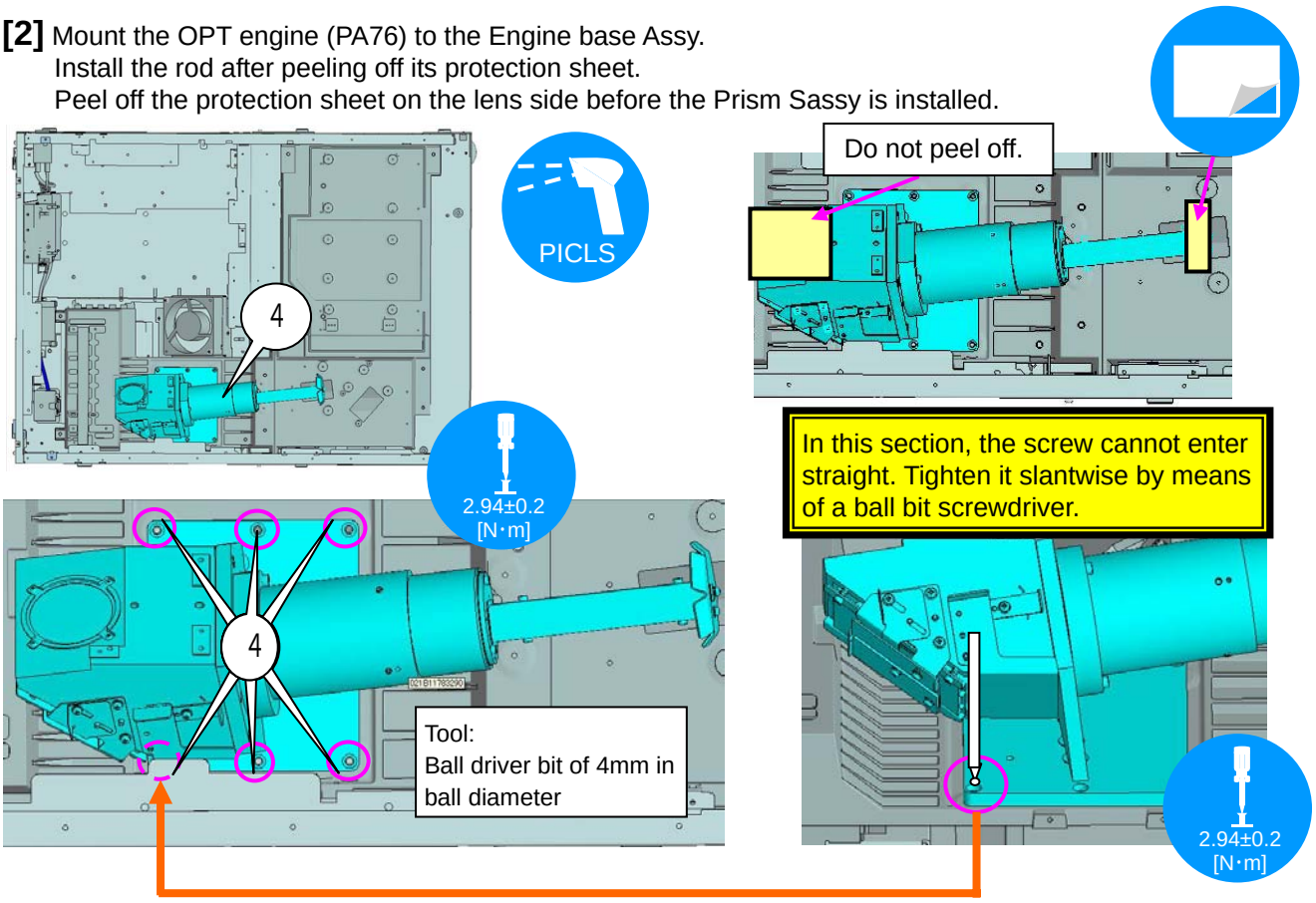

63. SET ASSY

Assembly of the Prism Sassy and the OPT Engine (contents for reference)

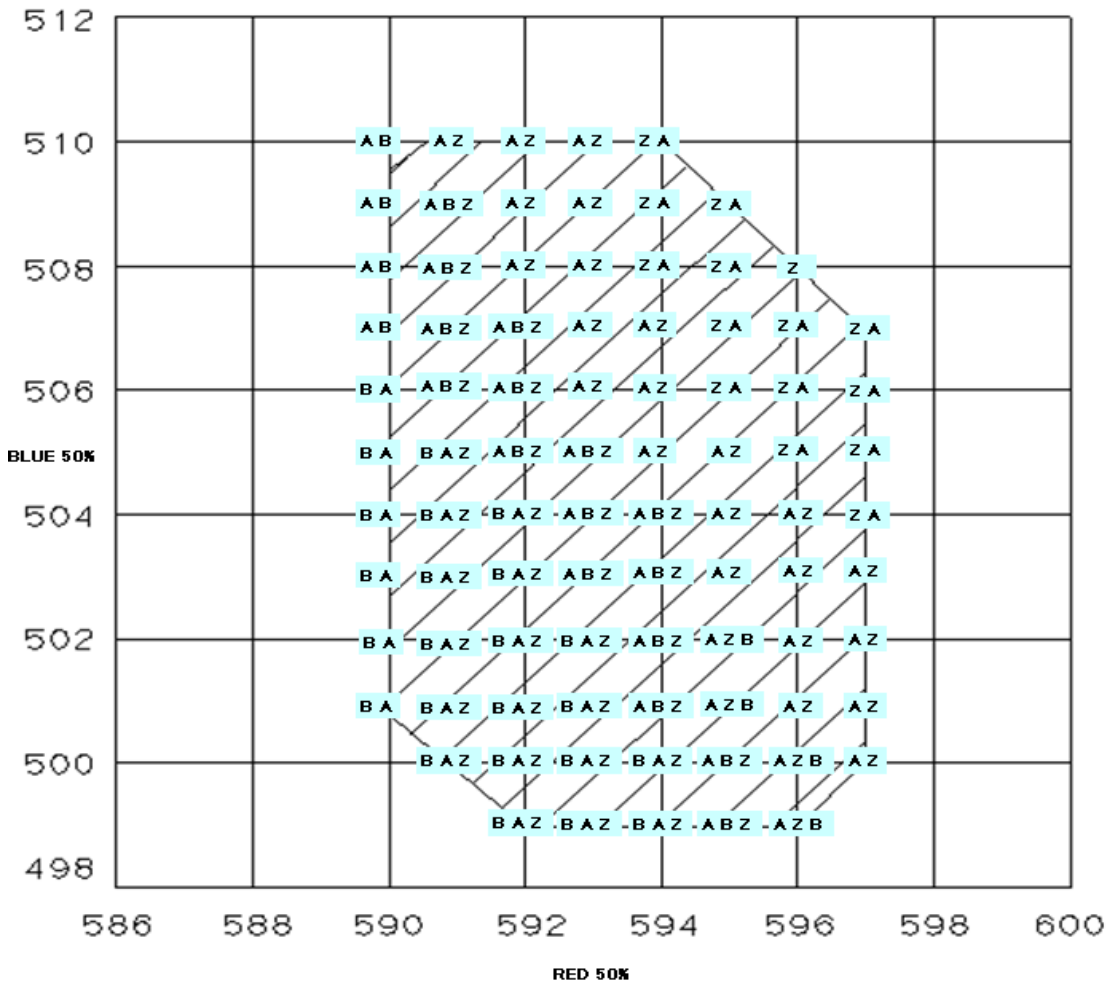

64. SET ASSY

	Diagram symbol	Circuit symbol	Part name	Part number	Q'ty	Remarks
	①		L-SENS SASSY		1	
	②		SHUTTER(SENSOR)	24H68332	1	
	③	S60075	PL-CPIMS*3*8*3GF	24V00111	2	Torque management
	④		COLD MIRROR SASSY		1	
	⑤	S60064	PL-CPIMS*4*10*3KF	24V00461	2	Torque management
	⑥		HEAT SINK SASSY		1	
	⑦	S60067	PL-CPIMS*4*10*3KF	24V00461	2	Torque management
	⑧		PL-CPIMS*3*8*3GF	24V00111	1	Torque management
	⑨		PIWA*4*3GF	24V00661	1	

[1] Mount the L-SENS Sassy to the OPT engine, then mount the Shutter (sensor).

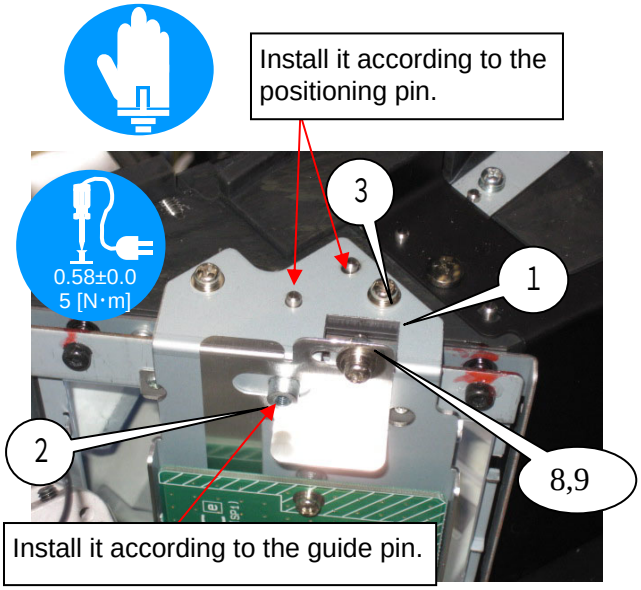

[2] After assembling the Cold mirror Sassy and Heat sink Sassy, mount them to the Set Assy.

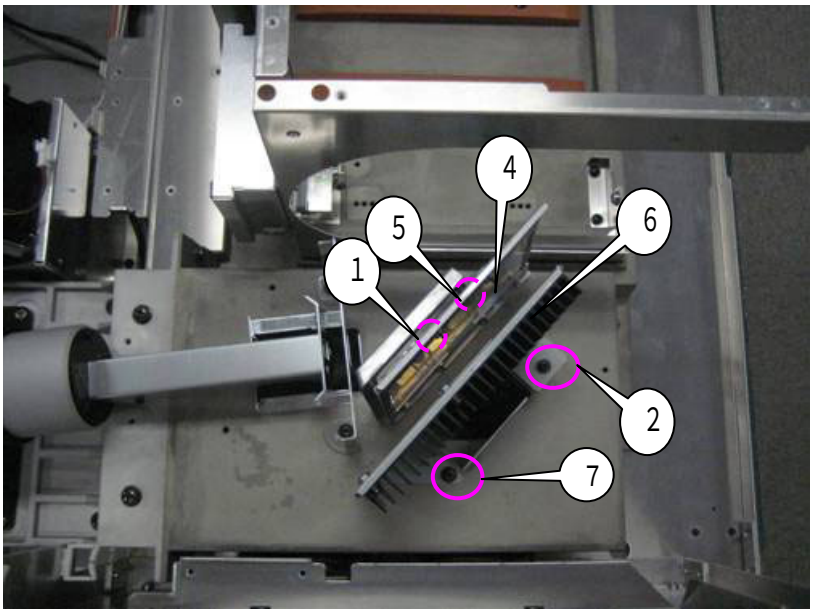

* Insert the shutter (sensor) in the holder slit.

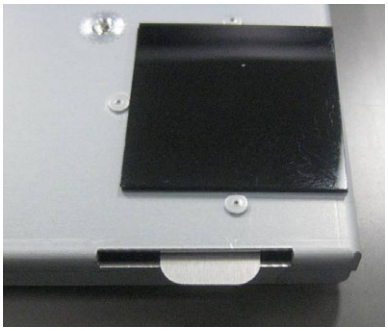

65. SET ASSY

	Diagram symbol	Circuit symbol	Part name	Part number	Q'ty	Remarks
	①		SHIELD PLATE(ENGINE)A	24H67772	1	
	②	S60010	PL-CPIMS*4*10*3KF	24V00461	3	Torque management
	③		SHIELD PLATE(ENGINE)C	24H67791	1	
	④	S60008	PL-CPIMS*3*8*3GF	24V00111	2	Torque management

[1] Mount the Shield plate (engine) A to the Set Assy.

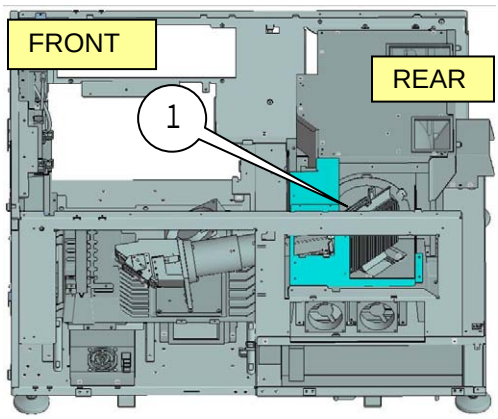

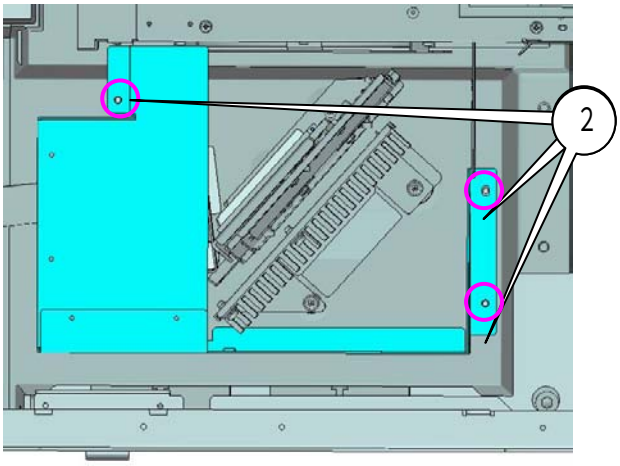

[2] Mount the Shield plate (engine) C to the Shield plate (engine) A.

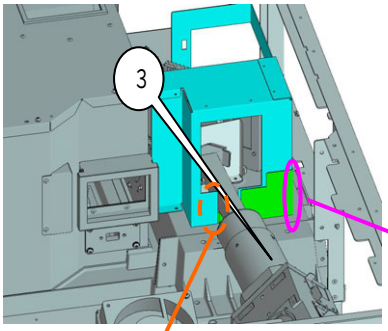

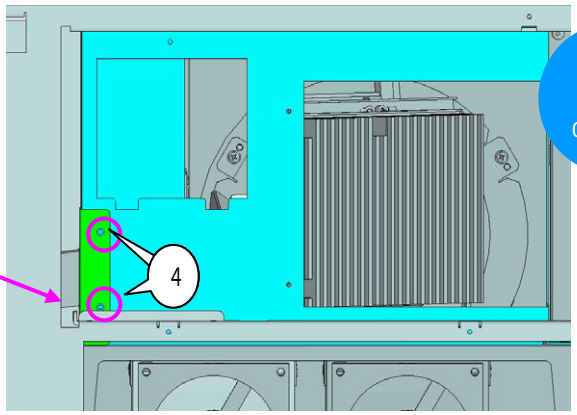

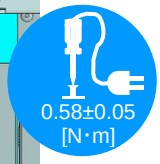

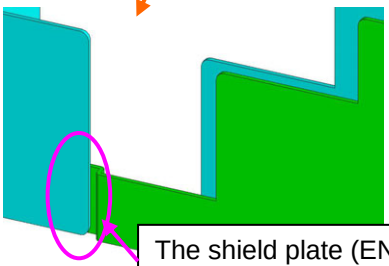

The shield plate (ENGINE) C shall be hooked on inside of the shield plate (ENGINE) A.

66. SET ASSY

	Diagram symbol	Circuit symbol	Part name	Part number	Q'ty	Remarks
	①		SHIELD PLATE(ENGINE)E	24H62501	1	
	②	S60007	PL-CPIMS*3*8*3GF	24V00111	1	Torque management
	③		SHIELD PLATE(ENGINE)F	24H62511	1	
	④	S60006	PL-CPIMS*3*8*3GF	24V00111	2	Torque management

[1] Mount the Shield plate (engine) E to the Shield plate (engine) A.

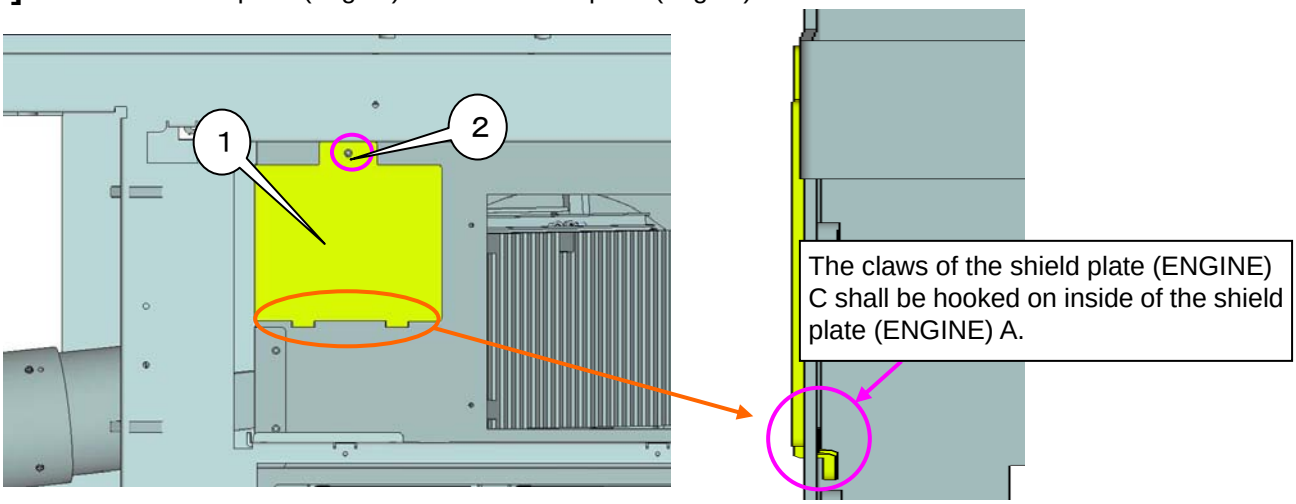

[2] Mount the Shield plate (engine) A.

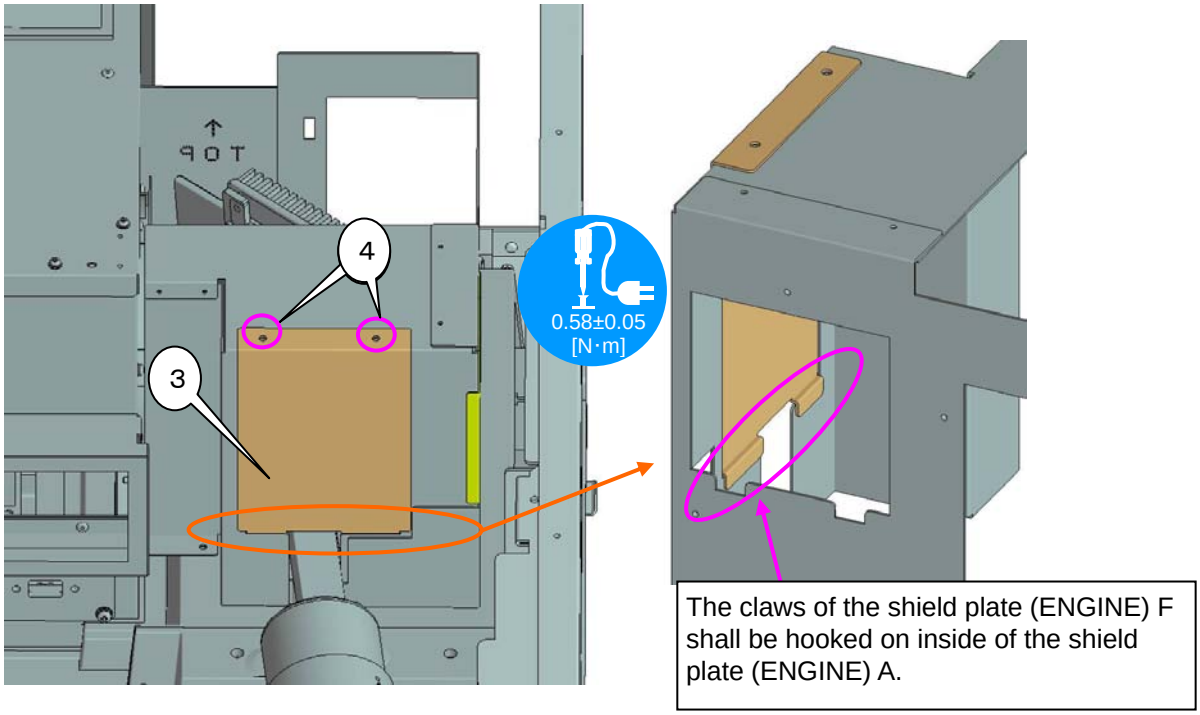

67. SET ASSY

	Diagram symbol	Circuit symbol	Part name	Part number	Q'ty	Remarks
	①		SHIELD PLATE(ENGINE)B	24H67782	1	
	②	S60009	PL-CPIMS*3*8*3GF	24V00111	3	Torque management
	③		FIXING BRACKET(3D CON)	24P06591	1	
	④		PLATE(HIDE 3D CON)	24P06601	1	
	⑤	S51001	PL-CPIMS*3*8*3GF	24V00111	2	Torque management
	⑥	S60055	PL-CPIMS*4*10*3KF	24V00461	2	Torque management

[1] Mount the Shield plate (engine) E to the Shield plate (engine) A.

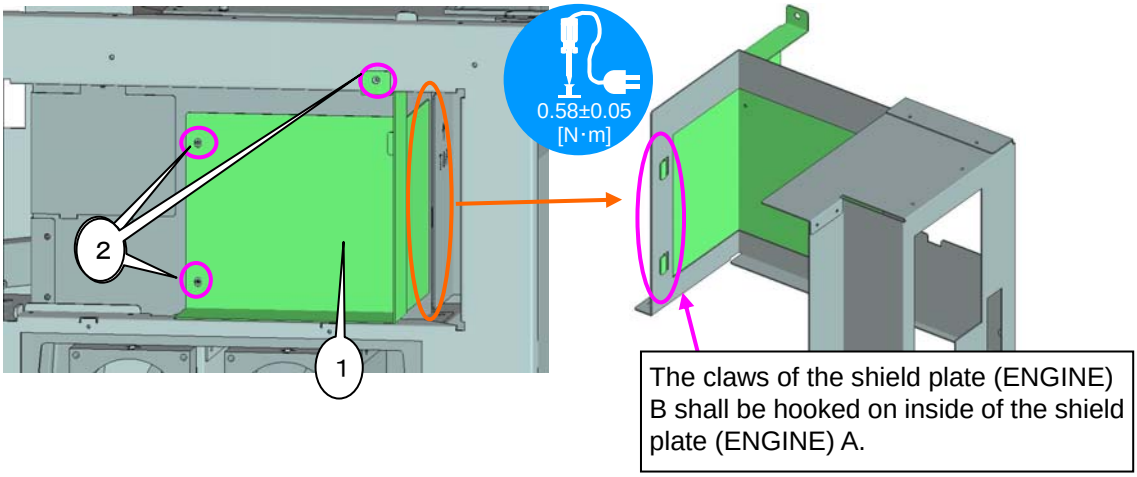

[2] Assemble the Fixing bracket (3D CON) and Plate (HIDE 3D CON), and mount them to the Set Assy.

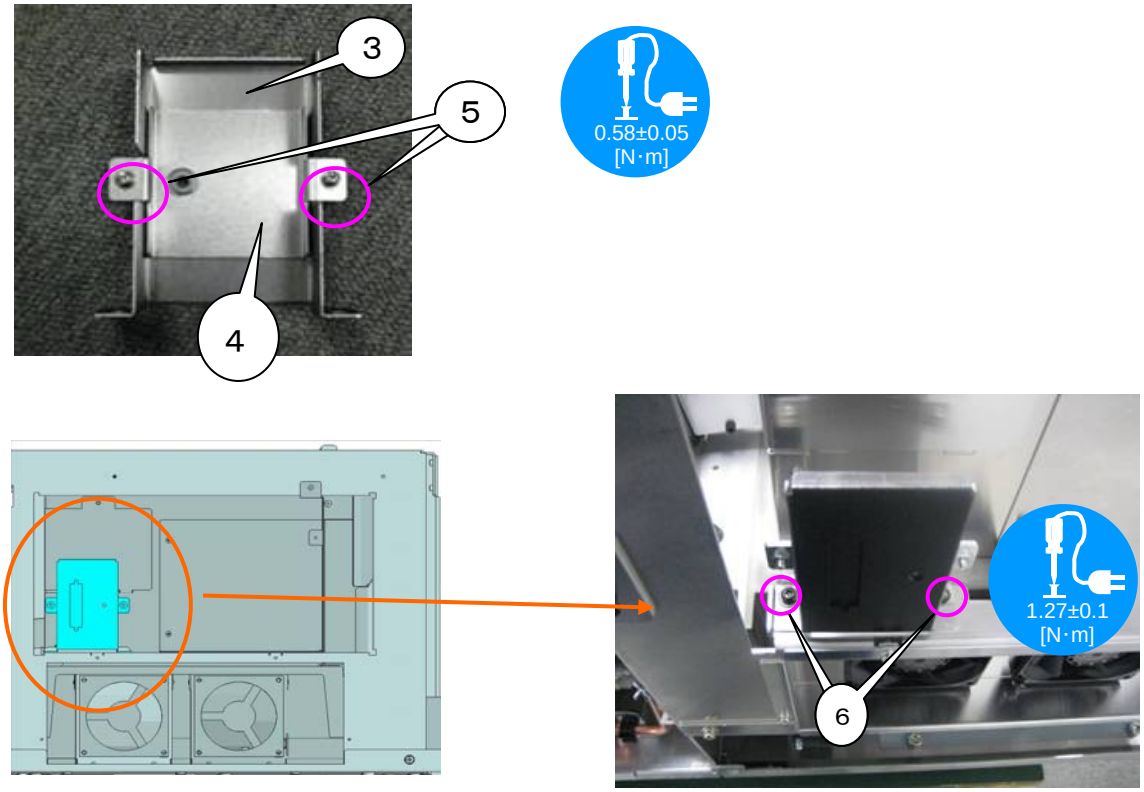

68. SET ASSY

	Diagram symbol	Circuit symbol	Part name	Part number	Q'ty	Remarks
	①		FIXING BRACKET(LAMP FAN PWB)	24H67691	1	
	②		BLHD50K-K6	7N970083	2	
	③	S60018	PL-CPIMS*3*8*3GF	24V00111	4	Torque management
	④		WIRE SADDLE(C)	16287421	1	
	⑤		FIXING BRACKET(LAMP FAN)A	24H67671	2	
	⑥		CUSHION	24C09141	8	
	⑦		PL-CPIMS*3*15	24V00251	8	Torque management
	⑧		COLLAR	24C09171	8	
	⑨		EDGE SADDLE	24C04371	2	

[1] Mount the BLHD50K-K6 and Wire saddle (C) to the Fixing bracket (lamp fan PWB).

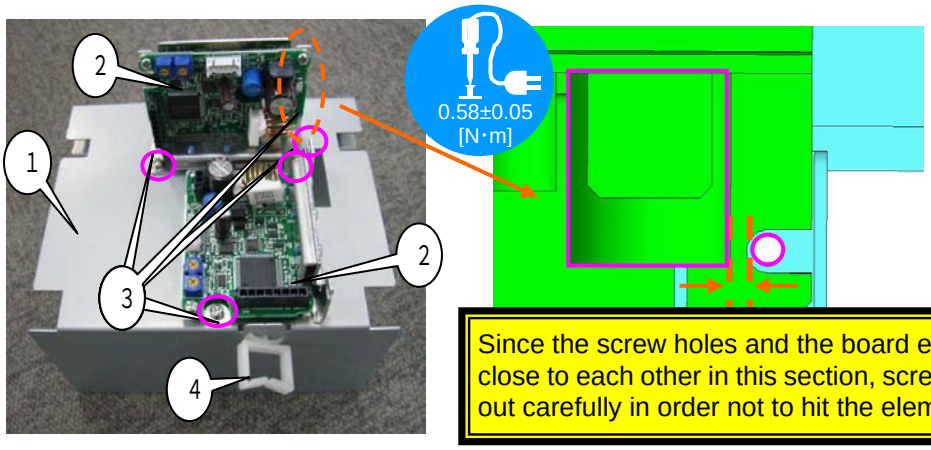

Since the screw holes and the board elements are allocated very close to each other in this section, screw fastening should be carried out carefully in order not to hit the elements with a screwdriver.

[2] Mount the cushion, collar and screw to the Fixing bracket (lamp fan) A. (2 sets)
Push to fix the cushion in the direction of the arrow.
Mount the Edge saddle (EDS1717U).

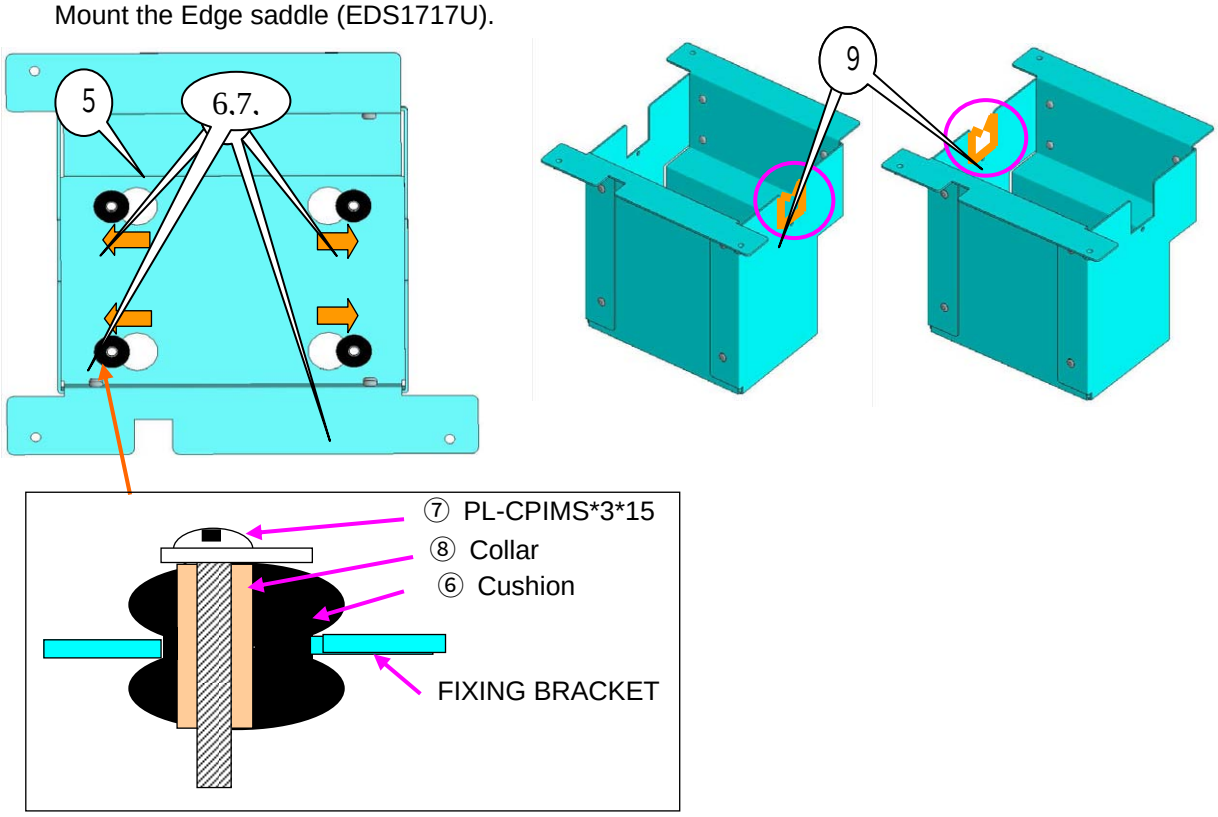

69. SET ASSY

	Diagram symbol	Circuit symbol	Part name	Part number	Q'ty	Remarks
	①		PL-CPIMS*4*10*3KF	24V00461	4	Torque management

[1] Install the fixing bracket (Lamp Fan PWB) first. Then, install the fixing bracket (Lamp Fan) A.
The fixing bracket (Lamp Fan) A should be installed so that its surface attached with an edge saddle is positioned on the BLHD50K-K6 side.
The fixing screws for the fixing bracket (Lamp Fan) A should be tightened in the order of numbers shown in the illustration below.

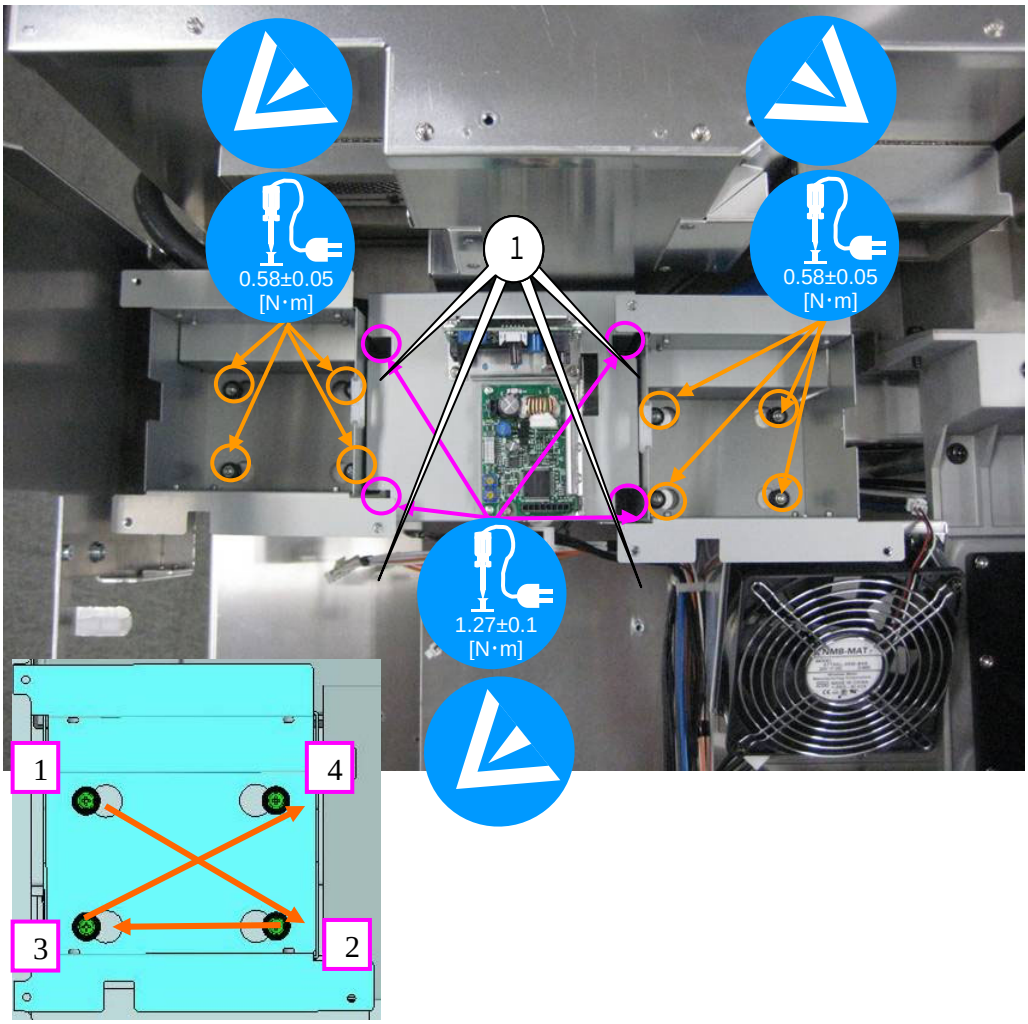

70. SET ASSY

	Diagram symbol	Circuit symbol	Part name	Part number	Q'ty	Remarks
	①		FIXING BRACKET(LAMP FAN)B	24H67681	2	
	②		DC FAN F0628-C12U	3N170150	2	
	③		PL-CPIMS*4*10*3KF	24V00461	6	Torque management
	④		PL-CPIMS*4*10*3KF	24V00461	6	Torque management

[1] Mount the Fixing bracket (lamp fan) B to the DC fan F0628-C12U. (2 sets)

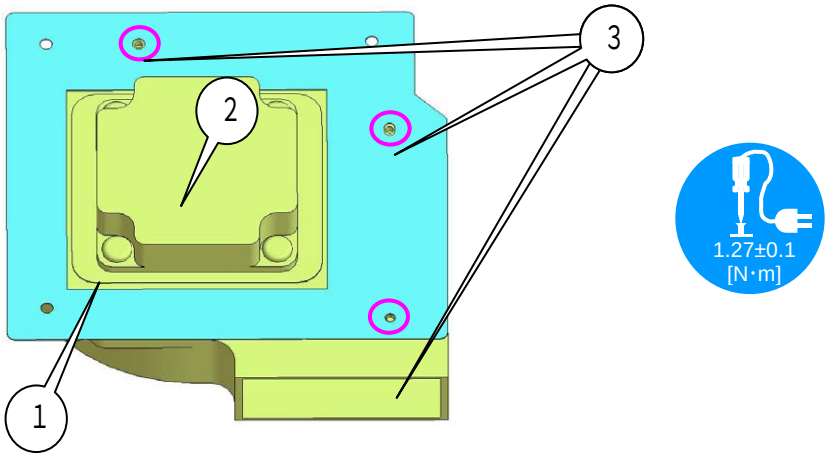

[2] Mount the Sassy, which has been assembled as per previous item, on the fixing bracket (Lamp Fan) A.
The fan cable shall be led out through the edge saddle.

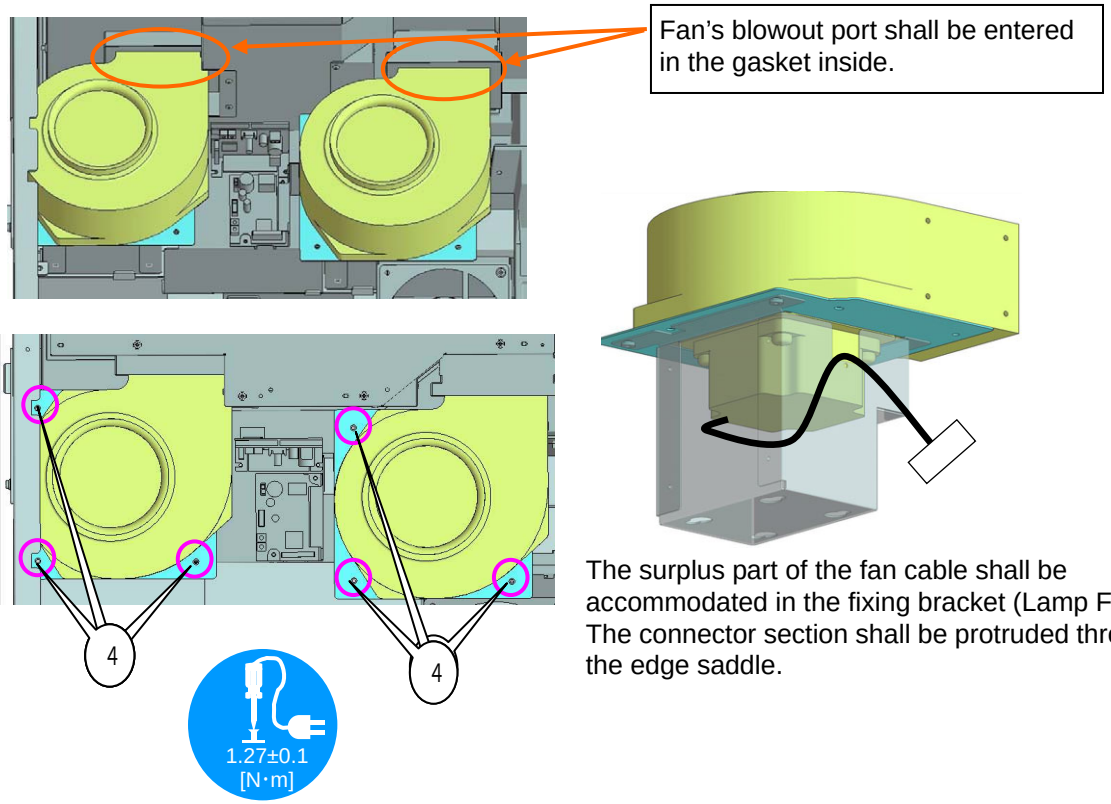

The surplus part of the fan cable shall be accommodated in the fixing bracket (Lamp Fan) A.
The connector section shall be protruded through the edge saddle.

71. SET ASSY

	Diagram symbol	Circuit symbol	Part name	Part number	Q'ty	Remarks

[1] Insert the Fan cable in the Fan driver PWB. (2 sets)

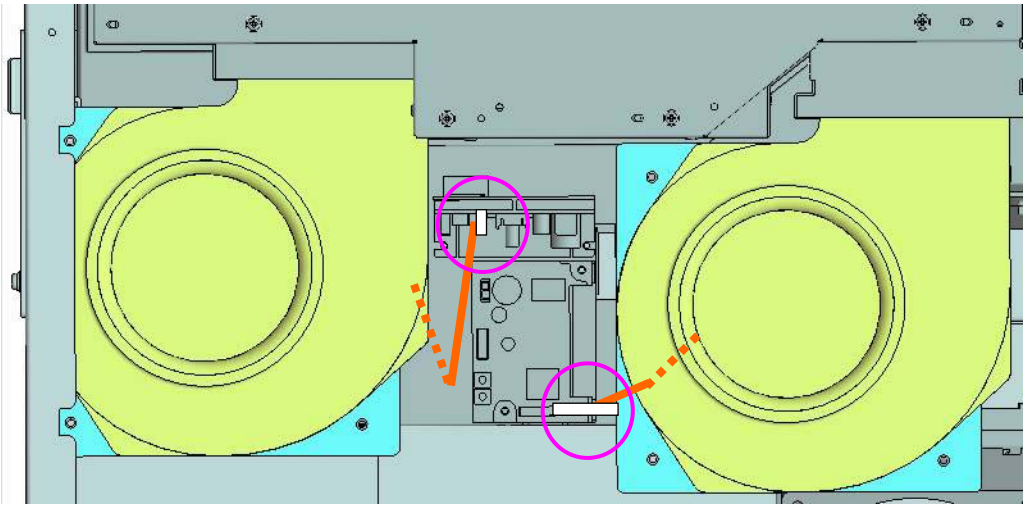

72. SET ASSY

	Diagram symbol	Circuit symbol	Part name	Part number	Q'ty	Remarks
	①		Bracket Z-Axis Adjust		1	Accessories of the lens mount
	②	S60036	HHCS*4*16*3KF	24V00451	1	
	③		Bracket Translate		1	Accessories of the lens mount

[1] Mount an adjusting screw on the Bracket Z-Axis Adjust and put it on the base engine.
When mounting the adjusting screw on the Bracket Z-Axis Adjust, adjust the tightening condition so that the screw head is entered in the hollow part of the base engine.

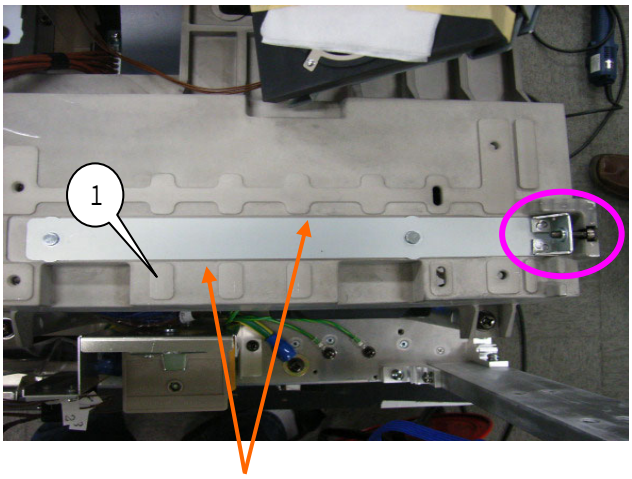

Pay attention to the screw head positions.

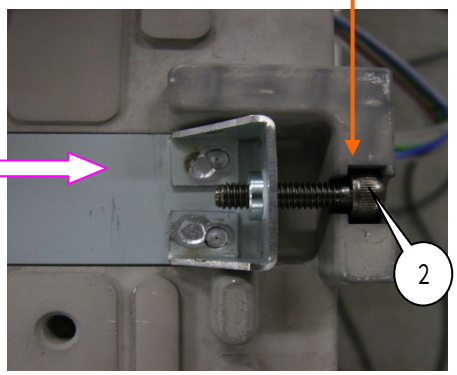

It shall be put in the groove of the base engine.

[2] Put the Bracket Translate on the Bracket Z-Axis Adjust.

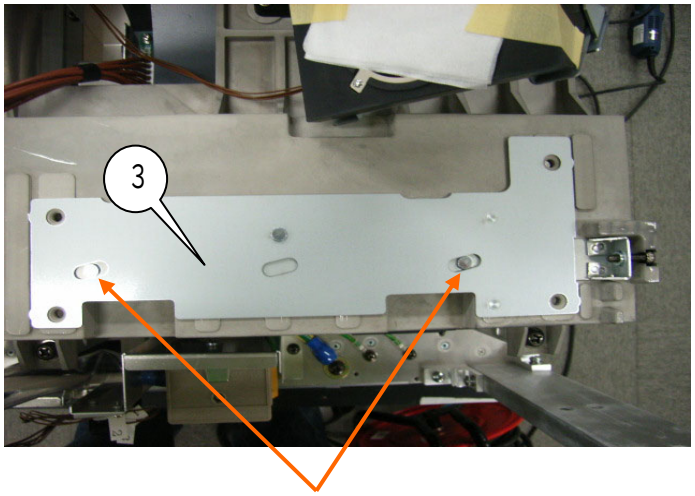

The pin of the Bracket Z-Axis Adjust shall coincide with the hole of the Bracket Translate.

73. SET ASSY

	Diagram symbol	Circuit symbol	Part name	Part number	Q'ty	Remarks
	①		HOLDINGPLATE(SCREW)	24H61161	1	
	②	S60033	PL-CPIMS*3*8*3GF	24V00111	2	Torque management
	③	K60034	LENS MOUNT(PA67)	24BS7796	1	
	④	S60035	SCR(SL-HHCS*5*16)	24N08451	4	Torque management

[1] Mount the Holding plate (screw).

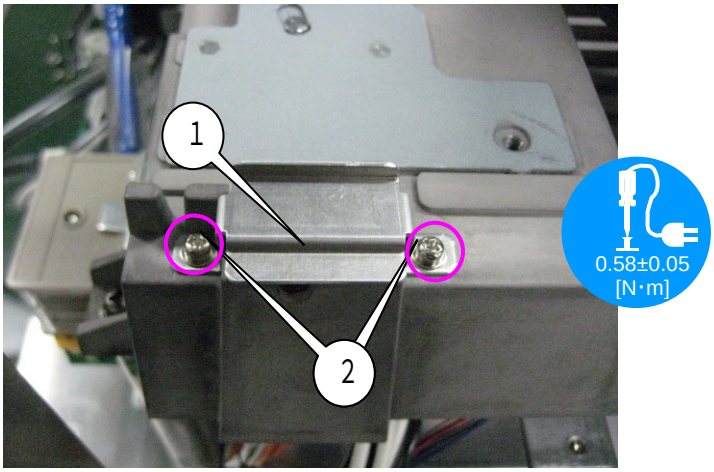

[2] Put the lens mount (PA67) on the Bracket Translate and fix it after adjusting the screw holes.
Temporary fastening is required here because regular tightening will be carried out in the adjusting process.

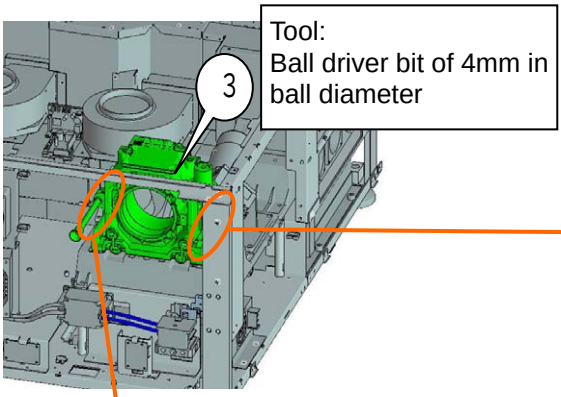

Tool:
Ball driver bit of 4mm in ball diameter

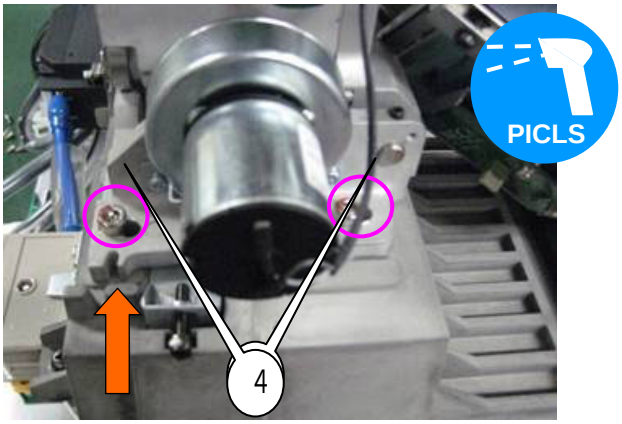

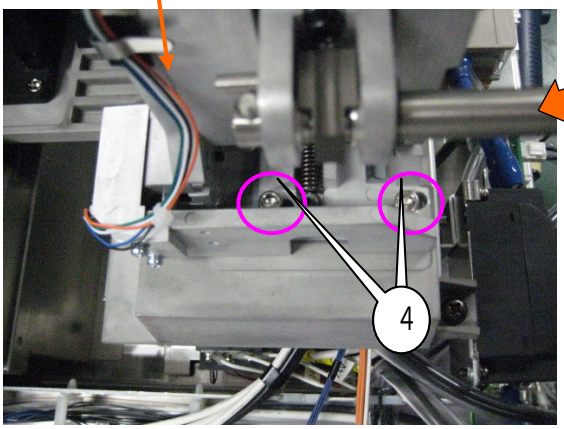

The screw position for the screw fastening of the lens mount is such that it is positioned in the mechanical center. (The screw holes of the lens mount are equally balanced on the right and left.)

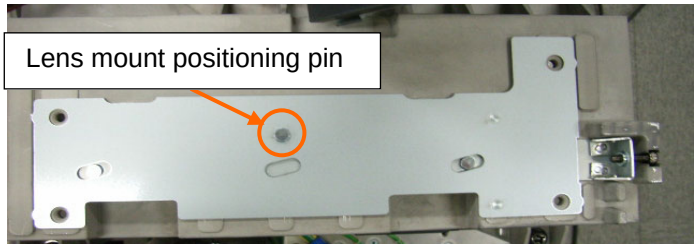

74. SET ASSY

	Diagram symbol	Circuit symbol	Part name	Part number	Q'ty	Remarks
	①		SHIELD PLATE(LENS)A	24H68341	1	
	②	S60027	CFIMS*3*6*3KF	24V00421	4	Torque management
	③	S60034	PL-CPIMS*3*15	24V00251	2	

[1] Mount the Shield plate (NC1600C) A to the lens mount (PA67).

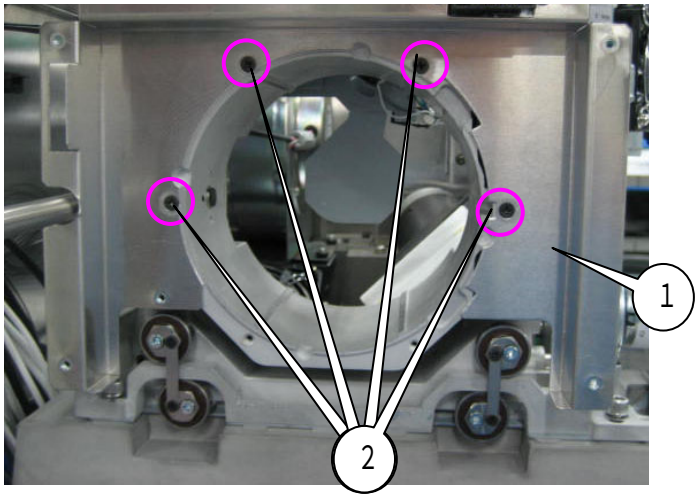

[2] Mount the connector section of the Lens mount (PA67) to the Shield plate (lens) A.

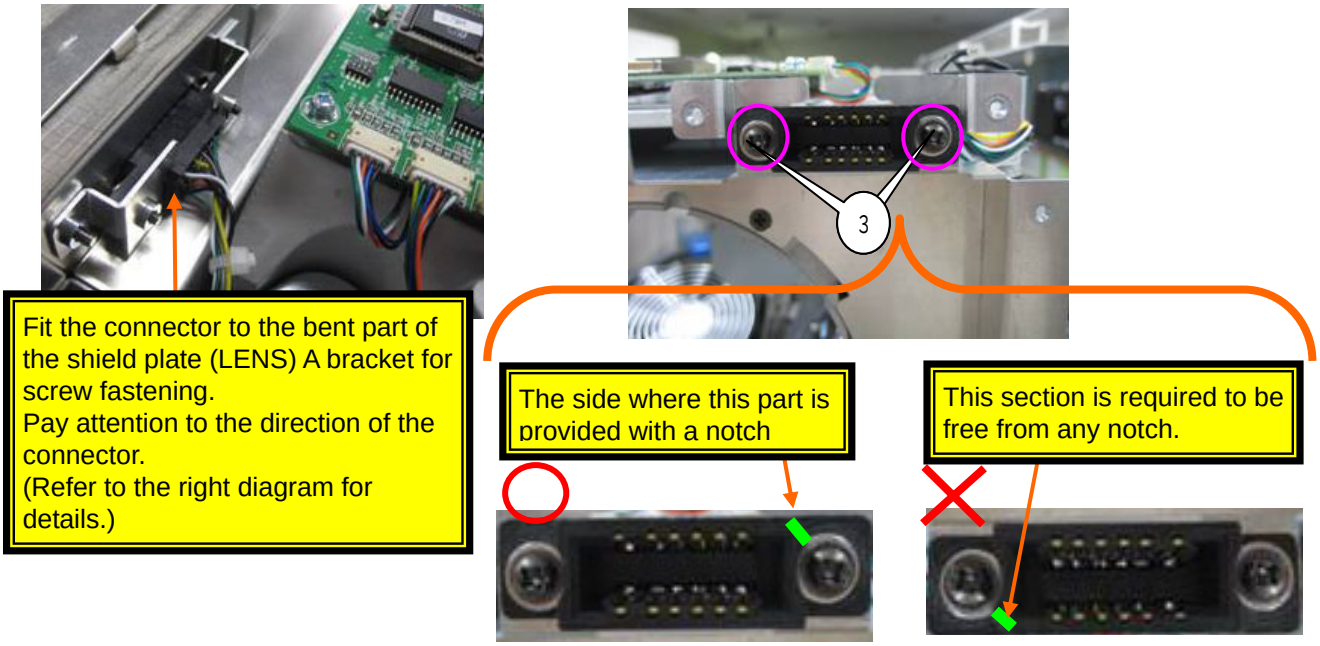

75. SET ASSY

	Diagram symbol	Circuit symbol	Part name	Part number	Q'ty	Remarks
	①		CASE(TI) SASSY		1	
	②	S60065	PL-CPIMS*4*10*3KF	24V00461	5	Torque management

[1] After wiring the CN(P24), CN(PSM) and CN(CN1-3) for the clamper, and mount the Case (TI) Sassy to the Set Assy.

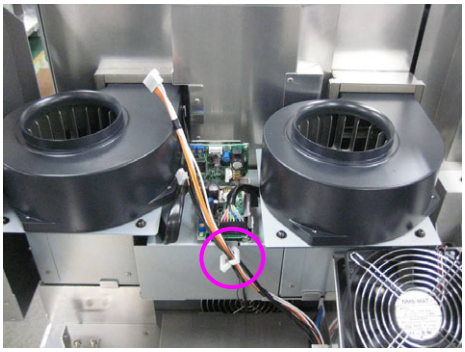

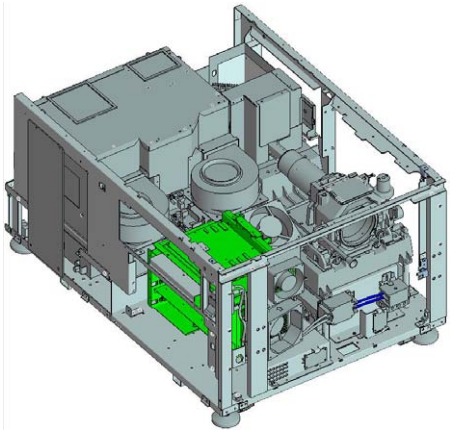

* When putting the case (TI) Sassy, pay attention not to pinch peripheral wires.

Top view

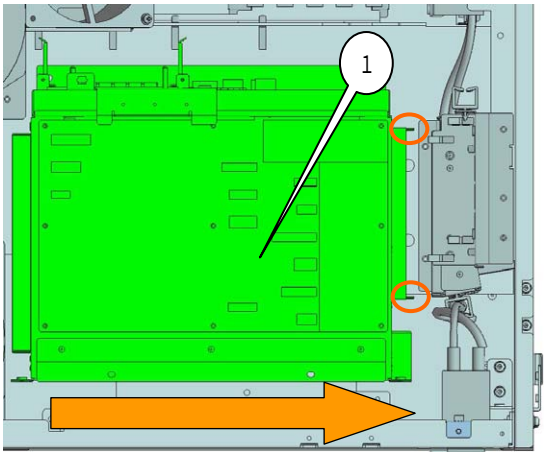

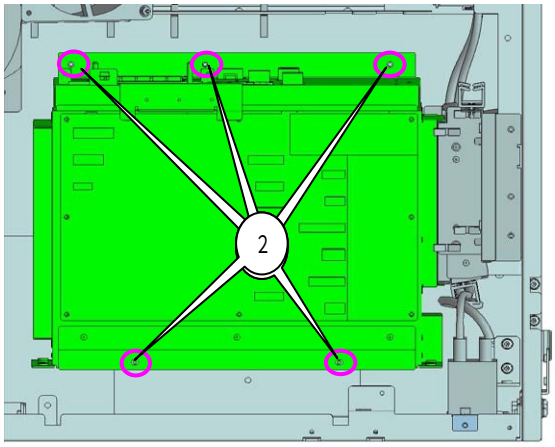

After the case (TI) Sassy has been put on the set, slide it to fit the duct (PWB FAN) Assy and adjust the screw holes.

76. SET ASSY

	Diagram symbol	Circuit symbol	Part name	Part number	Q'ty	Remarks
	①	LFP	CN4-WP(LFP)550W 1007-22	7NA4W001	1	
	②	CN7	CN40-WP(CN7)320X 1061-26	7NWLV004	1	
	③	K60083	CABLE CLIP(FCA-10)	24C02841	1	

[1] Insert CN(P24) and CN(PSM) to the DIV PWB, and CN(P12) to the Mother PWB.
For the CN (P12), cables shall be bundled with the front edge saddles.

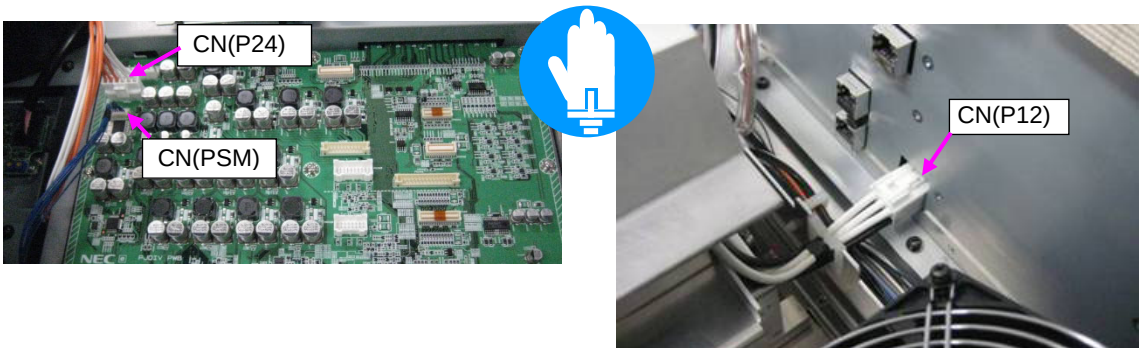

[2] Cabling shall be carried out by inserting the CN (CN7) and the CN (LPF) in the PJDIV PWB. When inserting a cable in the TAMPER PWB, hold the metallic plate to prevent it from being bent.
By that time, the lamp duct is not installed yet. Therefore, the F cable is left as it is.

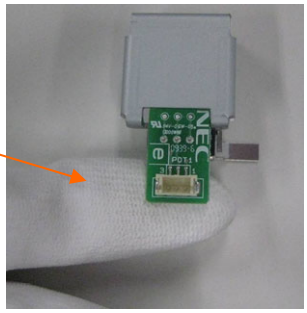

CN7
B: Upper left tamper (brown)
C: BLHD50K-K6 front (red)
D: BLHD50K-K6 rear (orange)
E: MM-box exhaust (yellow) [MM]
F: TSENS (lamp duct) (blue) [SLC]

LPF
FAN DRIVER PWB

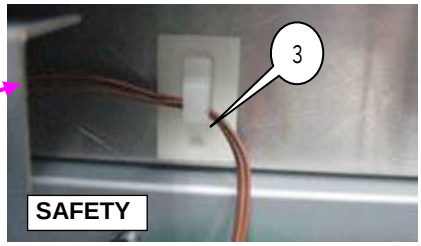

Secure the safety distance toward the power supply primary.

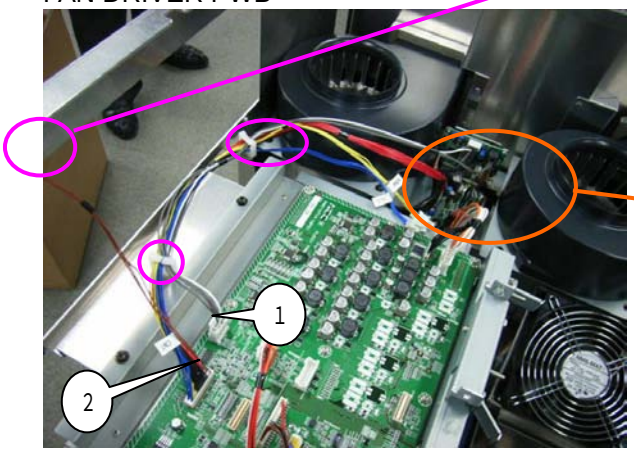

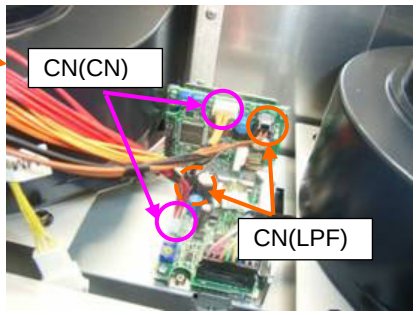

77. DUCT (TOP) SASSY

	Diagram symbol	Circuit symbol	Part name	Part number	Q'ty	Remarks
	①		DUCT(TOP) ASSY	24PS5892	1	
	②	K67002	CABLE CLIP(FCA-10)	24C02841	7	
	③		TEMP(LAMP) SASSY		1	
	④	S60048	PL-CPIMS*3*8*3GF	24V00111	2	Torque management

[1] Paste the Cable clip (FCA-10) to the duct (top) Assy.
The three A, B, and C of the diagram shall be stuck above the holes of the duct (TOP) Assy.
The yellow arrow indicates the direction of insertion for cable fastening.

Adhesion shall conform to the positioning of the upper edge of the duct and the circle center around the chimney.

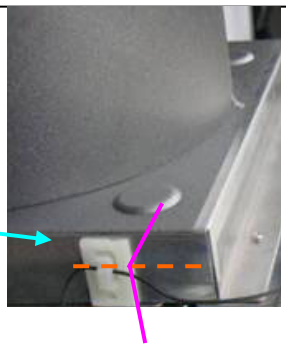

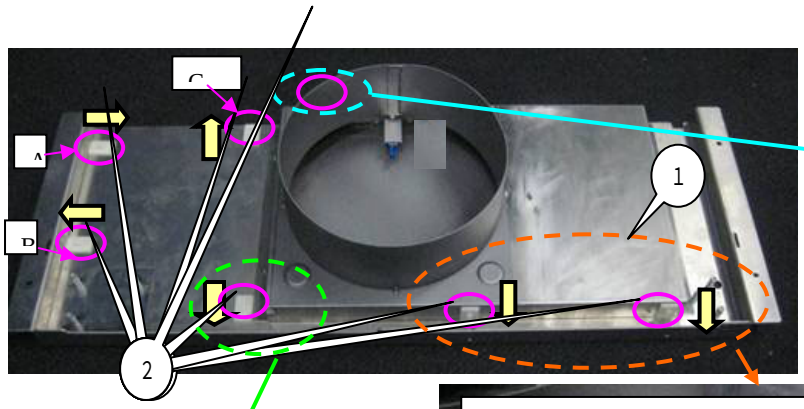

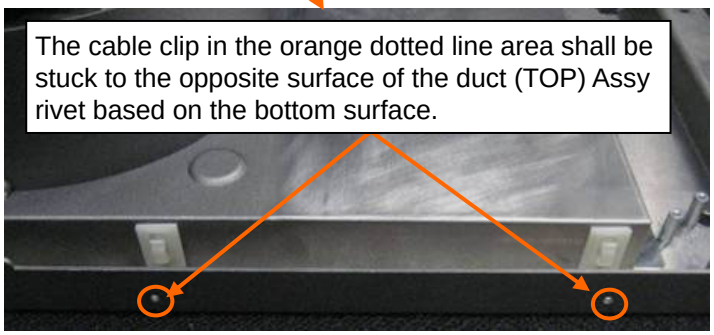

The cable clip in the orange dotted line area shall be stuck to the opposite surface of the duct (TOP) Assy rivet based on the bottom surface.

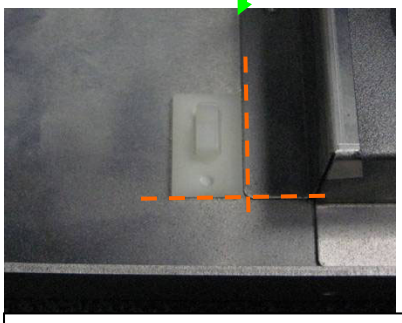

The cable clip in the green dotted line area shall be stuck according to the step of the duct (TOP).

[2] Mount the TEMP (lamp) Sassy to the Duct (top) Assy.

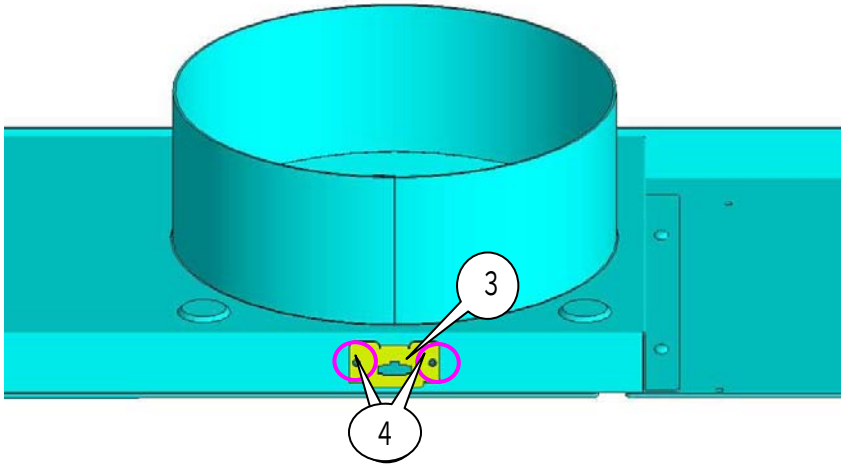

78. DUCT (TOP) SASSY

	Diagram symbol	Circuit symbol	Part name	Part number	Q'ty	Remarks
	①		SLED-B PWB ASSY	81T19ZG1	1	
	②		SLED-A PWB ASSY	81T19ZF1	1	
	③	ST	CN3P(ST)540W 3265-26	7NH3H003	1	
	④		PL-CPIMS*3*8*3GF	24V00111	6	Torque management, S67002,3

[1] Insert the CN(ST) in the SLED-B and SLED-A PWB, and mount the SLED-APWB and SLED-B PWB to the Duct (top) Assy.
After that, the CN (ST) shall be bundled in the position of the arrow mark in the diagram.

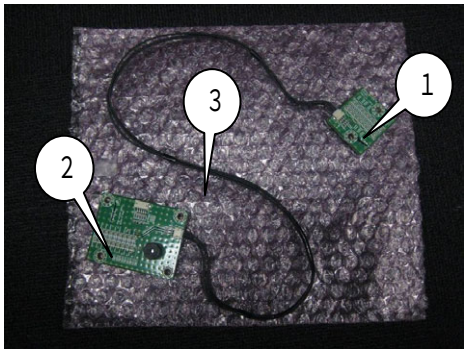

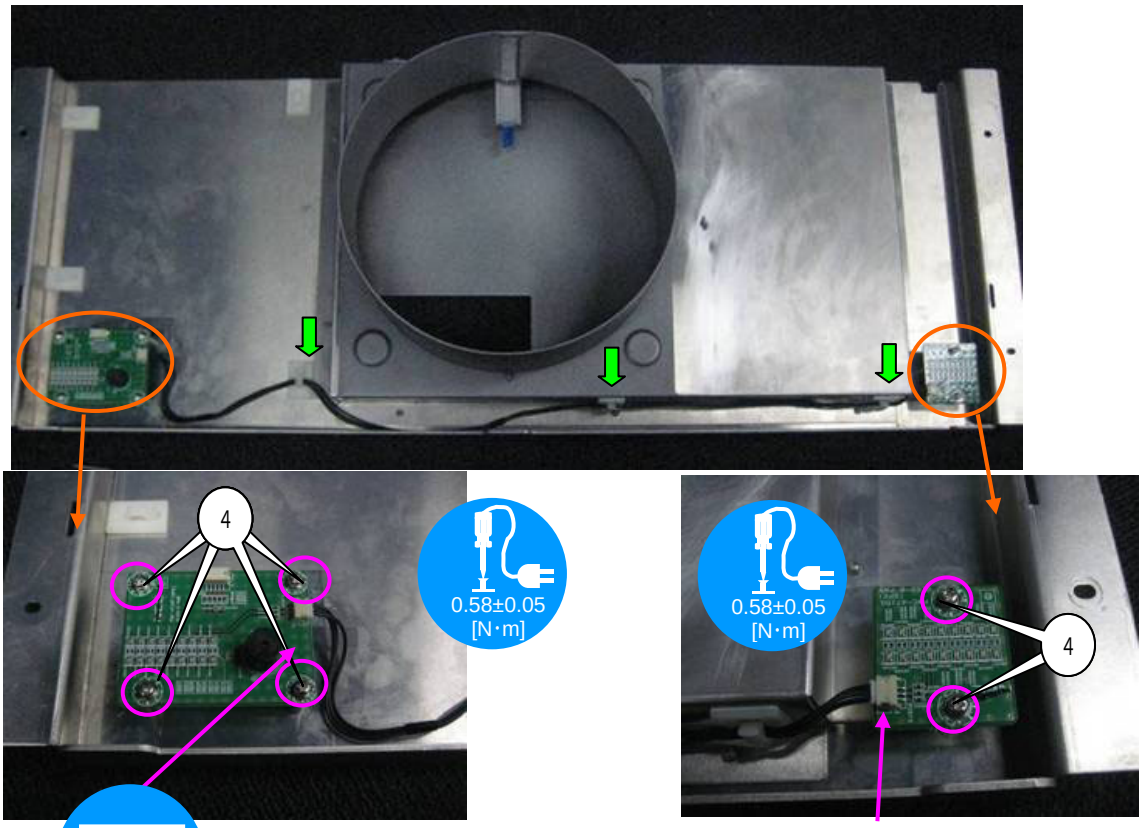

Install the connector so that it is faced to the chimney.

Peel the label off the buzzer top.

79. DUCT (LAMP FAN) SASSY

	Diagram symbol	Circuit symbol	Part name	Part number	Q'ty	Remarks
	①		DUCT(LAMP) ASSY	24HS4881	1	
	②		SHIELD PLATE(LAMP DUCT)	24H67801	1	
	③	S83002	PL-CPIMS*3*8*3GF	24V00111	2	Torque management
	④		TEMP SASSY		1	
	⑤	S60050	PL-CPIMS*3*8*3GF	24V00111	2	Torque management
	⑥	K83004	WIRE SADDLE (C)	162874211	1	

[1] Mount the Shield plate (lamp duct) to the Duct (lamp) Assy.

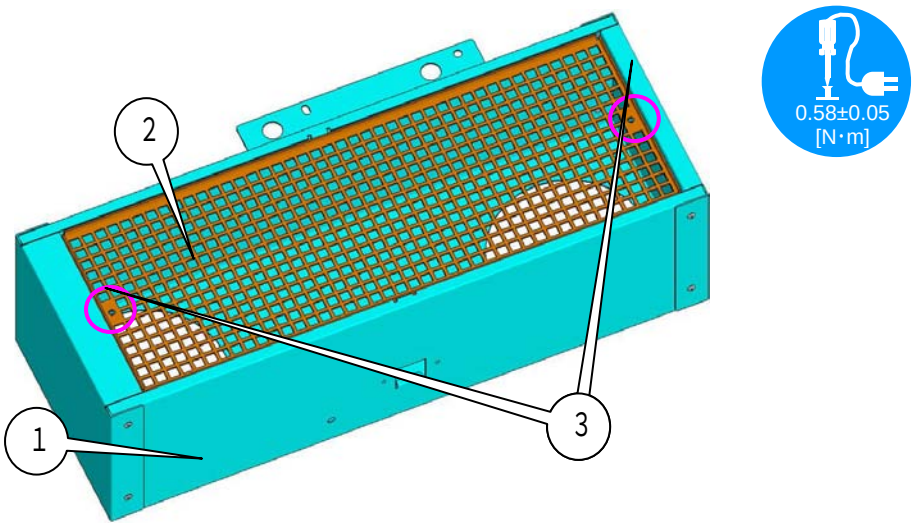

[2] Mount the TEMP Sassy and Wire saddle (C) to the Duct (lamp) Assy.

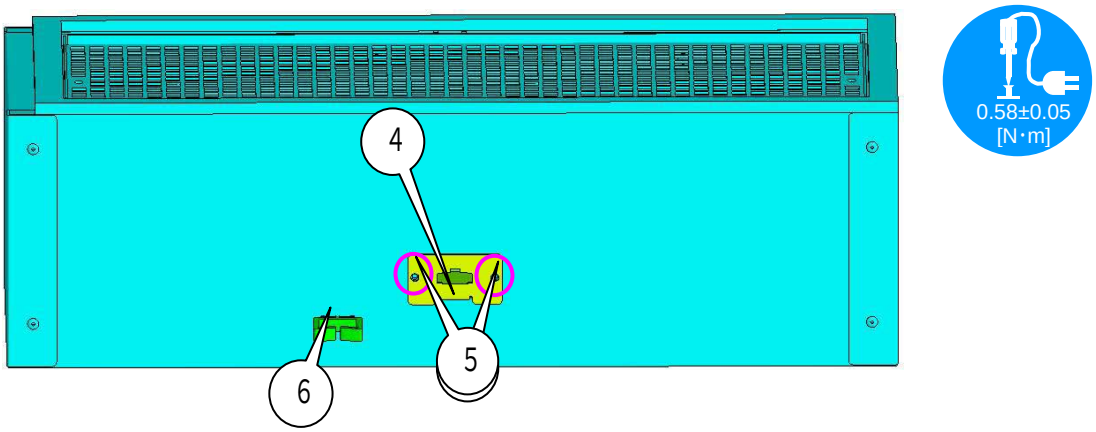

80. DUCT (LAMP FAN) SASSY

	Diagram symbol	Circuit symbol	Part name	Part number	Q'ty	Remarks
	①	K83002	CUSHION(T5)	24J37311	2	L=340mm*2,130mm*2 105mm*8 Tolerance of the above: ±5mm

[1] Paste the Cushion on the Duct (lamp) Assy.
For the fan contact plane, stick a cushion to cover the hole located around the duct port.
There shall be no clearance between cushions.

・Contact plane of the cover (TOP)

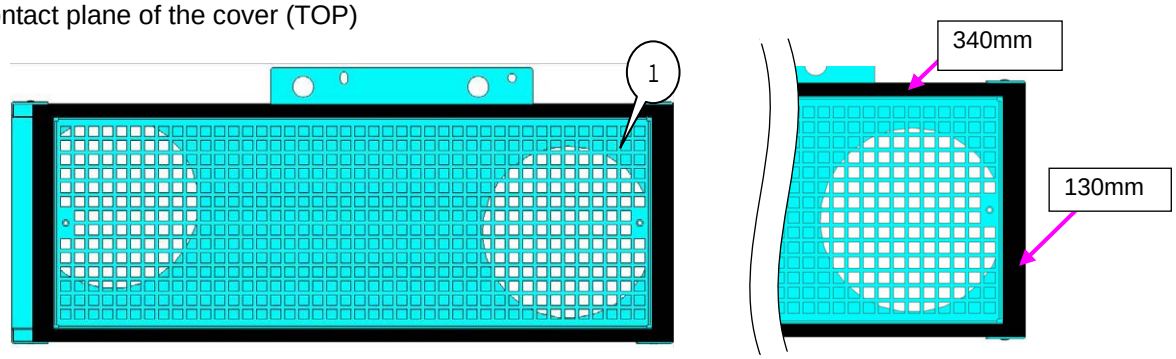

・Contact plane of the fan (Round hole size is the same on the right and left.)

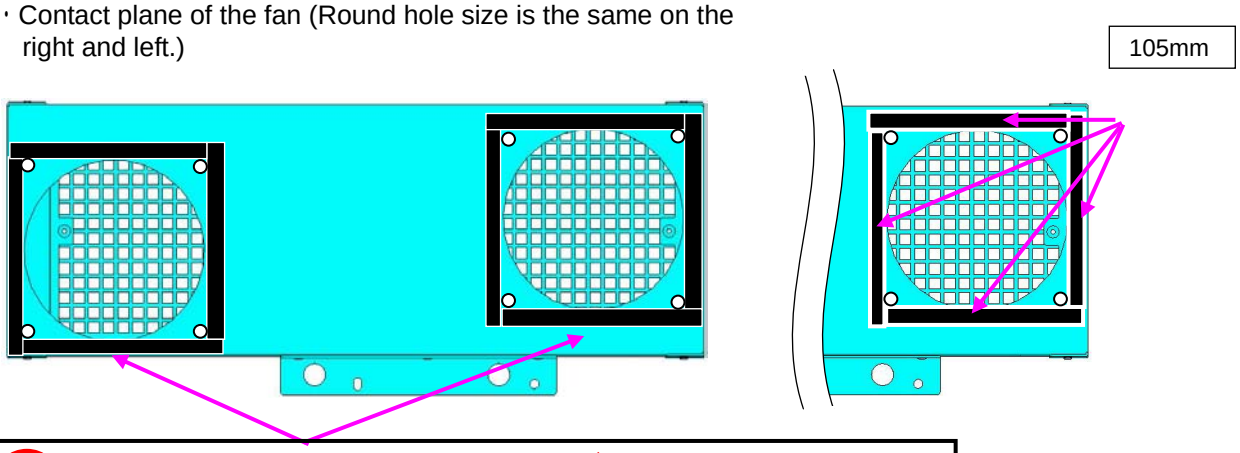

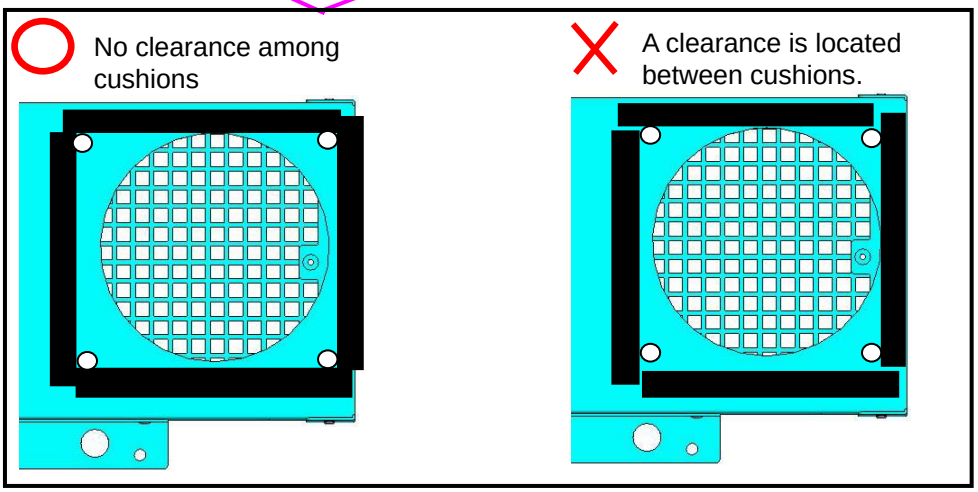

81. LCD_MODULE SASSY

	Diagram symbol	Circuit symbol	Part name	Part number	Q'ty	Remarks
	①	K54002	LCD MSC-C164DYLY-2N-E	7N970045	1	
	②	K54001	RE-H162TD-1190(LF)(SN)	7N400283	1	

[1] Insert the RE-H162TD-1190(LF)(SN) in the LCD module PWB.
Insert a shorter pin.

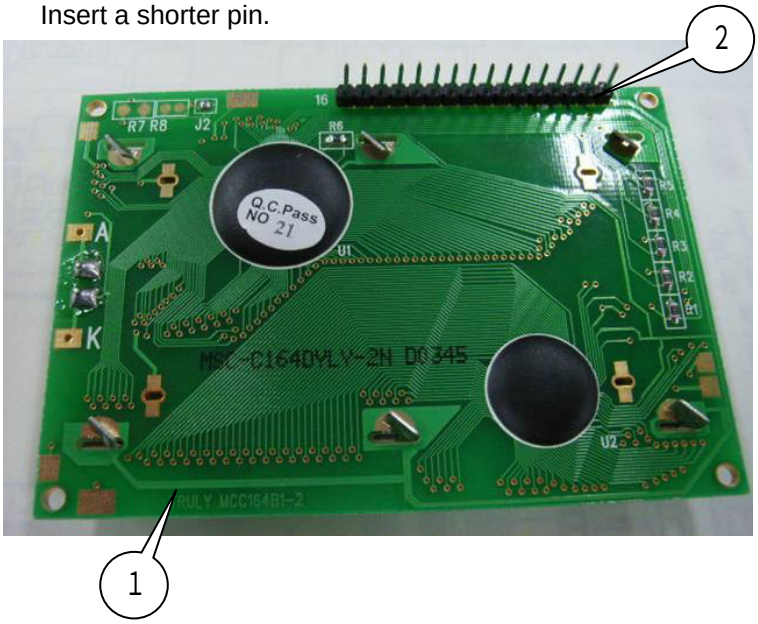

[2] Reverse the board and make soldering on the RE-H162TD-1190 (LF)(SN). (16 positions)
There shall be no clearing or tilting in the RE-H162TD-1190 (LF)(SN).
Peel the protection sheet off the display section.

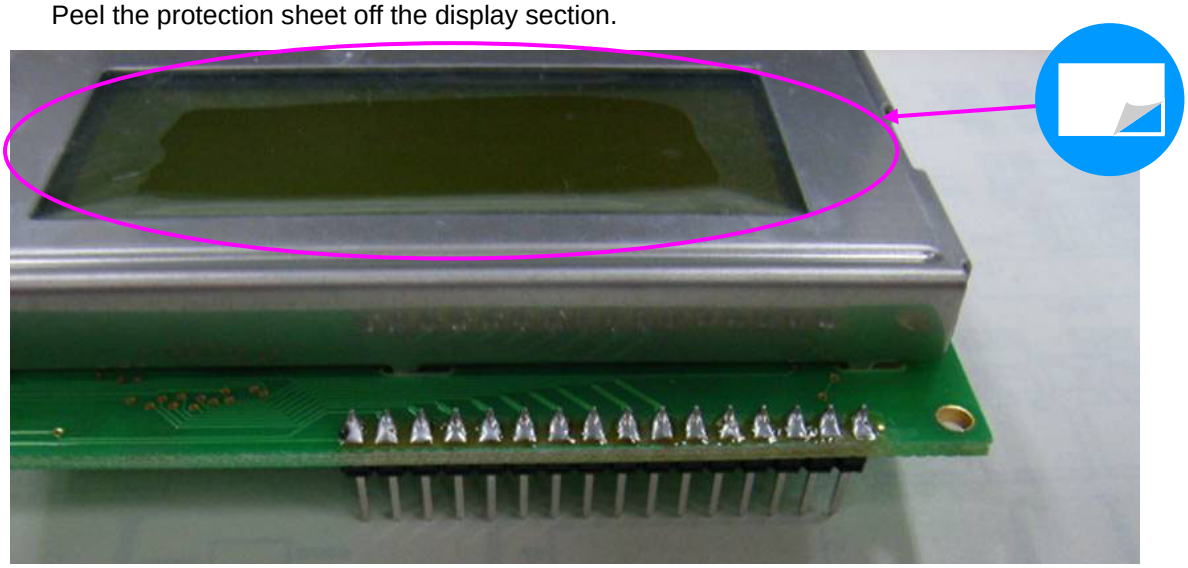

82. CTL UNIT SASSY

	Diagram symbol	Circuit symbol	Part name	Part number	Q'ty	Remarks
	①		FIXING BRACKET(CTL)	24H67721	1	
	②	K74005	CONTROL PANEL	7N970101	1	
	③	S74003	PL-CPIMS*3*8*3GF	24V00111	4	Torque management
	④		LCD_MODULE SASSY		1	
	⑤	K74001	WASHER(D8-2.5)	24J28631	4	
	⑥	S74004	CBIMS*2*6*3KF	24V00541	4	Torque management
	⑦		KEY-I/O PWB ASSY	81T19ZA1	1	
	⑧	S74001	PL-CPIMS*3*8*3GF	24V00111	4	Torque management

[1] Mount the Control panel to the Fixing bracket (CTL).

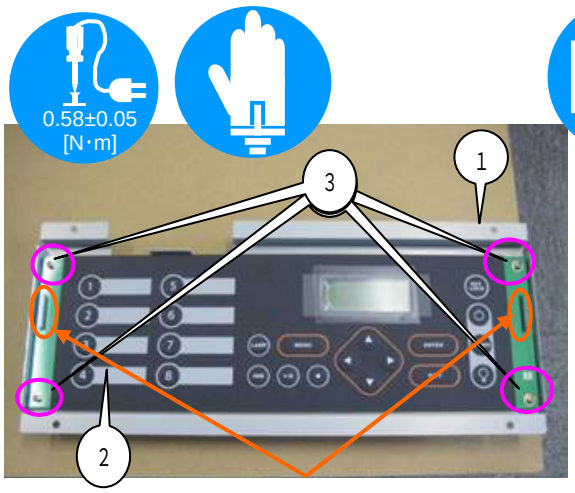

Insert the bracket claw in the panel slit for positioning.

Peel the protection sheet off the rear window section of the control panel.
Do not remove other protection sheets.

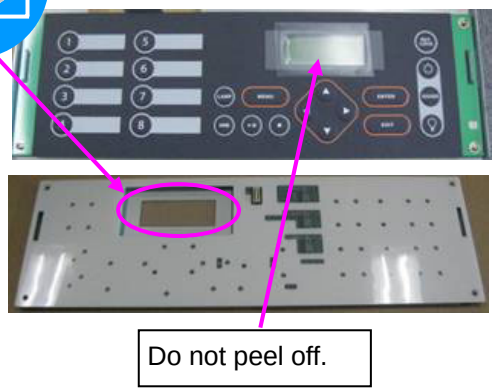

[2] Install the LCD Sassy and the KEY-IO PWB on the rear side of [1].

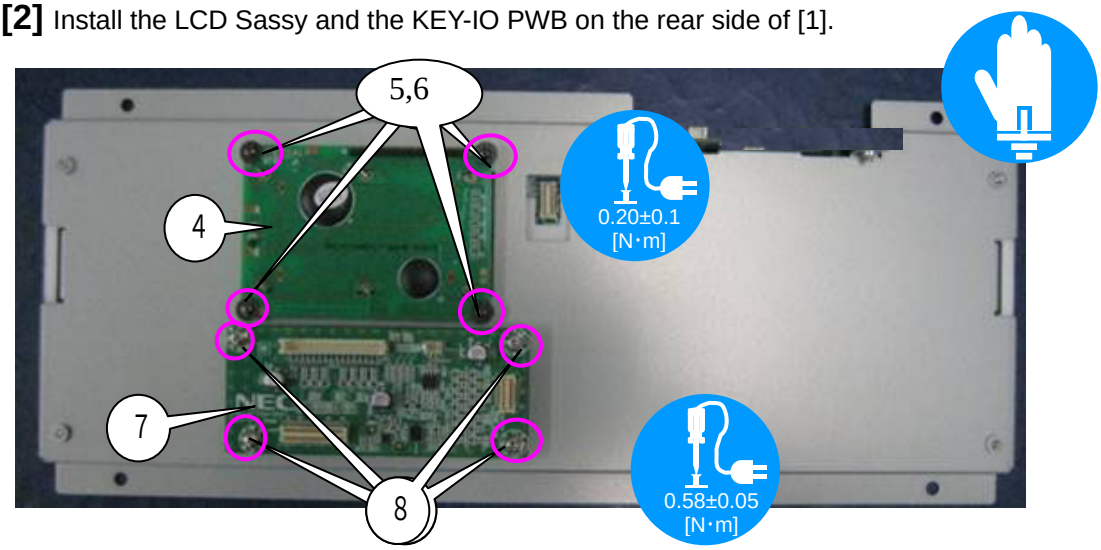

Cross-sectional diagrams ⑤ and ⑥

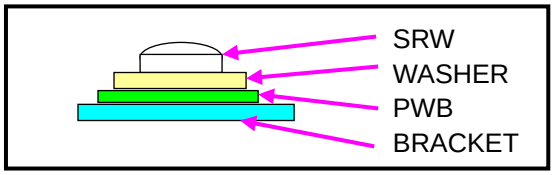

83. CTL UNIT SASSY

	Diagram symbol	Circuit symbol	Part name	Part number	Q'ty	Remarks
	①	LC	CN16（LC)100W,1061-24	7NFFW001	1	
	②	L1	CN2（L1)140W,1061-26	7NH2H002	1	
	③	1000	CN20P(1000)100W,1571-28	7NWLW056	1	
	④	IF	CN40P(IF)150W,1571-28	7NWLW055	1	

[1] Mount the CN(LC), CN(L1), CN(1000) and CN(IF) to the LCD PWB and KEY-IO PWB.

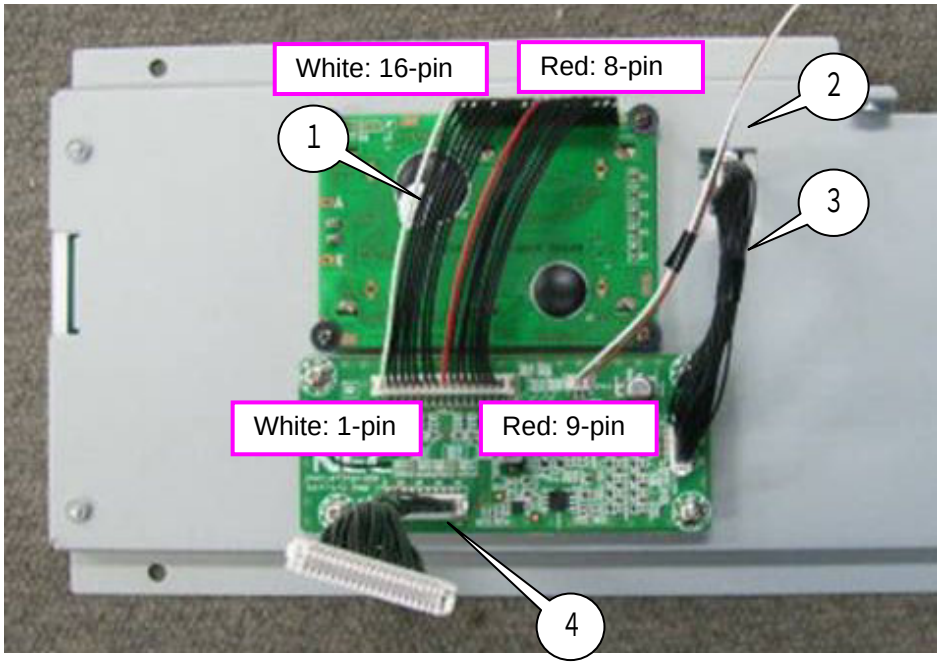

84. WATER UNIT (TANK) SASSY

	Diagram symbol	Circuit symbol	Part name	Part number	Q'ty	Remarks
	①		BASE(TANK)	24H68392	1	
	②		STRAP(1K-57)	24C08381	2	
	③		PC SUPPORT(H8)	12281531	5	
	④	K53001	WATER COOLED UNIT(16S2)	24BS7952	1	
	⑤	K53003	CUSHION SHEET(RADIATOR)A	24J35391	1	
	⑥	K53002	CUSHION SHEET(RADIATOR)B	24J35401	1	

[1] Mount the STRAP(1K-57) and PC SUPPORT(H8) to the Base (tank).

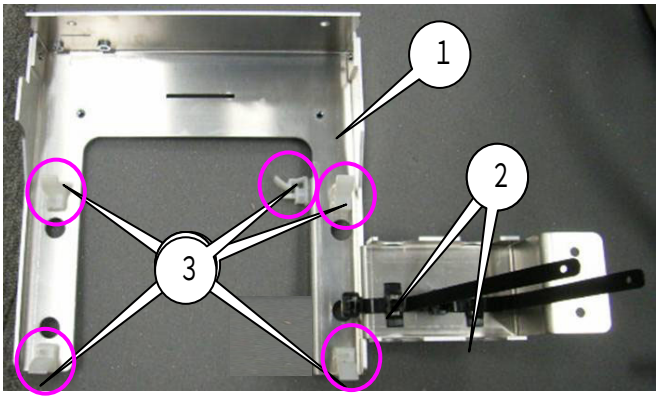

[2] Paste the Cushion sheet (radiator) on the radiator section of the Water cooled unit (16S2).

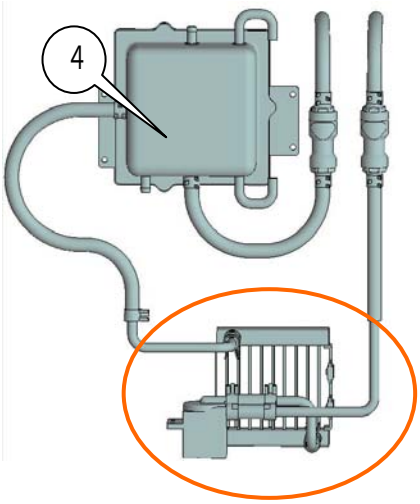

Tank section

Radiator section

Adhesion shall be carried out not to clog the screw holes.

Stick the cushion sheet (Radiator) A from the top left as seen from the front.

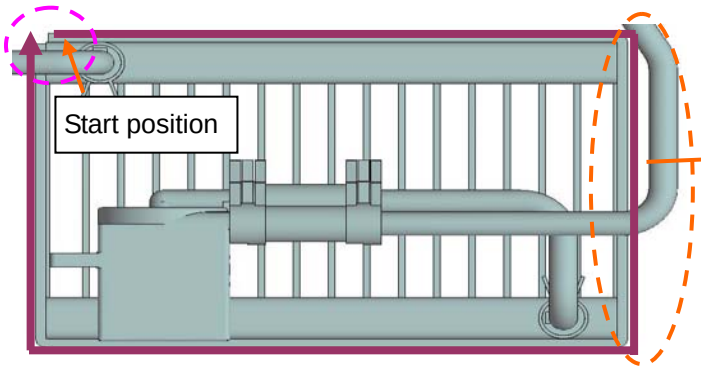

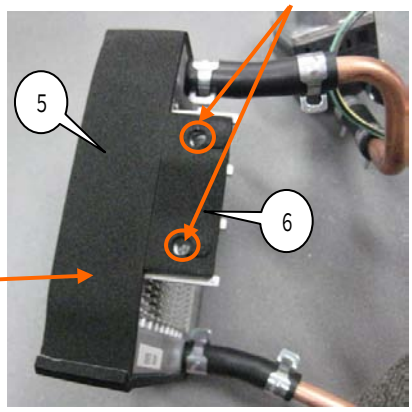

85. WATER UNIT (TANK) SASSY

	Diagram symbol	Circuit symbol	Part name	Part number	Q'ty	Remarks
	①		BASE(RADIATOR)20	24H68431	1	
	②	K53006	HOLDER(0828)	24C08371	2	
	③	S53010	SPECIALSCREW(PPS M4*10)	24N07701	2	Torque management
	④	K60085	GLUE,SCREW LOCK	92201082		Amount used = approx. 0.02g×2 points
	⑤	S53011	PL-CPIMS*4*10*3KF	24V00461	1	Torque management
	⑥		TEMP SASSY		1	
	⑦	S60050	PL-CPIMS*3*8*3GF	24V00111	2	Torque management

[1] Mount the HOLDER (0828) to the BASE (RADIATOR) 20, and mount it to the radiator section. When mounting the radiator, fit the holder with the copper tube first. Then, tighten the screws. After mounting the radiator, fix it with GLUE SCREW LOCK.

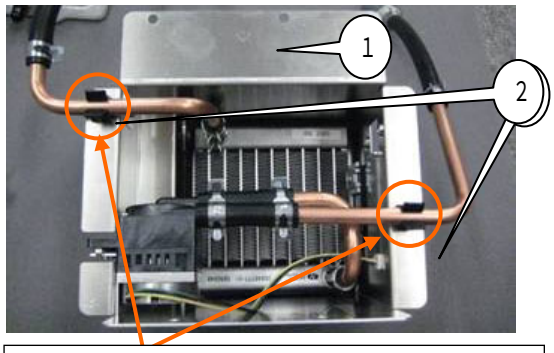

Fit the clamper with a tube.

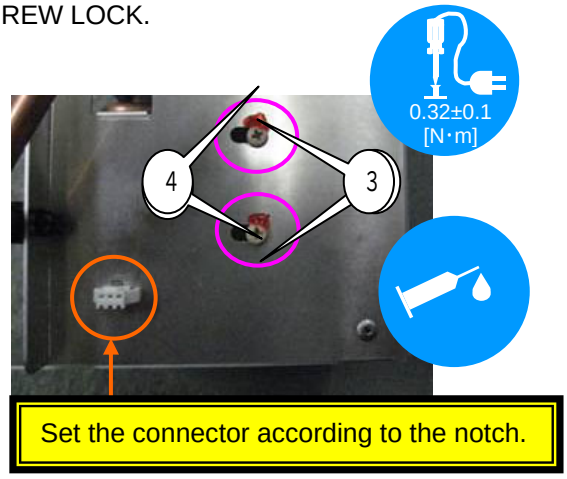

Set the connector according to the notch.

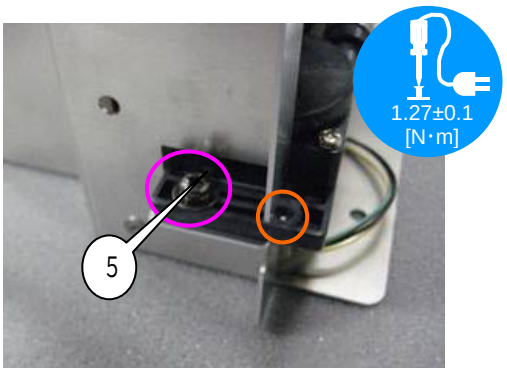

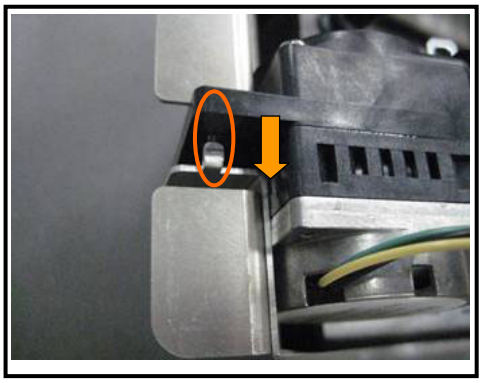

[2] Mount the TENS A Sassy to the Base (radiator) 20.

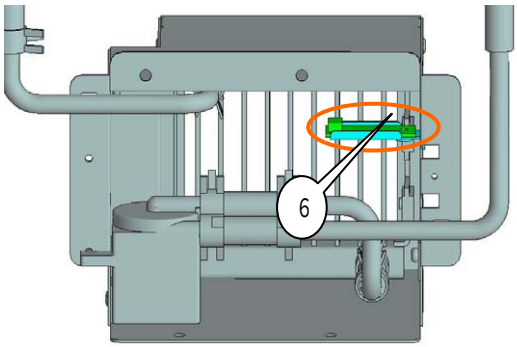

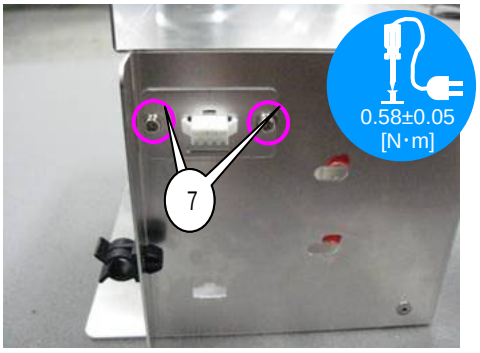

86. WATER UNIT (TANK) SASSY

	Diagram symbol	Circuit symbol	Part name	Part number	Q'ty	Remarks
	①		HOLDER(TANK)	24H68381	1	
	②	S53002	PL-CPIMS*4*10*3KF	24V00461	4	Torque management
	③	K42003	CABLE CLIP(FCA-10)	24C02841	1	

[1] Stick the cable clip to the pump side.
According to the inner fin edge, stick it in between the clampers of the tube.
The arrow mark indicates the direction of cable insertion.

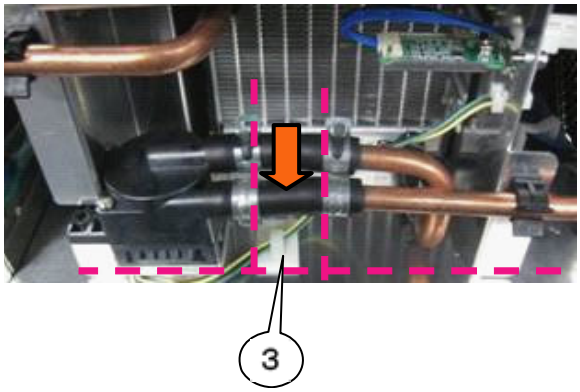

The arrow mark in the diagram below indicates the direction of cable fastening.

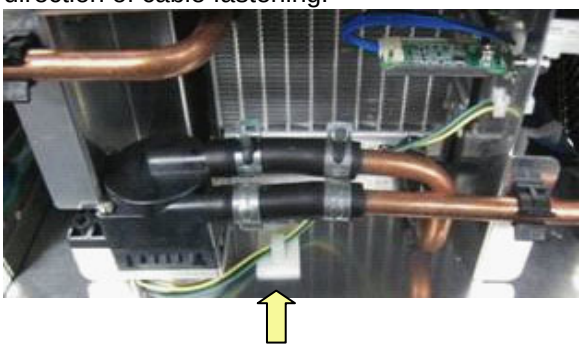

[2] Mount the Holder (tank) on the tank section of the Water cooled unit (16S2).

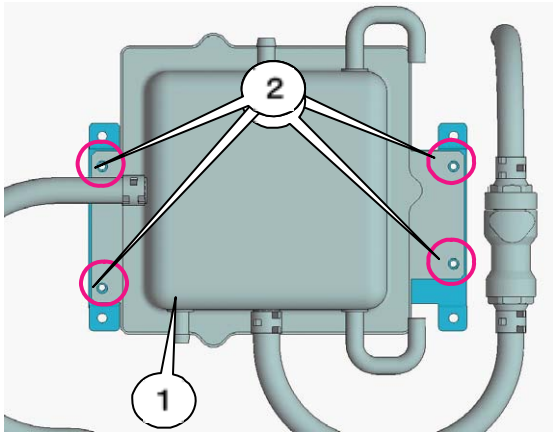

[3] Mount the Base (tank) on the tank section of the Water cooled unit (16S2).
Set the holder (TANK) in the PC support (H8) for mounting.

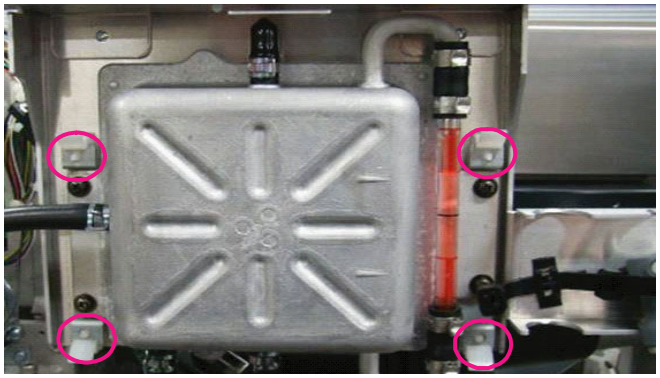

87. WATER UNIT (DMD) SASSY

	Diagram symbol	Circuit symbol	Part name	Part number	Q'ty	Remarks
	①		BRACKET(THERMAL)	24H65581	1	
	②	K52001	SHEET(SERMAL)	24J34891	1	
	③		TSENS-A PWB ASSY | TSENS-H PWB ASSY	81T19ZAA | 81T19ZAH	1	TSENS PWB
	④	S52003	SCR(PPS M3*6)	24N08791	1	Torque management
	⑤	K60085	GLUE,SCREW LOCK	92201082		Amount used = approx. 0.02g×1 point
		S52002	PL-CPIMS*3*8*3GF	24V00111	2	Torque management
	⑦		Liquid cooling jacket		1	24BS7951 accessories

[1] Stick the sheet (Thermal) to the top of the bracket (Thermal). (No clogging on screw holes)

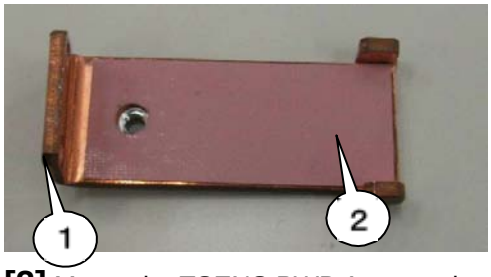

[2] Mount the TSENS PWB Assy on the Sheet (thermal).
Apply GLUE SCREW LOCK after mounting.

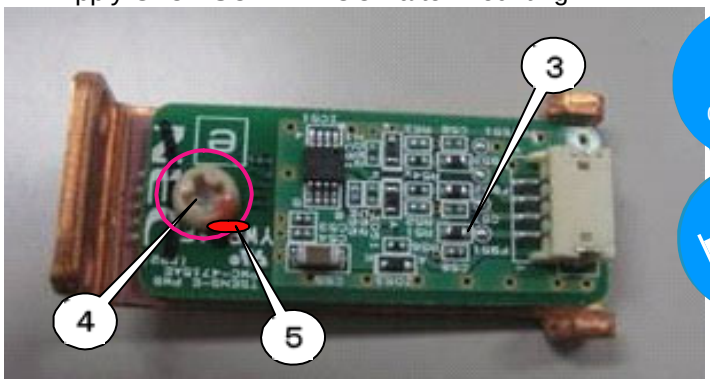

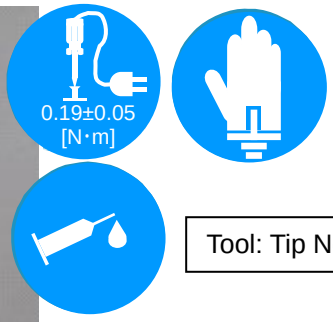

Tool: Tip No.2 driver bit

[3] Mount the Bracket (thermal) on the cooling jacket at the PWB side of the FSB-B.

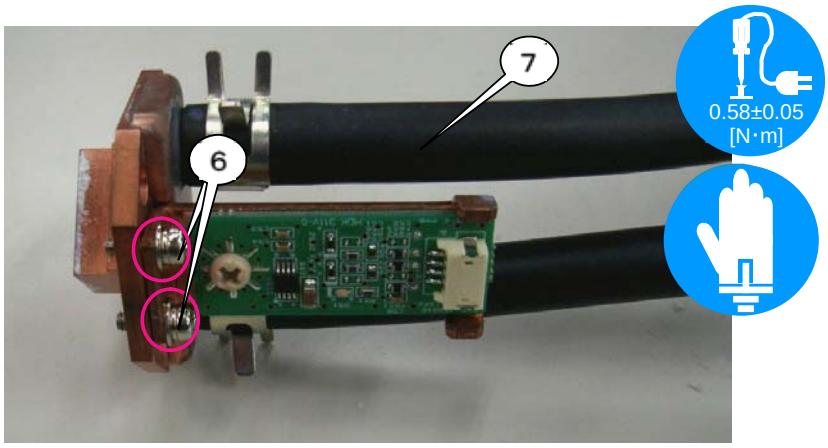

88. WATER UNIT (DMD) SASSY

	Diagram symbol	Circuit symbol	Part name	Part number	Q'ty	Remarks
	①	K13015	SILICON OIL CONPOUND G747	9R020001		Amount used = approx. 0.05g×3 points

[1] Apply a silicone oil compound G747 (200G) uniformly to the contact surfaces of the DMD of the liquid cooling jacket section.

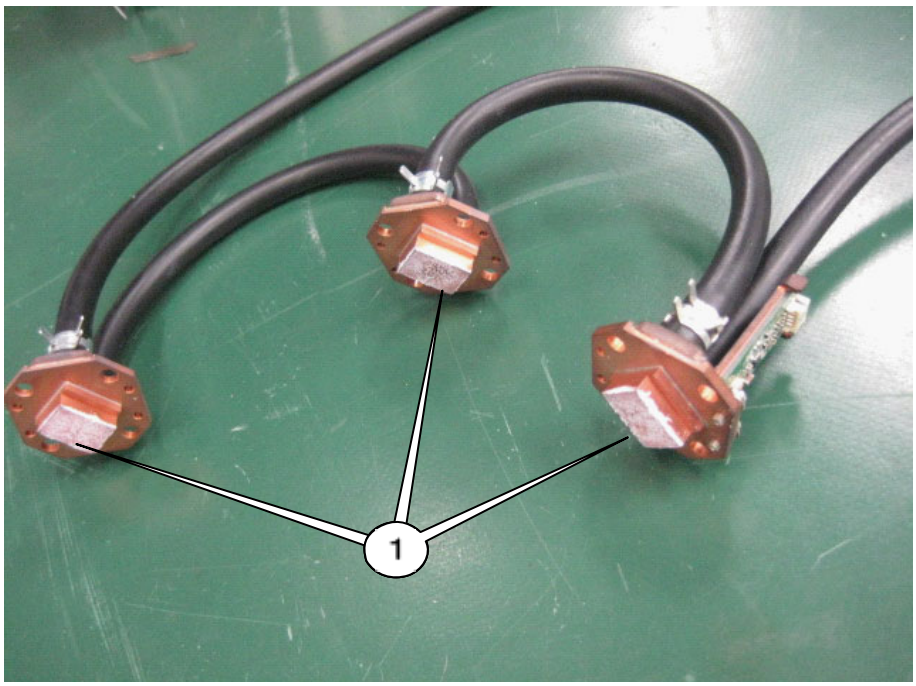

89. PRISM SASSY

	Diagram symbol	Circuit symbol	Part name	Part number	Q'ty	Remarks
	①	SF	CN30P(SF) 400W 1061-28	7NWLW057	3	
	②	SF1	CN30P(SF1) 400W 1061-28	7NWLW058	3	
	③		CONDUCTIVE CLOTH TAPE	9R030011	0.128	
	④		ACETATE CLOTH TAPE	9R030010	0.05	

[1] Join two of the CN (SF) and the CN (SF1) together and wind a conductive cloth tape around them. Wind an acetate cloth tape over the finished item.

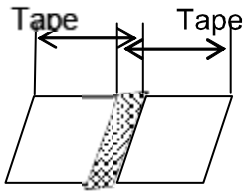

EMI

The amount of tape winding around the cable (SF/SF1) is more than 1/3 of the tape width.

Direction where the embossed part comes to the upper side

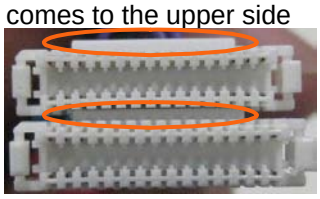

Wind the tape after the connector directions have been aligned.

Direction where the hollow part of the connector comes to face upwards

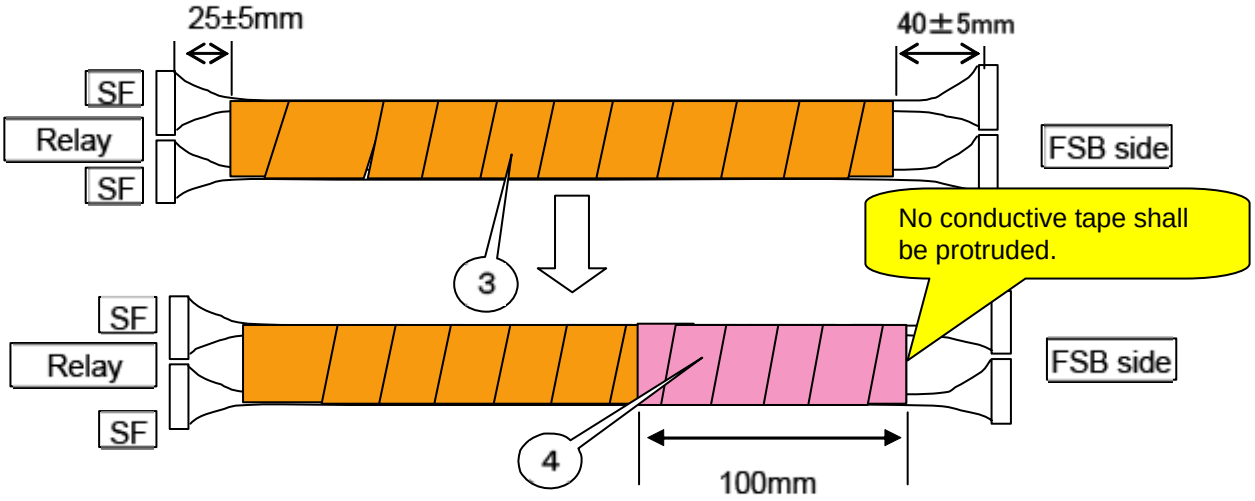

90. PRISM SASSY

	Diagram symbol	Circuit symbol	Part name	Part number	Q'ty	Remarks
	①		BRACKET(TI RELAY PWB)A	24H67391	1	
	②		INTERVENE PWB ASSY	81T19MB1	1	
	③	S13014	PL-CPIMS*3*8*3GF	24V00111	4	Torque management
	④		BRACKET(TI RELAY PWB)B	24H67401	1	
	⑤		BRACKET(TI RELAY PWB)C	24H67411	1	
	⑥	K13002	GASKET(STG6-10 L=100)	24C09961	2	
	⑦		SCREW,PL-CPIMS*3*8*3GF	24V00111	4	Torque management, S13002,3

[1] Mount the FSB relay PWB to the Bracket (TI relay PWB) A.

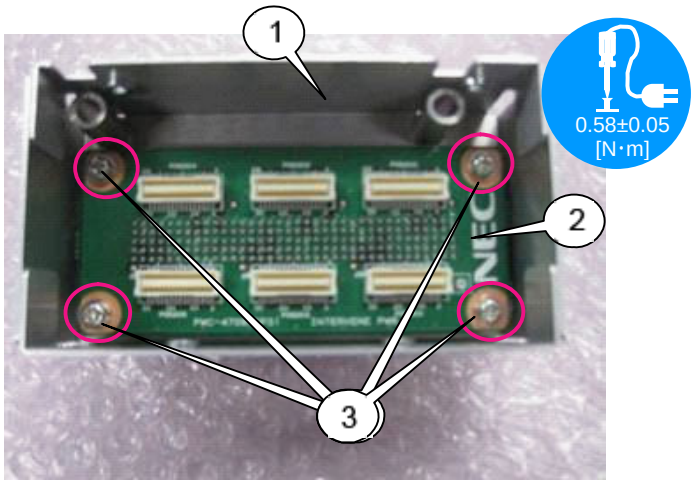

Install it where a purple round boss is present in the diagram below. The mounting direction should be R-J1, G-J1, and B-J1 from right to left.

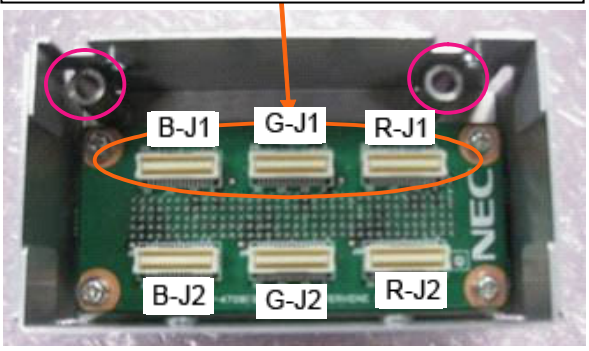

[2] Insert the cable on the previous page in the FSB relay PWB.
Mount the Bracket (TI relay PWB) B, C pasted the gasket.
At that time, nip the cable with a gasket.
Use a jig at the time of assembly.

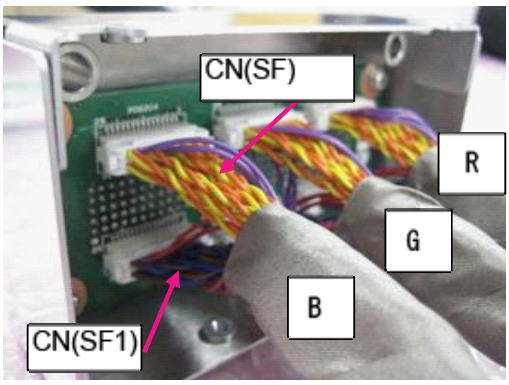

Insert it while the embossed part is faced upwards.

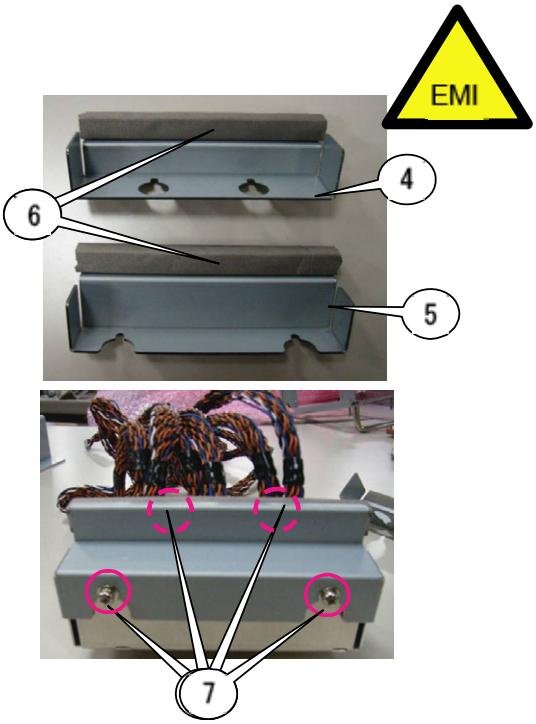

91. PRISM SASSY

	Diagram symbol	Circuit symbol	Part name	Part number	Q'ty	Remarks
	①	K13012	BRACKET(GUIDE)L	24H68241	1	
	②	K13011	BRACKET(GUIDE)R	24H68251	1	
	③	K13013	ROLLER(TM-86-A-1)	24C09721	4	Torque management
	④	S13010	PIWA*6*3KF	24V00871	4	
	⑤		SLIDE PLATE	24H68231	1	
	⑥		PL-CPIMS*4*8*3GF	24V00591	4	Torque management, S13008,9

[1] Mount the Roller (TM-86-A-1) and PIWA*6*3KF to the bracket (guide) L and bracket (guide) R.
Remove the screws that are attached to the roller. Tighten it together with the roller and the PIWA.

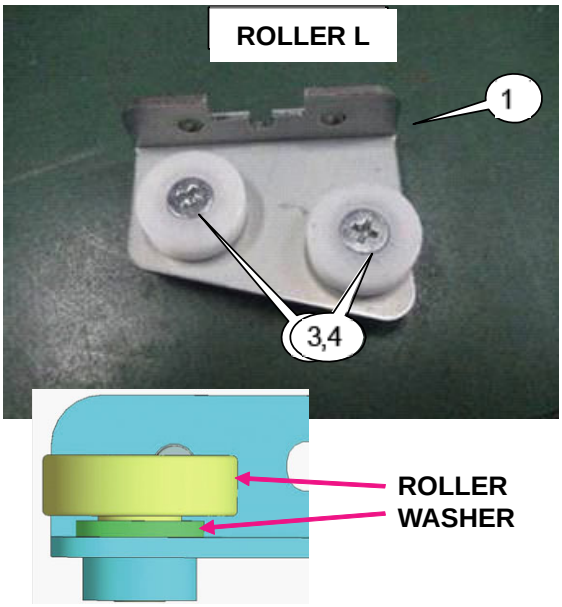

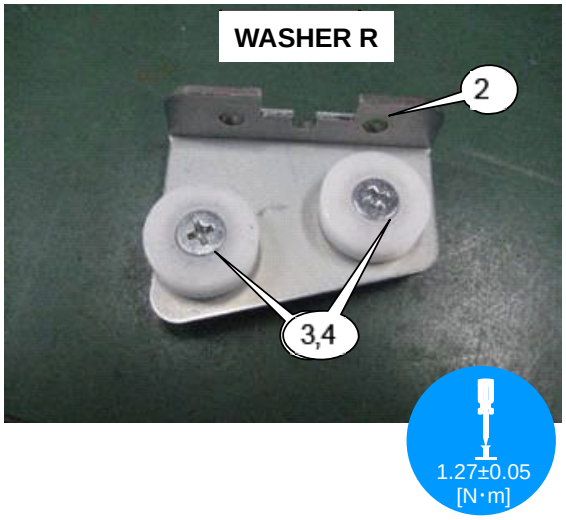

[2] Mount the Roller assembled in the previous step to the Slide plate.

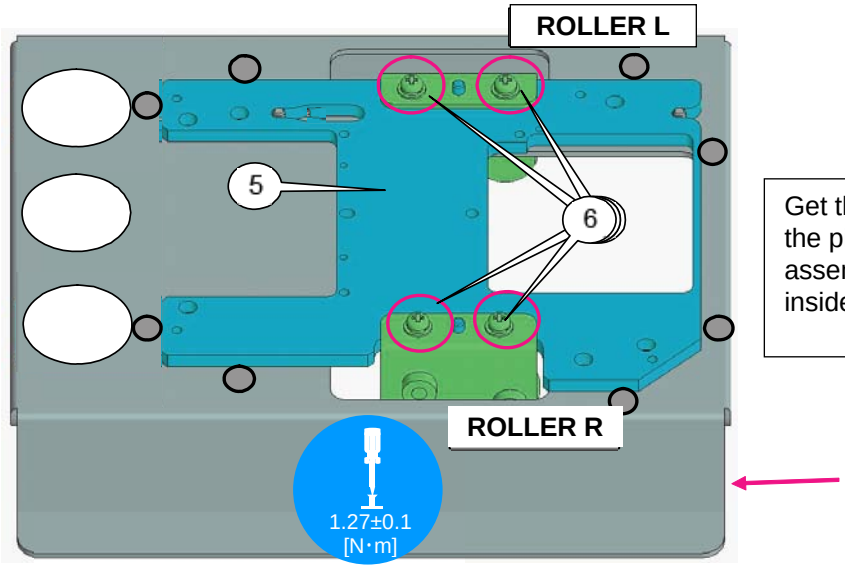

Get the hollow part of the slide plate and the pin of the base jig together and fix the assembly so that the slide plate can settle inside the round boss.

92. PRISM SASSY

	Diagram symbol	Circuit symbol	Part name	Part number	Q'ty	Remarks
	①		PRISM ASSY	82N94121	1	
	②		PRISM ASSY 添付 SCREW		3	Torque management
	③	K60085	GLUE,SCREW LOCK	92201082		Amount used = approx. 0.02g×3 points

[1] Install the prism Assy after the completion of joint.

Apply the SCREW LOCK after tightening the screw.
After installation, remove the jig handle.

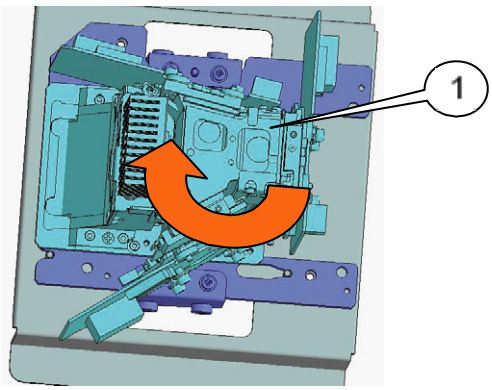

Tool: Ball driver bit of 3mm in ball diameter

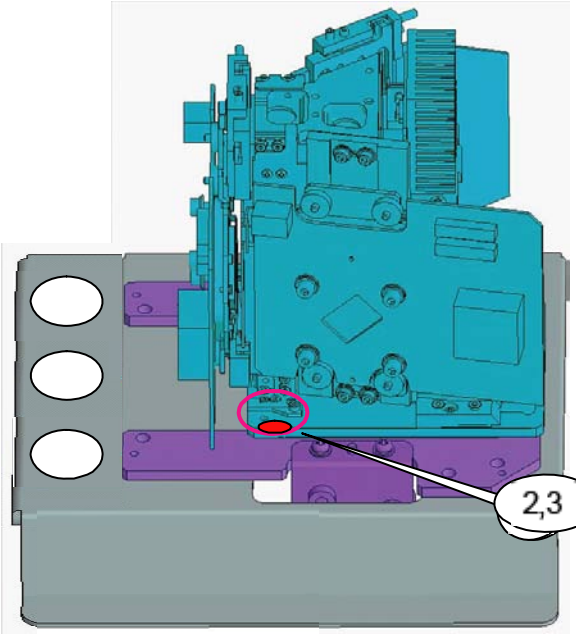

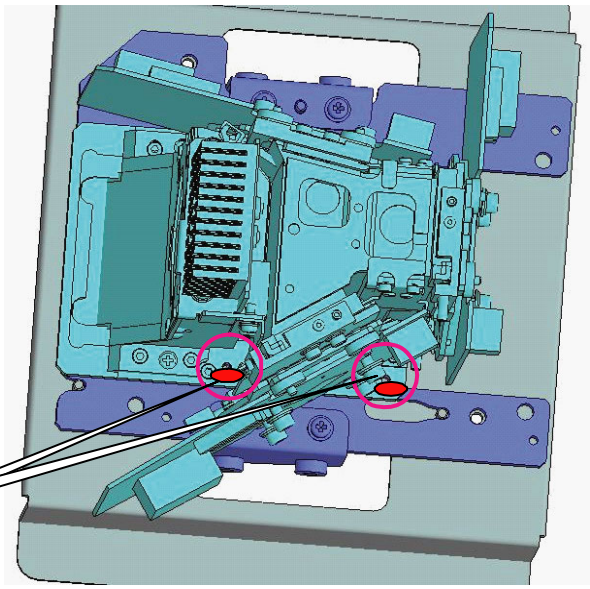

93. PRISM SASSY

	Diagram symbol	Circuit symbol	Part name	Part number	Q'ty	Remarks
	①	S52001	SPECIAL SCREW(M3,D=4)	24N06341	12	Torque management
	②	K52003	SPRING(K=0.92,L=8.2)	24H45922	12	
	③	K52002	WASHER(D6,T1.5)	24H52701	4	

[1] Mount the Cooled jacket applied the silicon oil to the Prism Assy.
To be tightened in the order of numbers shown in the illustration below.

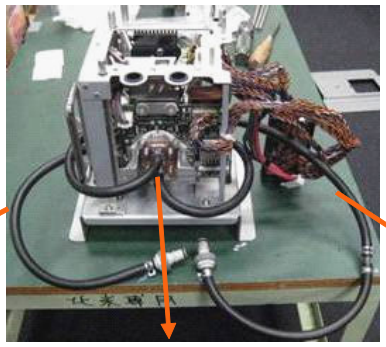

Install a longer liquid cooling tube on the R side.

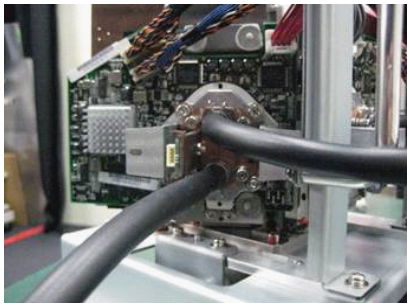

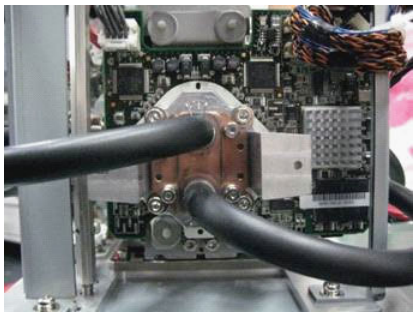

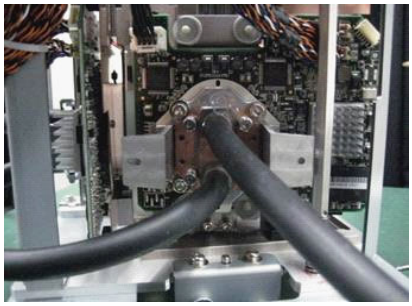

B

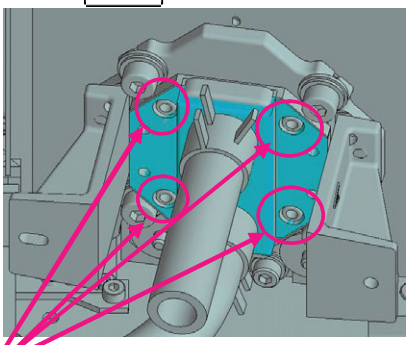

G

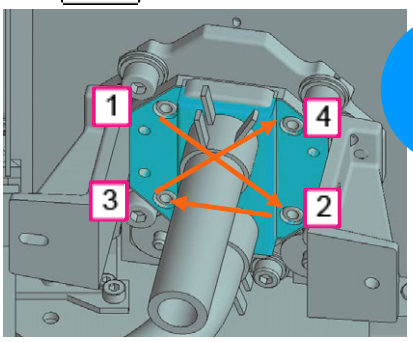

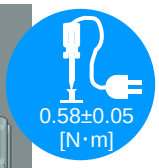

R

How to combine screws, springs, and washers when installing the liquid cooling jacket

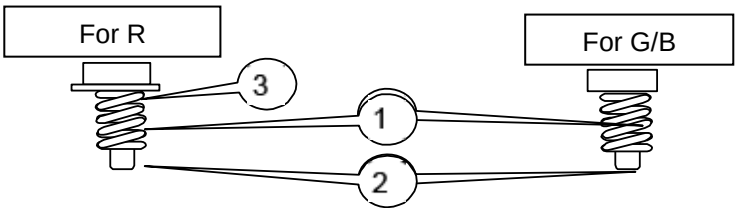

94. PRISM SASSY

	Diagram symbol	Circuit symbol	Part name	Part number	Q'ty	Remarks
	①	PF	CN24-WP(PF) 250X 1007-22	7NWLV005	1	

[1] Mount the CN(SF,SF1) and CN(PF) to the FSB PWB.

* Caution

Check whether the 40P connectors on the FSB PWB are free from any bent pins. After that, insert cables in the connectors on the FSB PWB.

Confirm that the connectors are free from clearing and they are assuredly inserted.

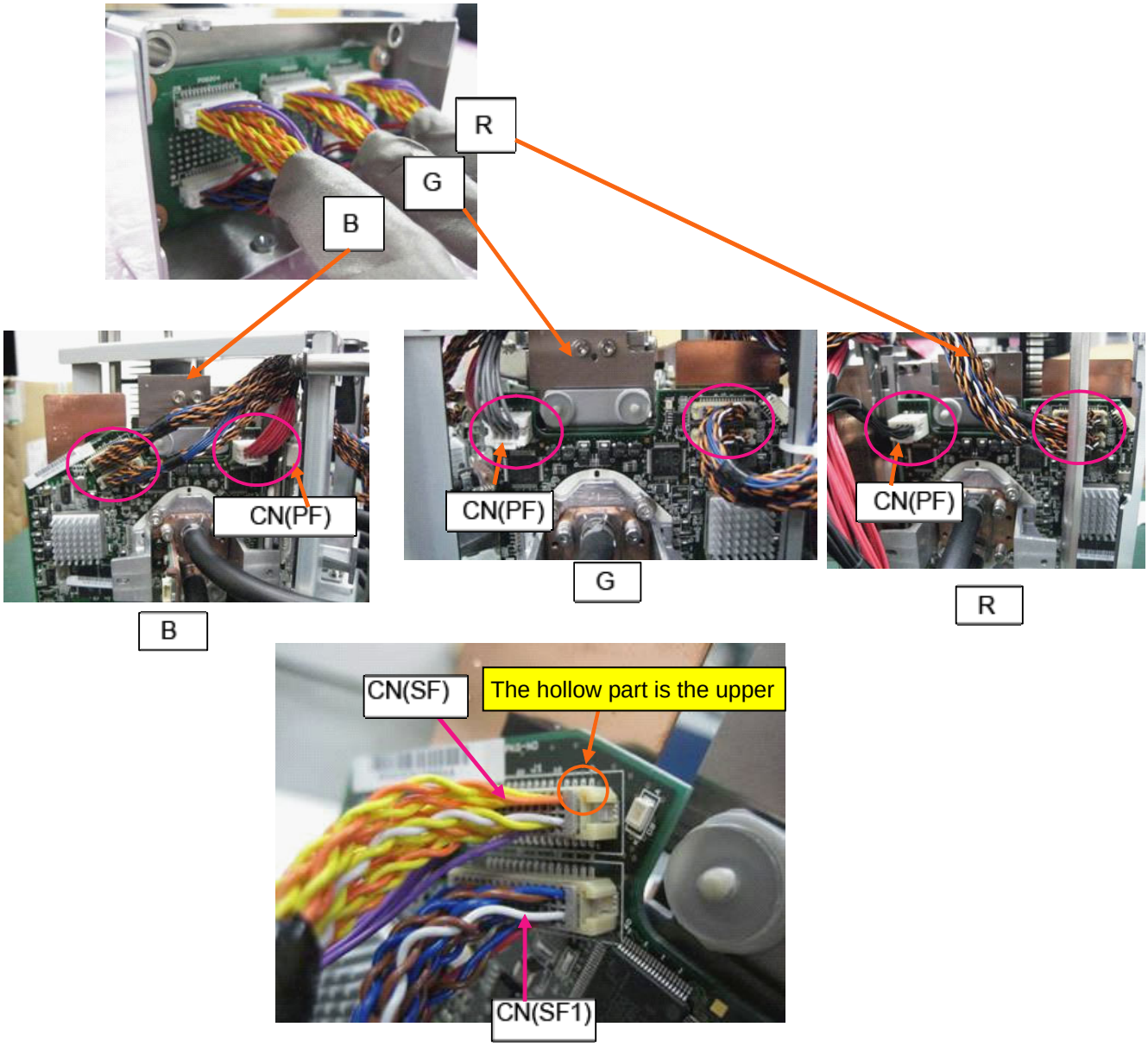

95. PRISM SASSY

	Diagram symbol	Circuit symbol	Part name	Part number	Q'ty	Remarks
	①	K13001	SLIDE(TOP)ASSY	24HS4952	1	
	②	K13008	HANDLE(THA-31SUS-5)	24C08531	2	
	③	S13004	PL-CPIMS*5*12*3KF	24V00151	4	Torque management
	④	K13007	GROMMET(G-50)	24C07691	2	

[1] Mount the Handle (THA-31SUS-5) and Grommet (G-50) to the Slide (top) Assy.
Push the grommet in the handle hole and fit it in the groove (hollow part).

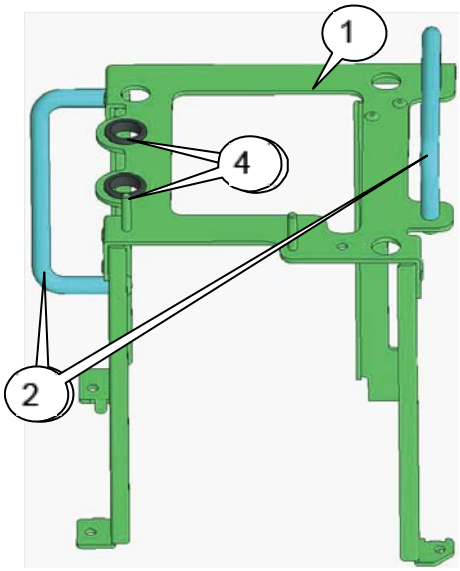

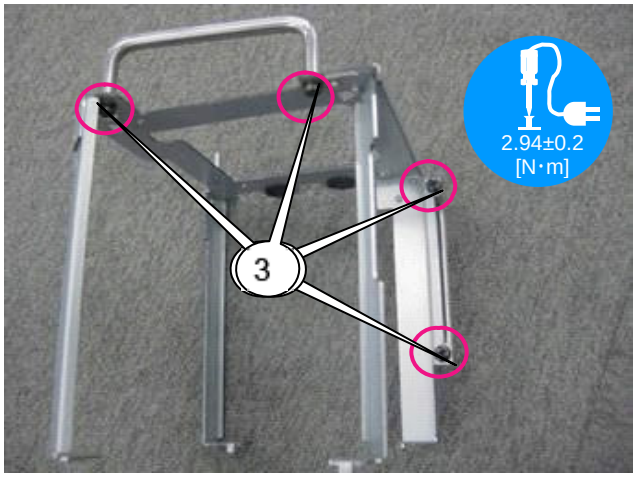

96. PRISM SASSY

	Diagram symbol	Circuit symbol	Part name	Part number	Q'ty	Remarks
	①	S13005	PL-CPIMS*4*8*3GF	24V00591	4	Torque management

[1] Mount the Slide (top) Assy assembled in the previous page.
At the time of installation, sufficiently pay attention not to permit the frame of the blue dotted line in the diagram below to come in contact with the prism or the board.
Confirm that the bent positioning legs of the Slide (TOP) Assy are entered in the slide plate holes.
For the CN (SF, SF1) and the CN (PF), cabling shall be made beneath the Slide (TOP) Assy.
Adjust and install the cables so that they can be led out of the R side.

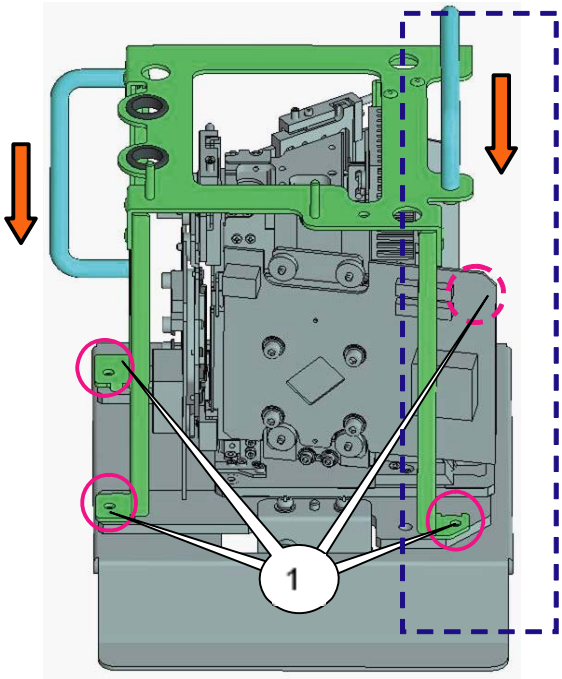

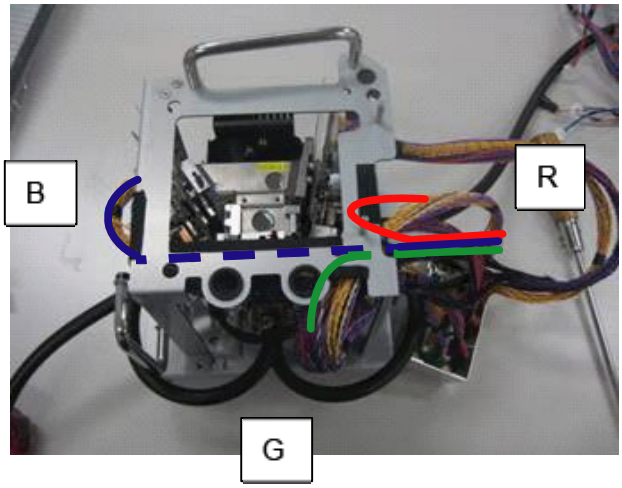

97. PRISM SASSY

	Diagram symbol	Circuit symbol	Part name	Part number	Q'ty	Remarks
	①	K13018	BAND(L=100 T18R)	24C09121	4	

[1] Bundle the respective cables with bands (L=100 T 18R).
When bundling the CN (SF, SF1), some allowance should be provided between band and FSB so that there is no strain in cables.

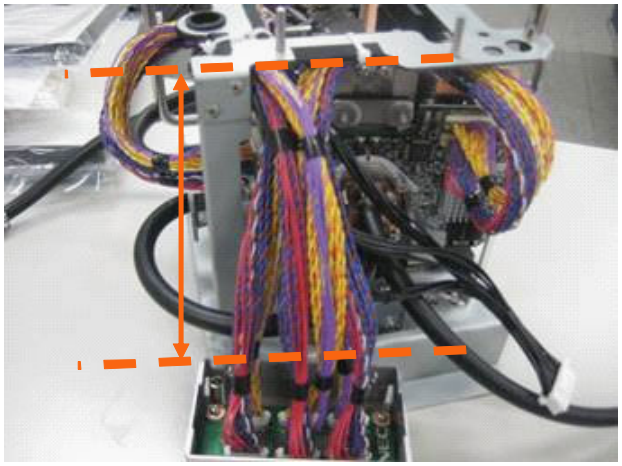

Adjust the length of cables going toward the FSB-B so that the collective connectors of the relay PWB can maintain the same height as that of the Slide (TOP) Assy when the cables are made to droop. After that, adjust the length of each cable between the FSB Relay PWB and the Slide (TOP) Assy so that this length becomes identical with that of cables going toward the FSB-B.

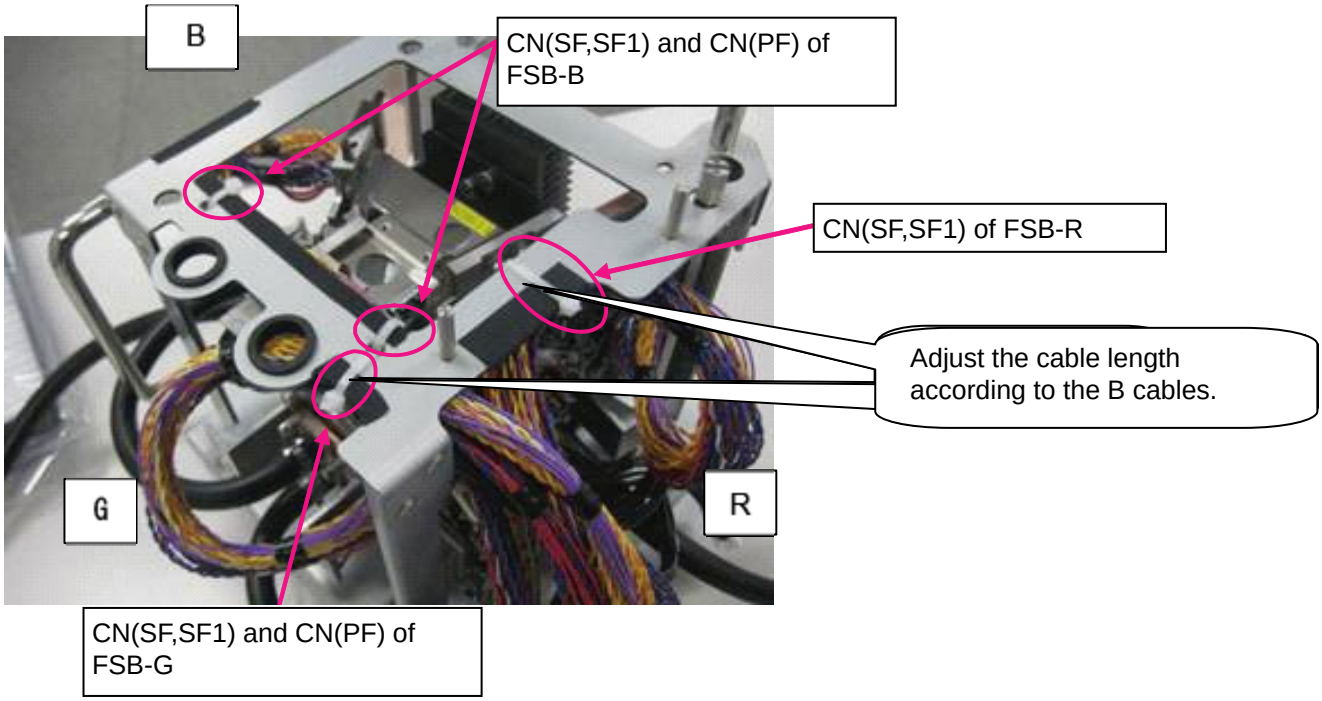

98. PRISM SASSY

	Diagram symbol	Circuit symbol	Part name	Part number	Q'ty	Remarks
	①	K13010	SHAFT(LOCK)	24H68262	3	
	②	S13007	HHCS*3*6*3GF	24N05081	6	Torque management
	③	S13006	PIWA*6*3KF	24V00871	3	
	④	K13009	SPRING(UF10-30)	24C09731	3	
	⑤	K60085	GLUE,SCREW LOCK	92201082		Amount used = approx. 0.02g×6 points

[1] Mount the HHCS*3*6*3GF on the threaded part of the shaft, and put the assembly in the hole located on the slide (TOP) top. Install the assembly on the slide plate together with the spring and PIWA. (3 positions)
Apply the GLUE SCREW LOCK after mounting the HHCS*3*6*3GF.

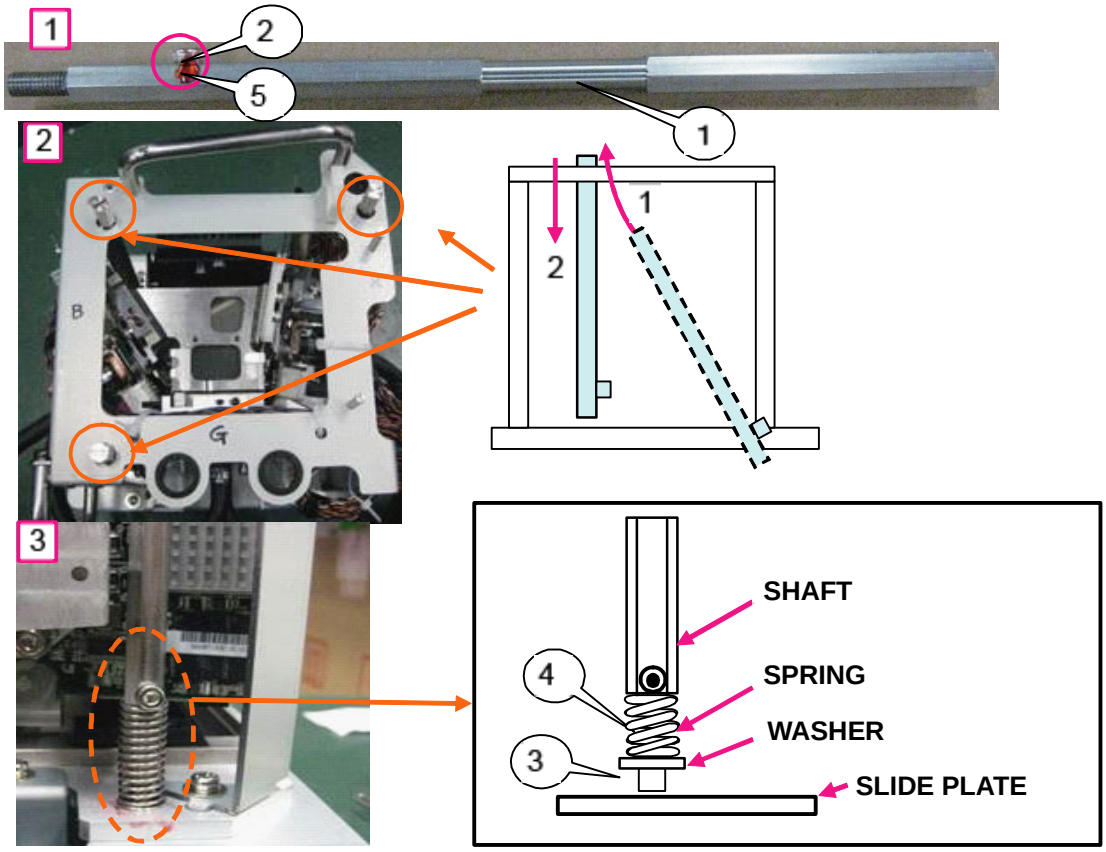

[2] Mount the HHCS*3*6*3GF to the upper side of the shaft.
Tighten the shaft and install it where the screw hole can be seen.

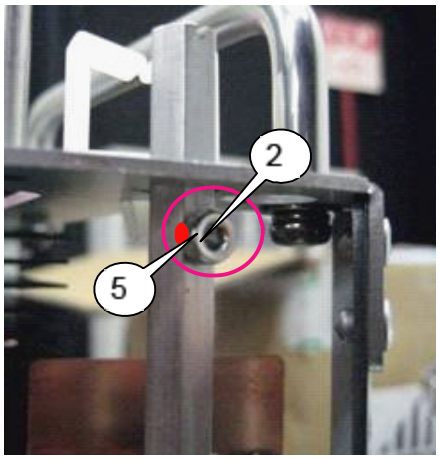

The screw of HHCS*3*6*3GF should be installed at the same level as that of the lower part of the shaft.

99. SET SASSY

	Diagram symbol	Circuit symbol	Part name	Part number	Q'ty	Remarks
	①		DUCT(TOP) SASSY		1	
	②	S60061	PL-CPIMS*4*10*3KF	24V00461	4	Torque management

[1] Mount the duct (PWB FAN) Assy assembled to the Set Assy.

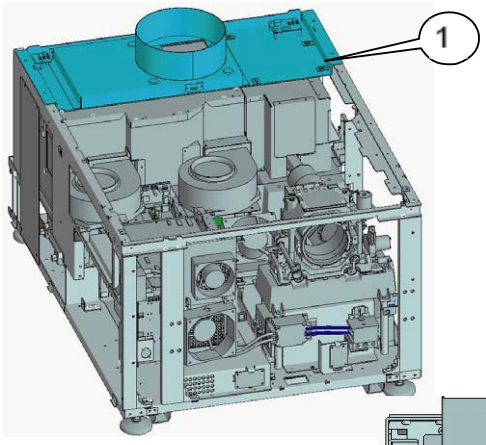

Top View

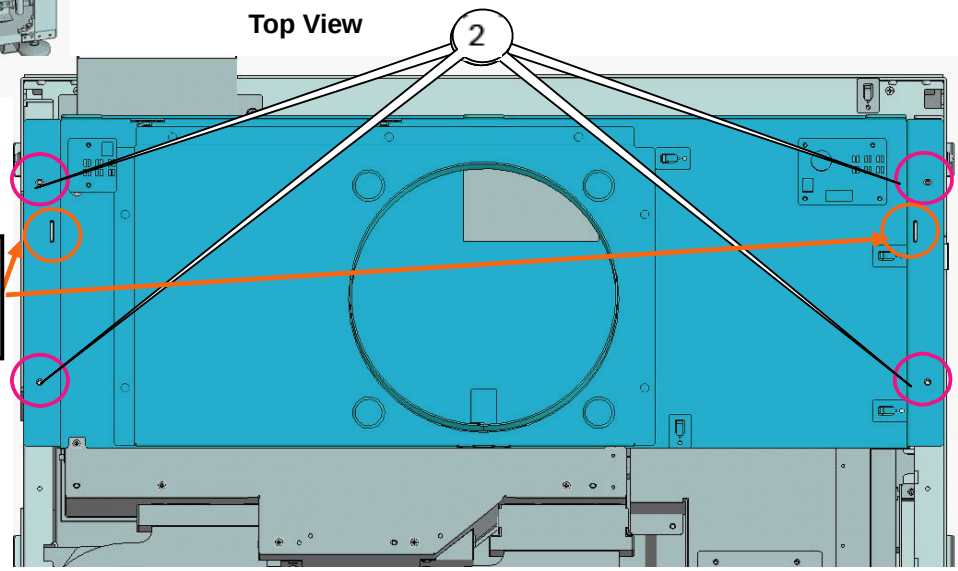

Put the claws of the chassis base in the duct (TOP) slide for positioning.

100. SET SASSY

	Diagram symbol	Circuit symbol	Part name	Part number	Q'ty	Remarks
	①		DUCT(LAMP FAN) SASSY		1	
	②	S60074	PL-CPIMS*4*10*3KF	24V00461	2	Torque management

[1] Mount the duct (LAMP FAN) Sassy assembled to the Set Assy.

Top View

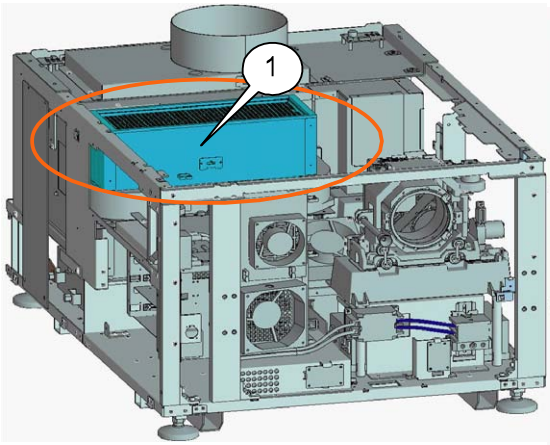

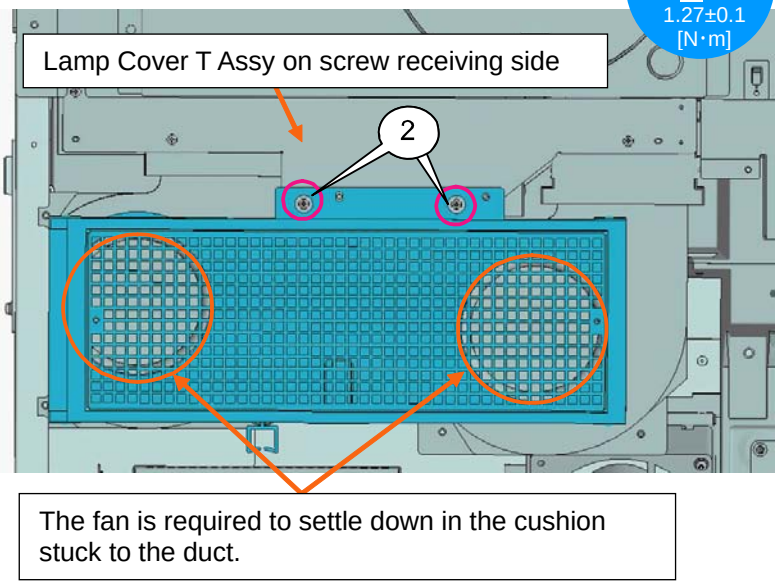

[2] Insert the [SLC] connector of the CN (CN7) in the TEMP Assy and bundle it with the wire saddle.

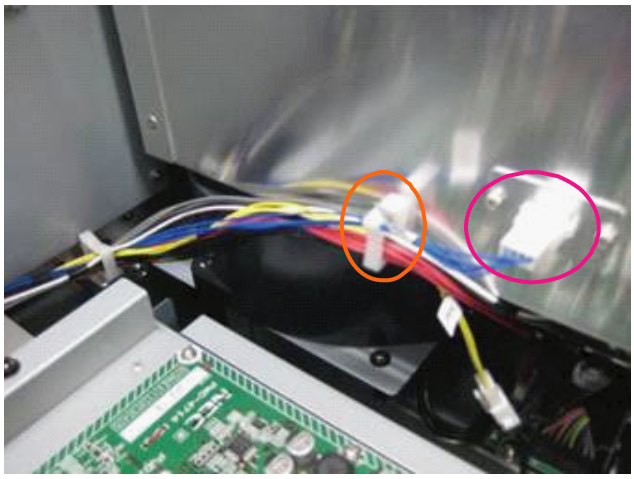

101. SET SASSY

	Diagram symbol	Circuit symbol	Part name	Part number	Q'ty	Remarks
	①		THERMOSTAT CS-7SA-95A	7N970103	1	
	②	S78004	CPIMS*2.5*6*3GF	24V01361	2	Torque management
	③	CN5-1	CN2-WP(TH)325X 3265-24	7NW2V002	1	

[1] Mount the thermostat.

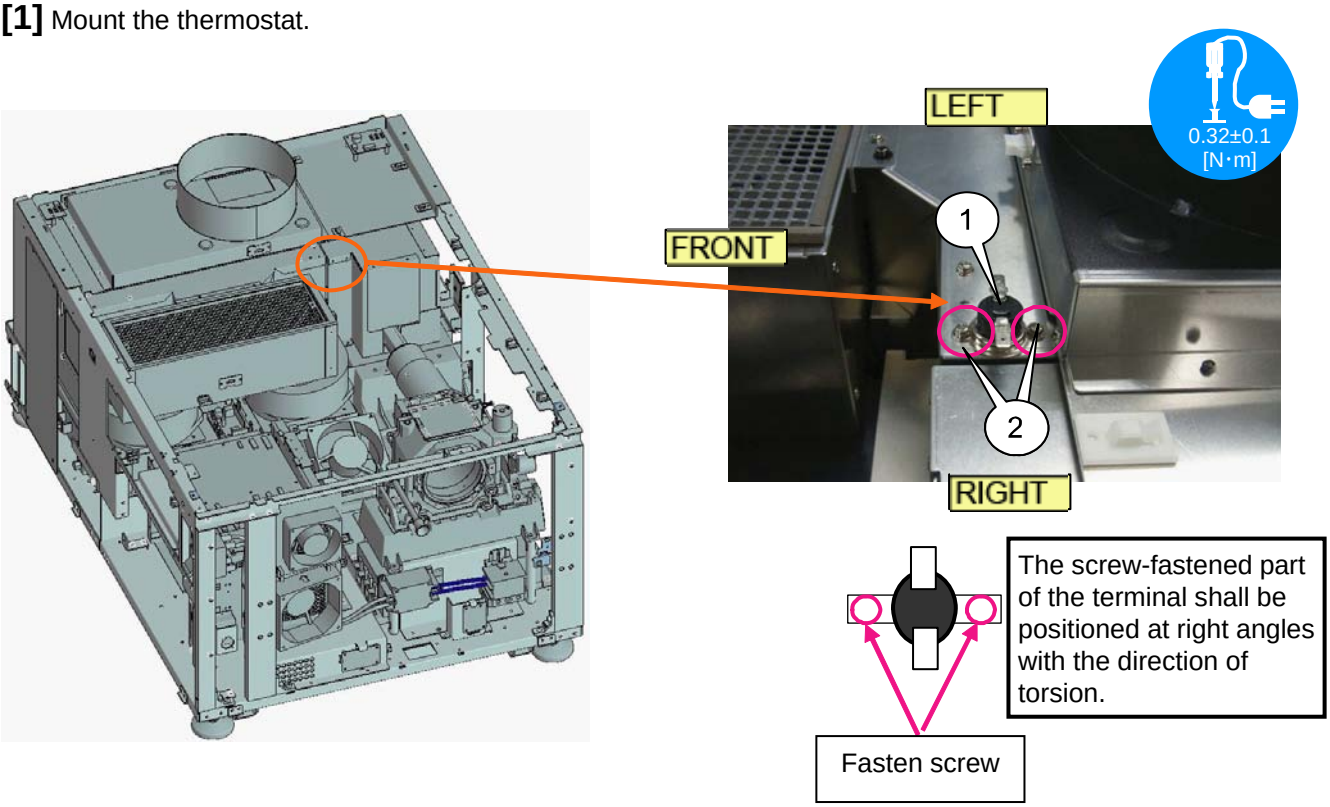

[2] Mount the CN (TH) on the thermostat and bundle it with cable clips.

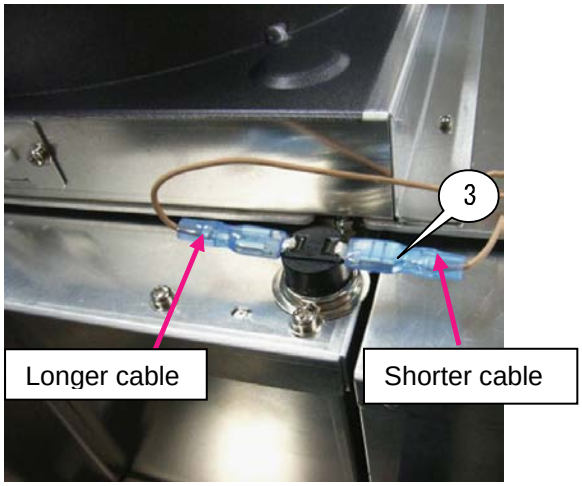

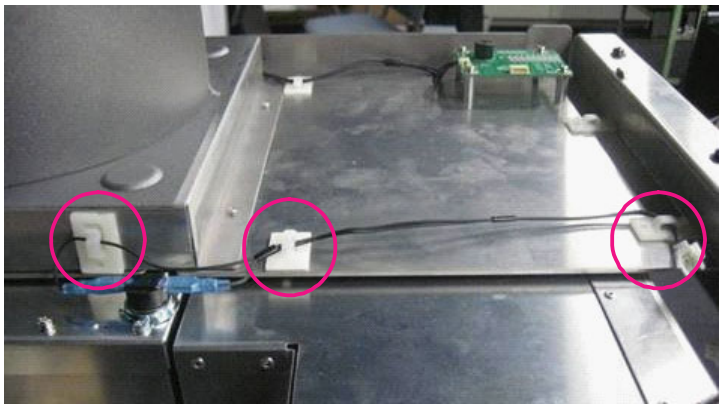

102. SET SASSY

	Diagram symbol	Circuit symbol	Part name	Part number	Q'ty	Remarks
	①		CABLE CLIP(FCA-10)	24C02841	1	

* This page provides the explanations about the illustrations used for the cabling stated on next page.

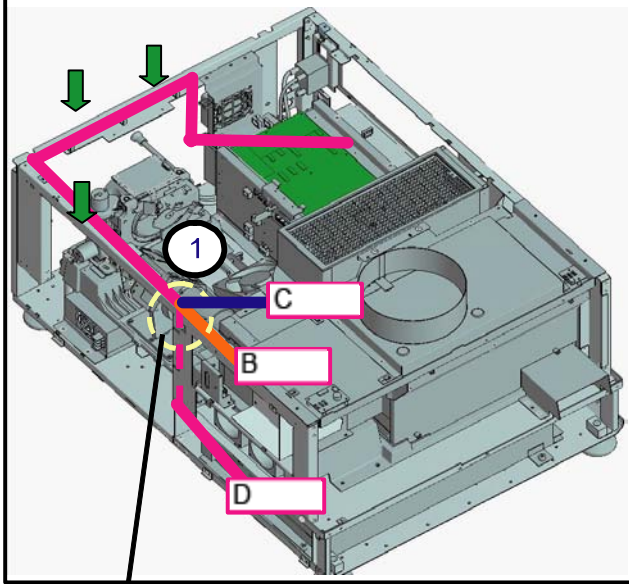

1 : Cable branches

: Trunks

: Branches

: Cable hidden as seen from the viewpoint in illustrations

: Destination connector

: Bundling position

Lay cables while bundling them with wire saddles and edge saddles located along the cable path.

[1] Stick cable clips to the purple round section in the illustration below.
Stick it based on the bent part of the metallic plate.

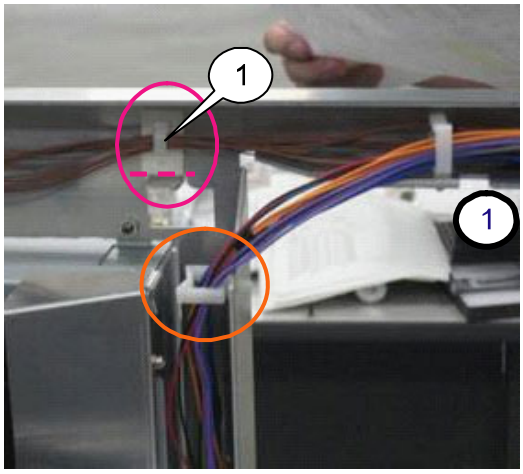

At the branch point in the illustration above
The branch cables of the CN (CN5, CN3, CN1) shall be laid by means of cable clips stuck to the frame top.
For other cables going downwards through the vertical frame, they shall be laid through the wire saddles.

103. SET SASSY

	Diagram symbol	Circuit symbol	Part name	Part number	Q'ty	Remarks
	①	CN6	CN16-WP(CN6)270X 1061-24	7NWFV001	1	

[1] Insert the CN (CN6) in the DIV PWB and make connections and cabling.

B: Router (relay) (white, black)
C: ANAMO (brown)
D: Front fan (upper) (red)
E: Front fan (lower) (orange)

Branch connector at each branch point (◯)

Branch 1	ANAMO (brown) Front fan (lower) (orange) Front fan (upper) (red)

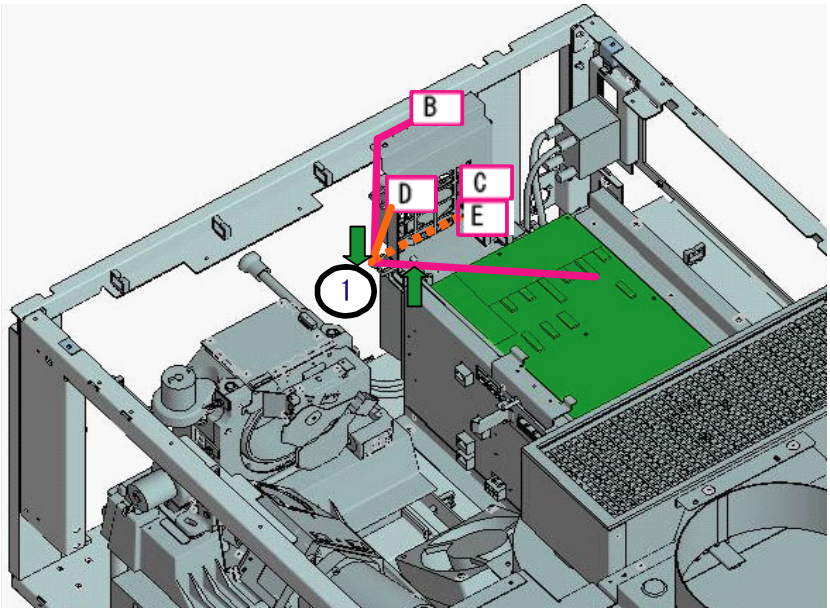

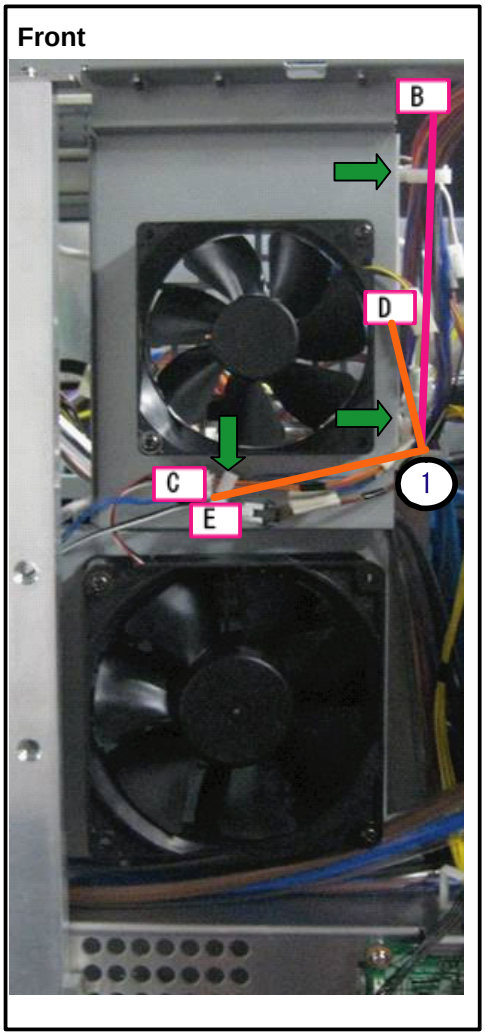

104. SET SASSY

	Diagram symbol	Circuit symbol	Part name	Part number	Q'ty	Remarks
	①	ANA	CN3-2P(ANA)200W 1061-24	7NW3W098	1	
	②	S60011	SL-CPIMS*2.5*6*3GF	24V01361	2	

[1] Mount the CN(ANA), and connect the CN(ANA) to the CN(CN6).
Make cabling with the wire saddle in the center of the duct (PWB FAN). Make connections with the CN (CN6) there.

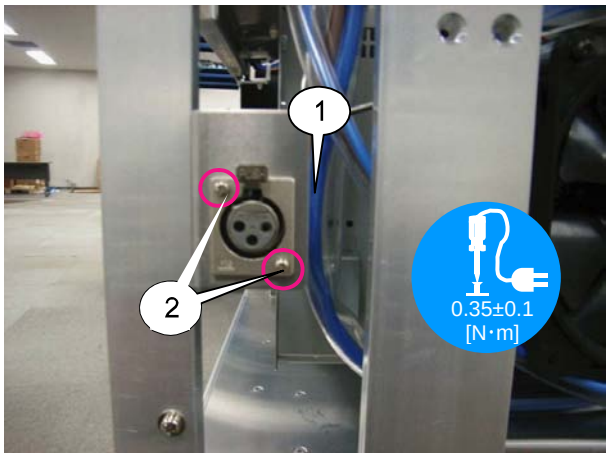

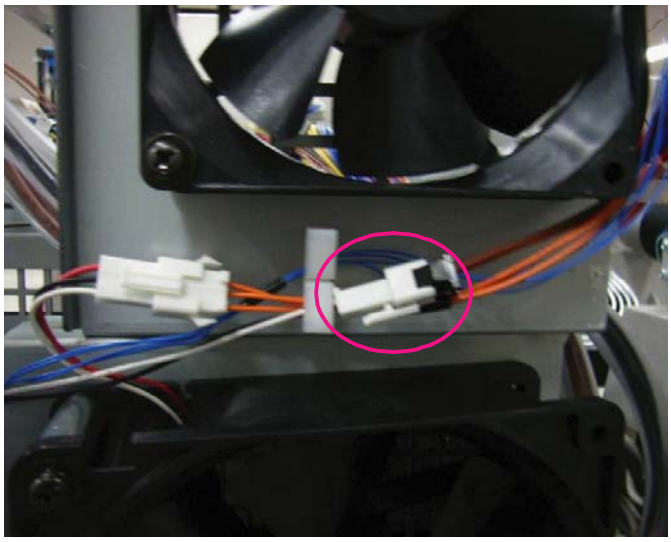

105. SET SASSY

	Diagram symbol	Circuit symbol	Part name	Part number	Q'ty	Remarks
	①	CN5	CN20(CN5)940W,1061-24	7NWLV003	1	

[1] Insert the CN(CN5) to the DIV PWB, and wire it.

B: Bimetal (relay) (brown)
C: FSB-B cooling fan (red) ··· To be inserted in the latter process.

D: Pump (orange)··· To be inserted in the latter process.

E: Prism cooling (upper) (yellow) To be inserted in the latter process.

F: Prism cooling (lower) (blue) [BP]
G: ROD cooling (purple) [RD]
H: CM cooling (gray) [CM]

Branch connector at each branch point (◯)

Branch 1	Prism cooling (upper) (yellow)
Branch 2	FSB-B cooling fan (red)
Branch 3	Bimetal (brown)
Branch 4	Pump (orange) ROD cooling (purple) Prism cooling (lower) (blue)

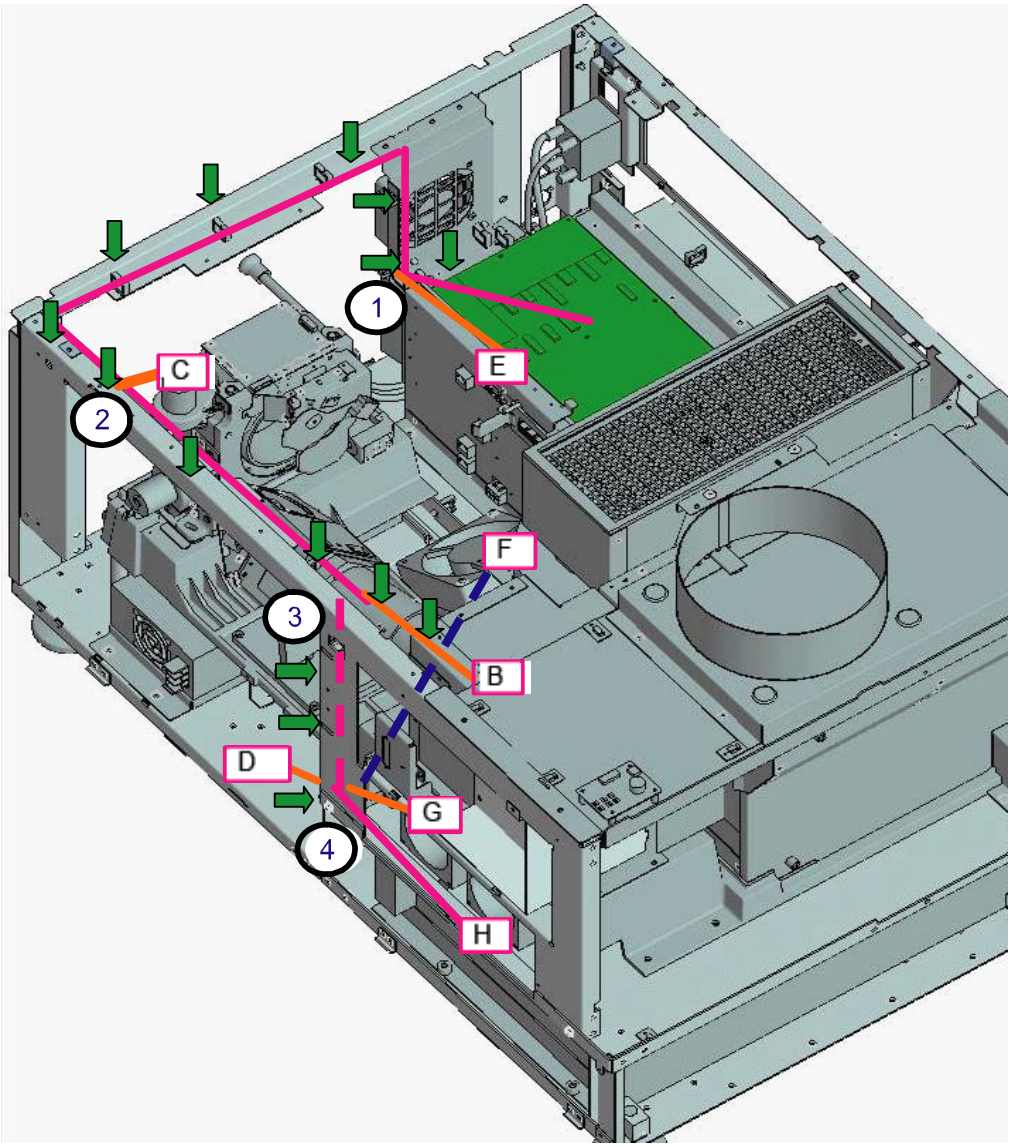

106. SET SASSY

	Diagram symbol	Circuit symbol	Part name	Part number	Q'ty	Remarks
	①	K60083	CABLE CLIP(FCA-10)	24C02841	2	
	②	K60087	CABLE CLIP(FCA-10)	24C02841	2	

[1] Stick a cable clip according to the dotted line indicated in the illustration and bundle the cables that are going to the DMD fan.
The arrow mark in the illustration indicates the direction for cable fastening.

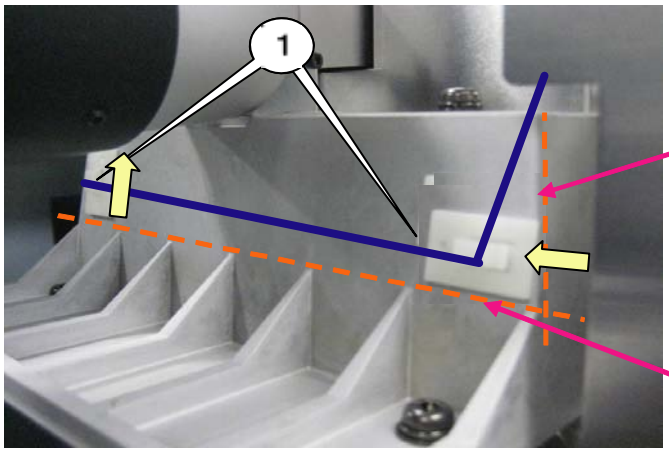

Edge line of the base (ENGINE)

Line above the groove wall of the base (ENGINE)

[2] Install cable clips below the C/M cooling fan for cabling.
Apply its right section to the duct side and stick it according to the edges at both ends of the fan.
Apply the center of the fan to the duct side and stick it in the middle of fan to fan.
The arrow mark in the illustration indicates the direction for cable fastening.

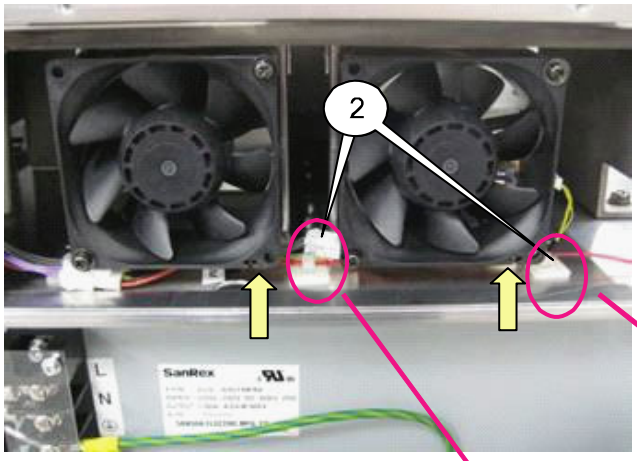

To be used in the latter process.

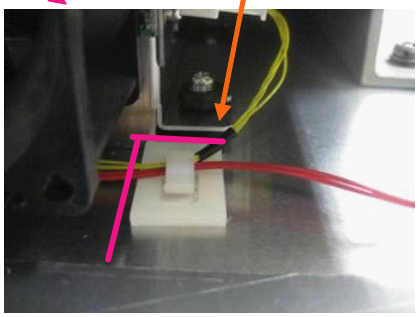

107. SET SASSY

	Diagram symbol	Circuit symbol	Part name	Part number	Q'ty	Remarks
	①	CN3	CN16-WP(CN3)1540X 1061-26	7NFFV001	1	

[1] Insert the CN (CN3) in the DIV PWB for cabling.

B: LED (brown)
C: L-SENS (black)
D:REAR COVER(RED)

Branch connector at each branch point (◯)

Branch 1	LED (brown)
Branch 2	L-SENS (black)
Remainder	Rear cover (red)

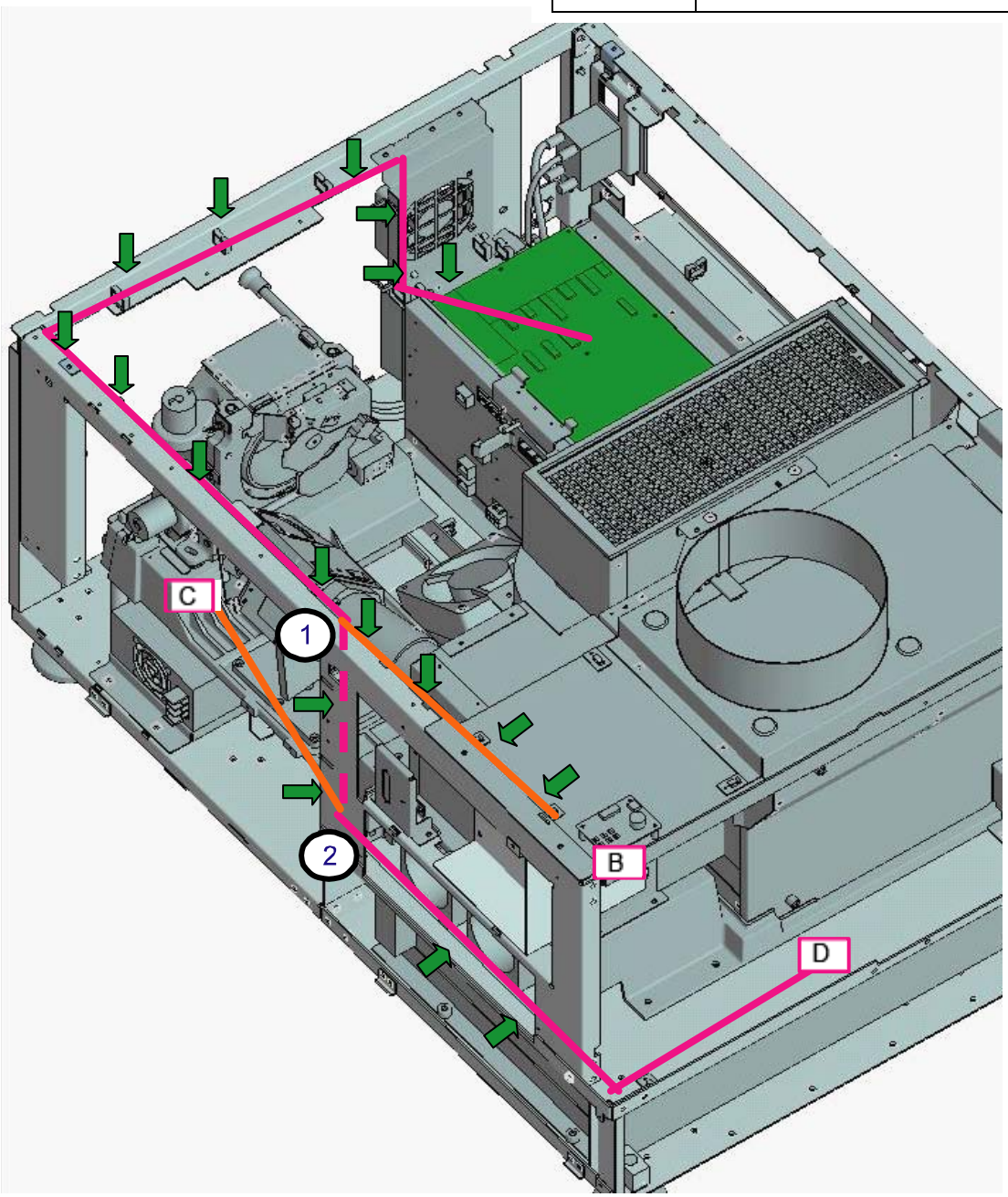

108. SET SASSY

	Diagram symbol	Circuit symbol	Part name	Part number	Q'ty	Remarks
	①	K60083	CABLE CLIP(FCA-10)	24C02841	1	

[1] Stick the cable clips to the base (ENGINE) for cabling and insert the assembly in the L-SENS PWB.
The arrow mark in the illustration indicates the direction for cable fastening.

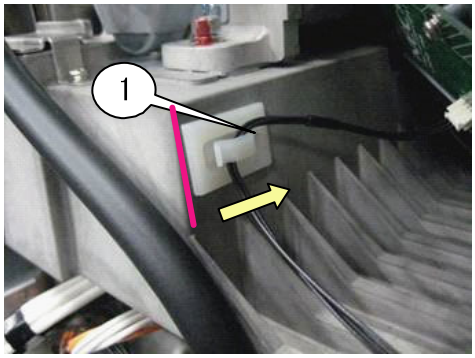

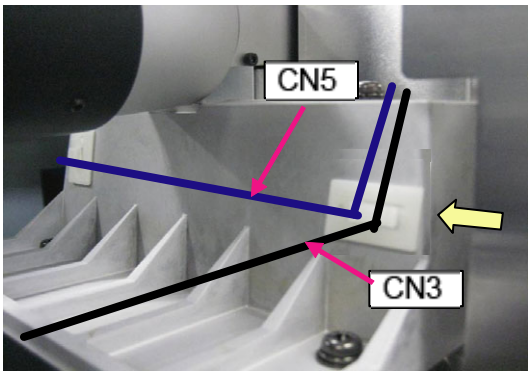

Adhesion along the edge of the base (ENGINE)
Adhesion in the plane center in vertical directions

[2] Bundle the D cables of the CN (CN3) with cable clips.

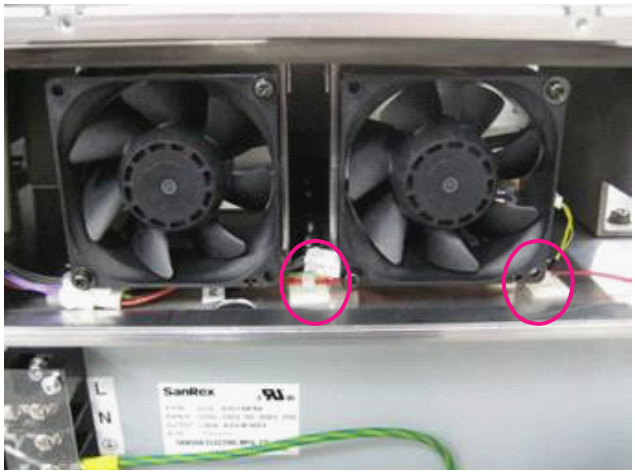

[3] Bundle the B cables of the CN (CN3) and insert it in the SLED-A PWB.

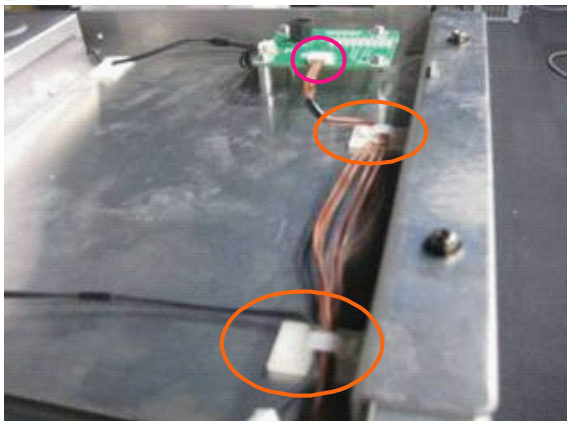

109. SET SASSY

	Diagram symbol	Circuit symbol	Part name	Part number	Q'ty	Remarks
	①		COVER PWB ASSY	81T19ZC1	1	
	②		BRACKET(COVER SW)	24H68451	1	
	③	K48002	EDGE SADDLE	25283461	1	
	④	S48001	CBIMS*2*8*3GF	24V01031	2	Torque management
	⑤	K60085	GLUE,SCREW LOCK	92201082		Amount used = approx. 0.02g×2 points
	⑥	S60052	CFIMS*3*6*3KF	24V00421	2	Torque management
	⑦	K60087	CABLE CLIP(FCA-10)	24C02841	1	

[1] Mount the Cover PWB and Edge saddle to the Bracket (cover SW).
Apply GLUE SCREW LOCK after mounting.

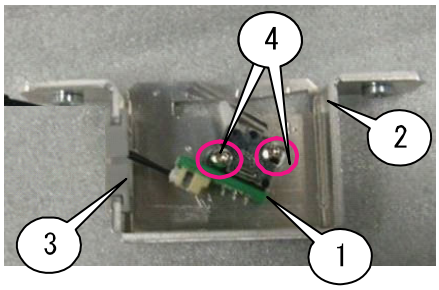

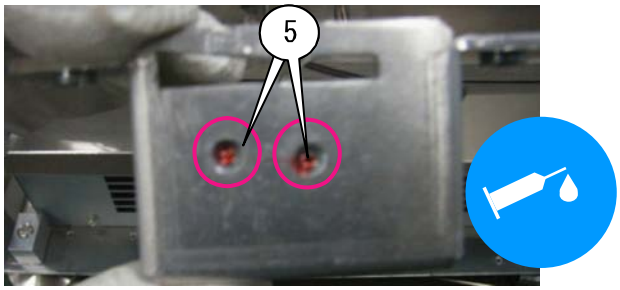

[2] Insert the CN3 to the Cover PWB, and mount it to the Set Assy.

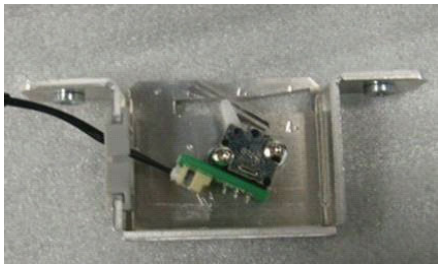

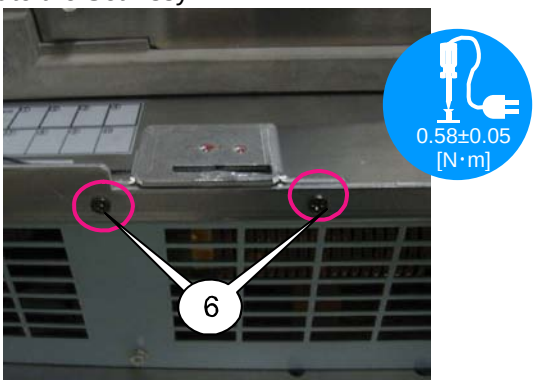

[3] Paste the cable clip, and wire the cable.
Stick the cable clips according to the holes of the frame.
The arrow mark in the illustration indicates the direction for cable fastening.

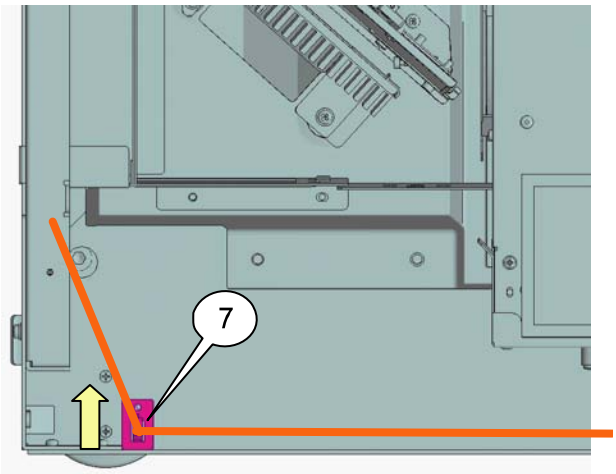

110. SET SASSY

	Diagram symbol	Circuit symbol	Part name	Part number	Q'ty	Remarks
	①	CN2	CN22-WP（CN2）500X,1061-26	7NWLV002	1	

[1] Insert the CN(CN2) to the DIV PWB, and wire it.

B: Tamper (upper right) (gray)
C: Tamper (lower right) (purple)
D: Lens mount (blue)
E: PEDE-A (yellow)

Branch connector at each branch point (○)

Branch 1	PEDE-A (yellow)
Branch 2	Lens mount (blue)
Branch 3	Tamper (upper right) (gray)

B: The connector shall be carefully inserted in the Tamper (top right) (Gray). (See the next page.)

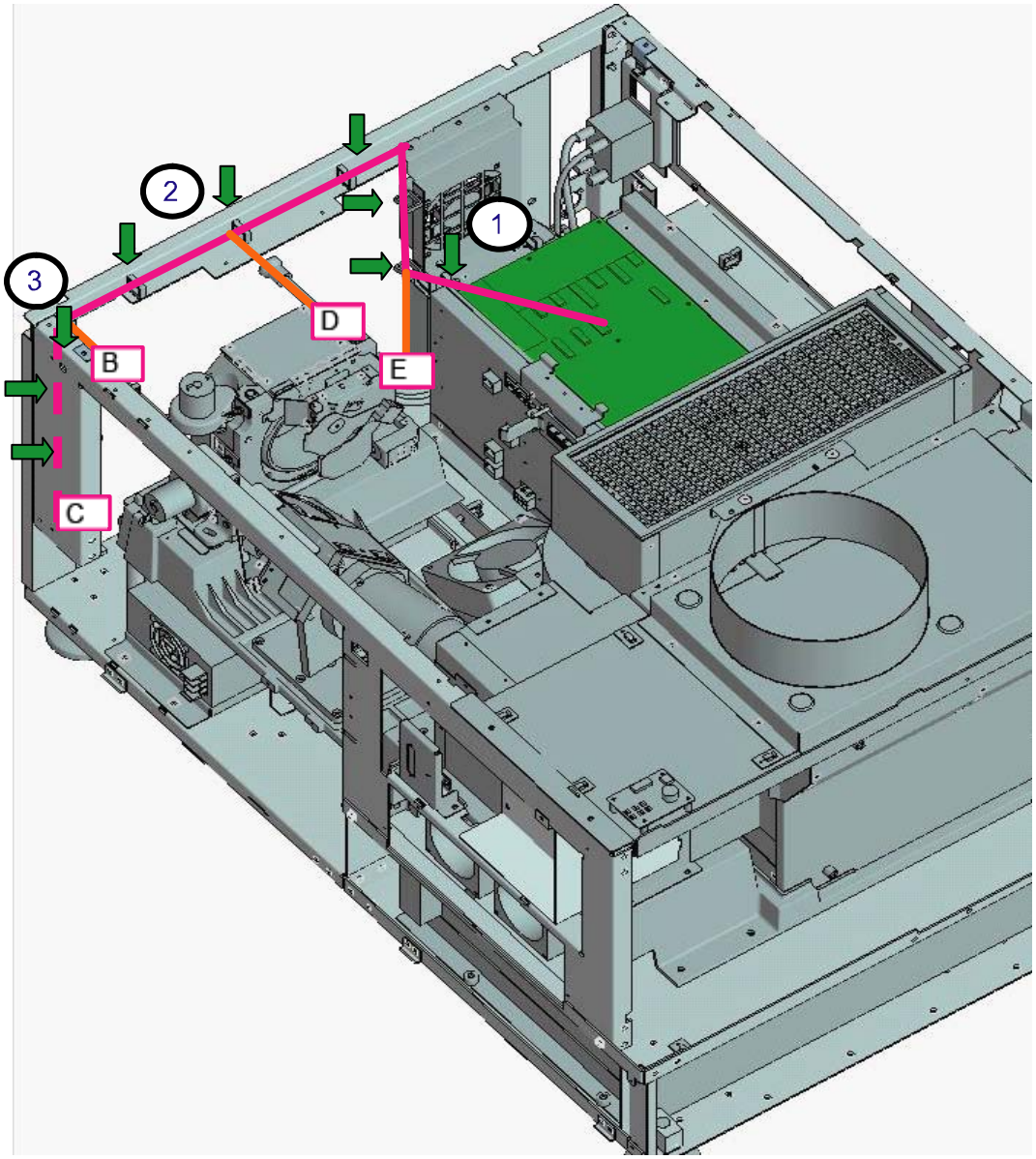

111. SET SASSY

	Diagram symbol	Circuit symbol	Part name	Part number	Q'ty	Remarks
	①	K60087	CABLE CLIP(FCA-10)	24C02841	2	

[1] Insert the B cables of the CN (CN2) in the PEDE-A PWB.
Lay cables with the wire saddles illustrated below.

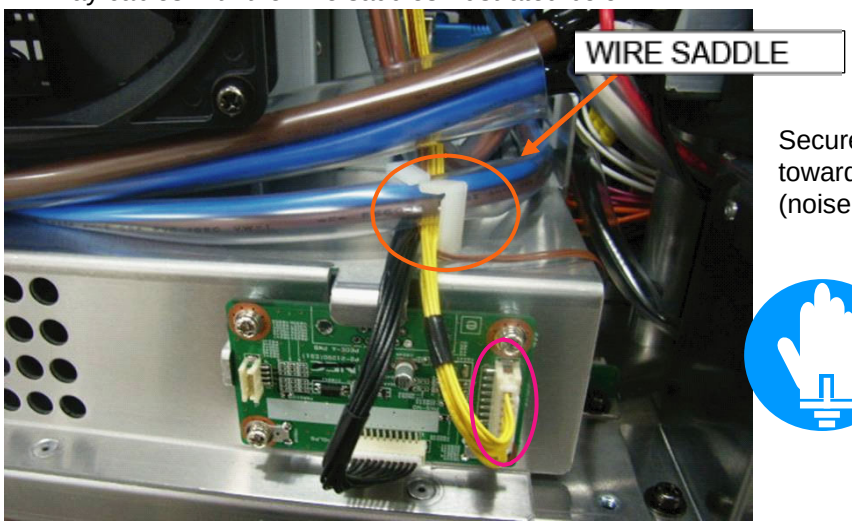

Secure the safety distance toward the primary side (noise filter).

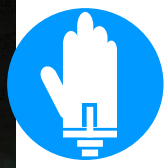

[2] Insert the D cables of the CN (CN2) in the Lens Mount PWB.

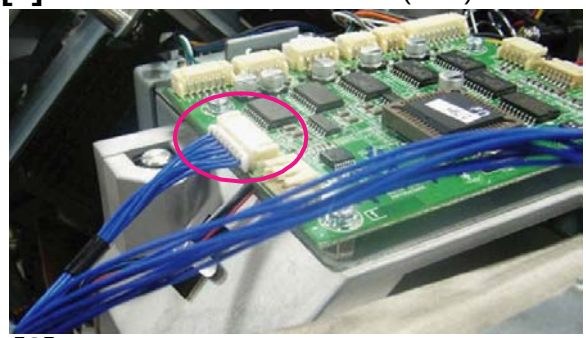

[3] Stick the cable clips and lay the C cables of the CN (CN2) going to the Tamper (F).
Stick the cable clips being pressed against the lower side of the screw and the corner part of the frame.
The arrow mark in the illustration indicates the direction for cable fastening.
When inserting a cable in the Tamper PWB, hold the metallic plate to prevent it from being bent.

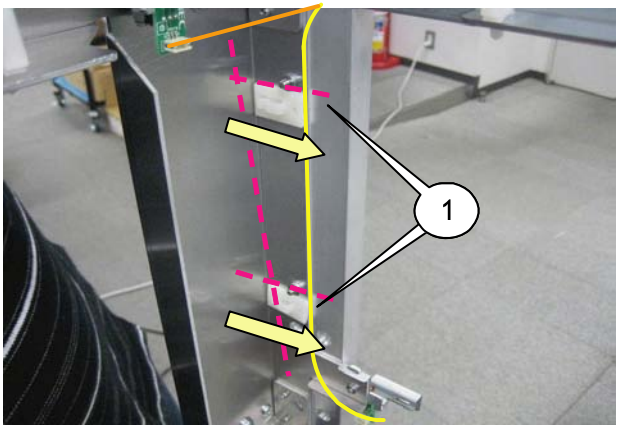

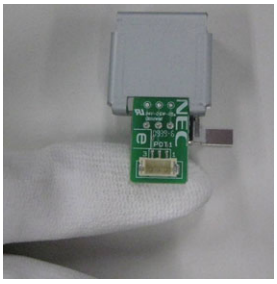

112. SET SASSY

	Diagram symbol	Circuit symbol	Part name	Part number	Q'ty	Remarks
	①	CN1	CN30-WP(CN1)490W,1571-28	7NWLV001	1	

[1] Insert the CN(CN1) to the DIV PWB, and wire it.

B: Air TENS (lower front side - center) (brown)
C: B-DMD TENS (red) ... To be inserted in the latter process.
D: Exhaust TENS (orange) [SOT]
E: CM cooling TENS (yellow) [SCM]
F: Case (TI) Assy TENS (front fan) (blue)
G: Water cold Assy TENS (purple) [SWC]

To be inserted in the latter process. 。

Branch connector at each branch point (◯)

Branch 1	PEDE-A (yellow)
Branch 2	Lens mount (blue)
Branch 3	Tamper (upper right) (gray)
Remainder	CM cooling TENS

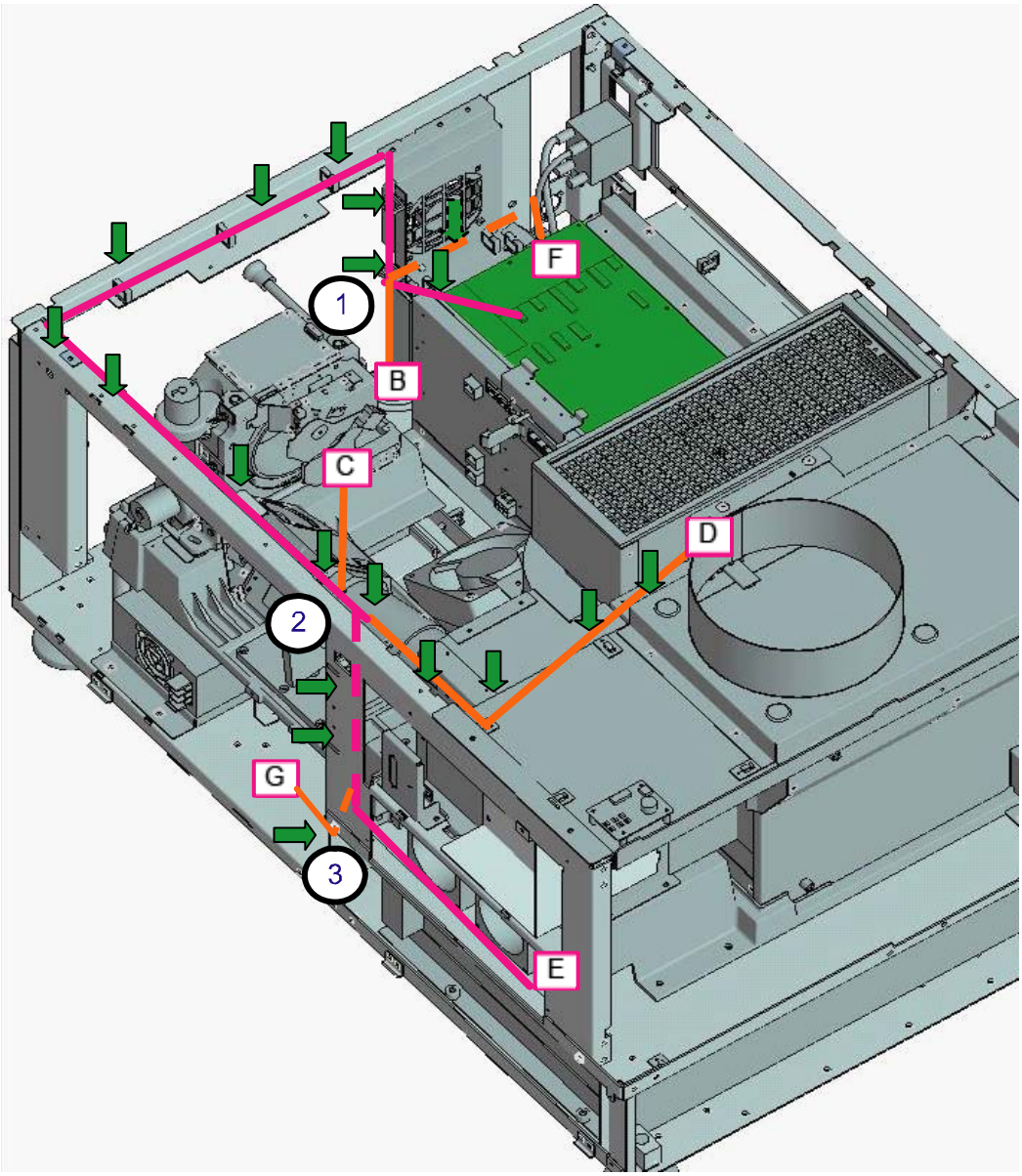

113. SET SASSY

[1] Insert the Line B of CN(CN1) in the TSEMS (base), and bundle them with the Wire saddle on the PEDE-A PWB.

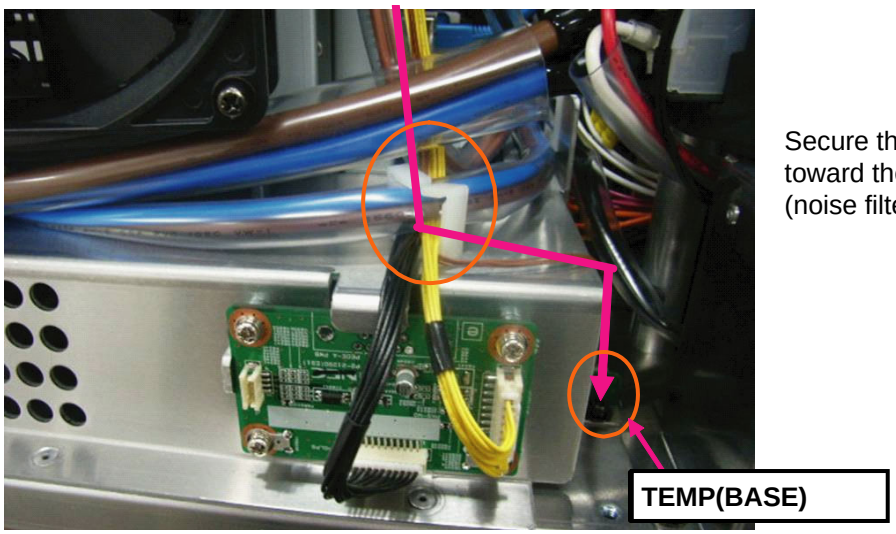

Secure the safety distance toward the primary side (noise filter).

[2] Insert the CN(CN1) in TSENS of the Duct (PWB fan).

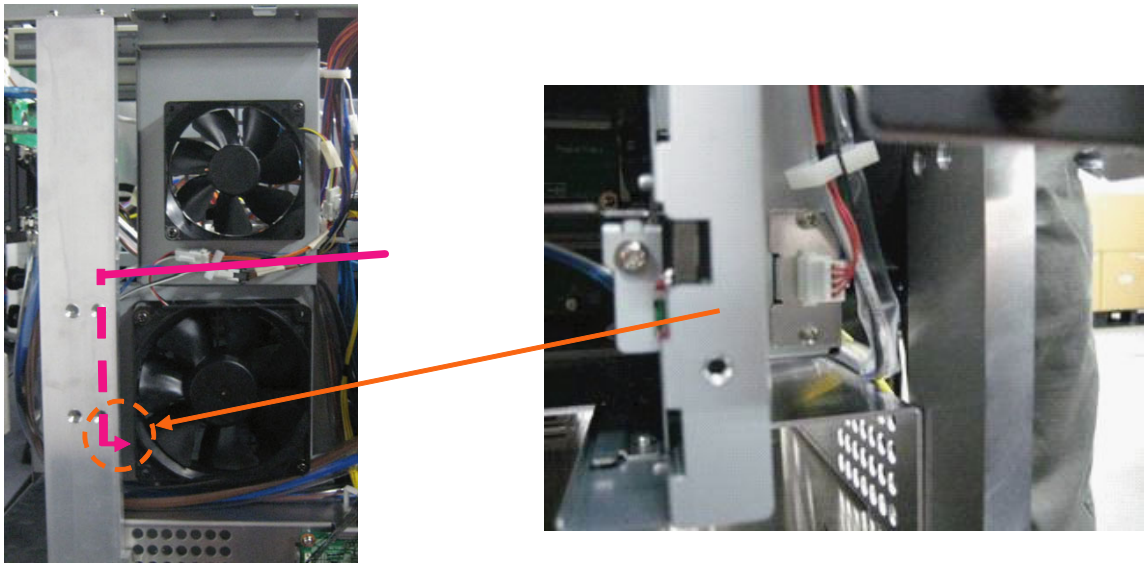

[3] Insert the CN (CN1) in the Duct (CM) TENS and lay cables with cable clips.

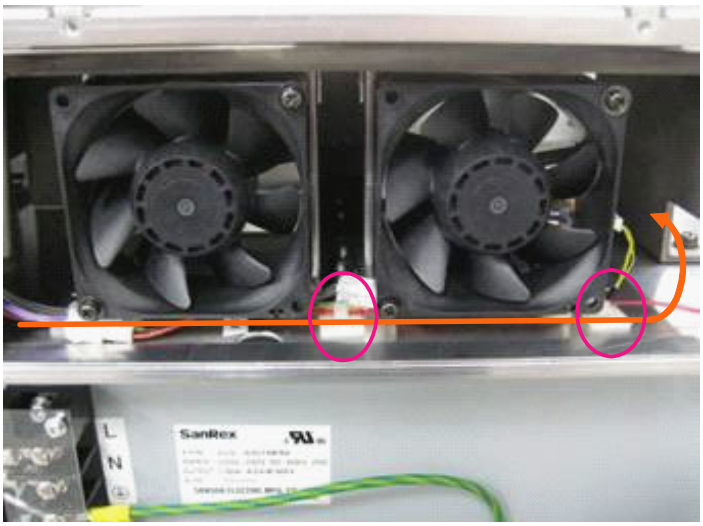

114. SET SASSY

	Diagram symbol	Circuit symbol	Part name	Part number	Q'ty	Remarks
	①		CTL UNIT SASSY		1	
	②	S60066	PL-CPIMS*4*10*3KF	24V00461	4	

[1] Mount the control panel Sassy.

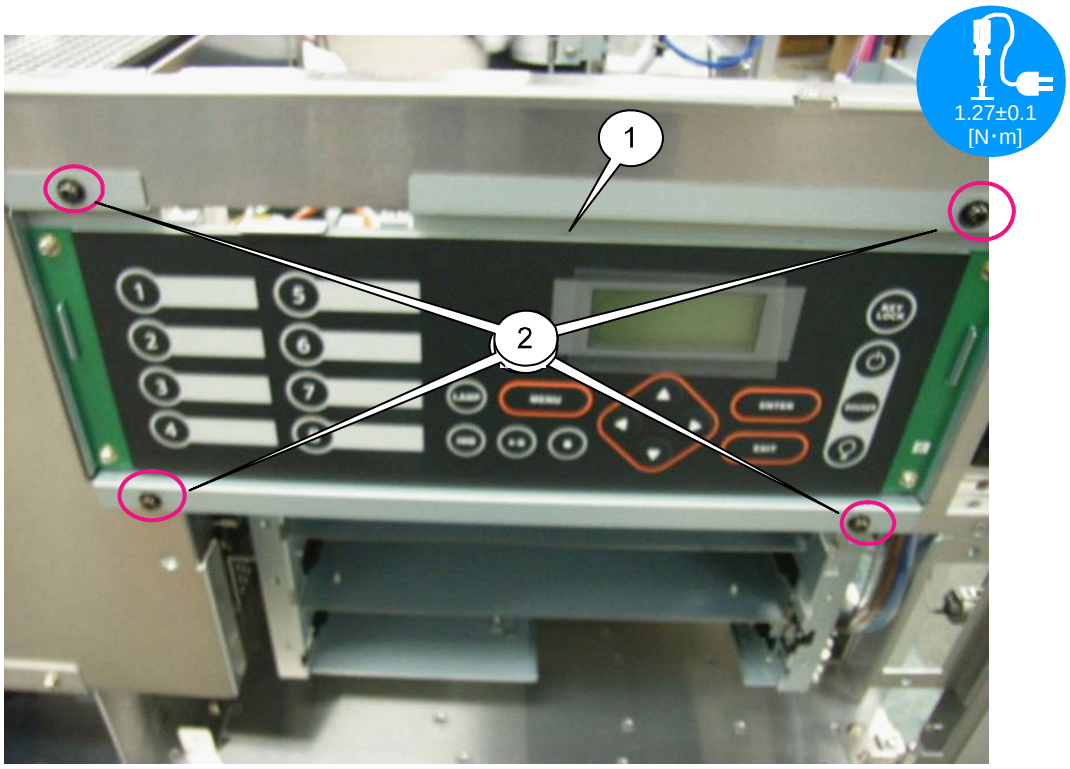

115. SET SASSY

	Diagram symbol	Circuit symbol	Part name	Part number	Q'ty	Remarks
	①		LIGHT PWB ASSY	81T19ZK1	1	
	②	S74002	PL-CPIMS*3*8*3GF	24V00111	2	Torque management

[1] Mount the LED PWB on the CLT unit Sassy.

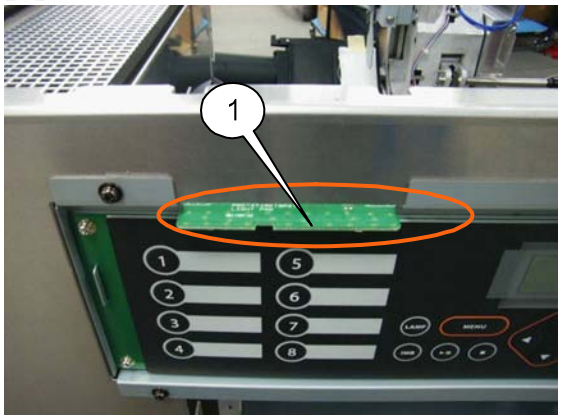

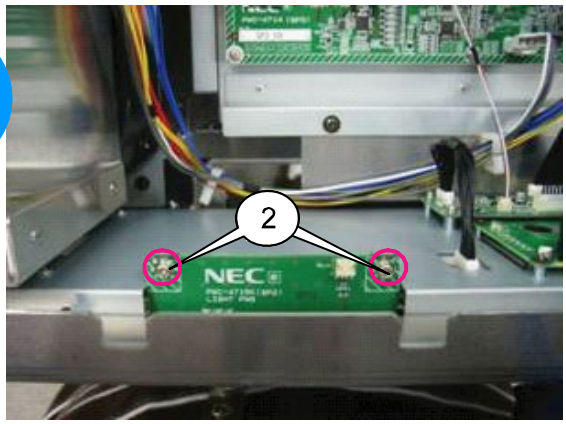

[2] Insert CN(L1) in the LED PWB, and insert CN(IF) in the DIV PWB.

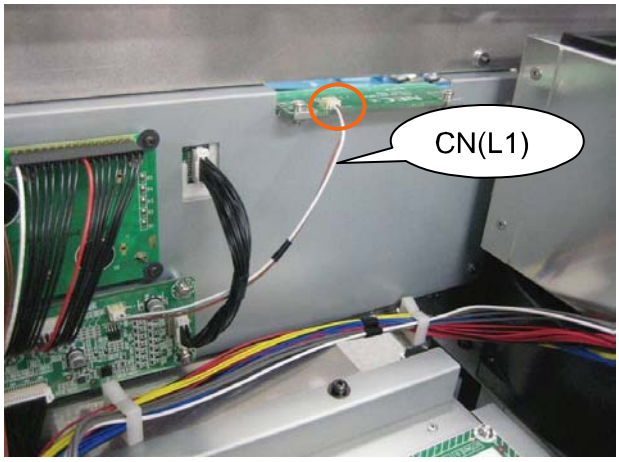

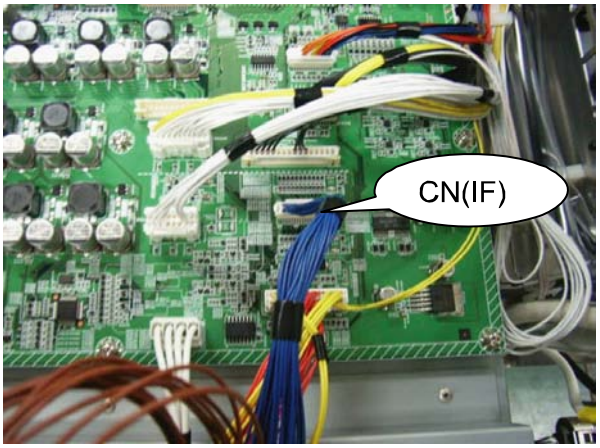

116. SET SASSY

	Diagram symbol	Circuit symbol	Part name	Part number	Q'ty	Remarks
	①		WATER UNIT(TANK) SASSY		1	
	②	S60056	PL-CPIMS*4*10*3KF	24V00461	5	Torque management

[1] Install the water-cooled unit in the set, which has been assembled as per the previous page.
When mounting the tank section, pass it through the frame inside for adequate positioning.
At the time of installation, be careful not to pinch any cables that run inside the frame.

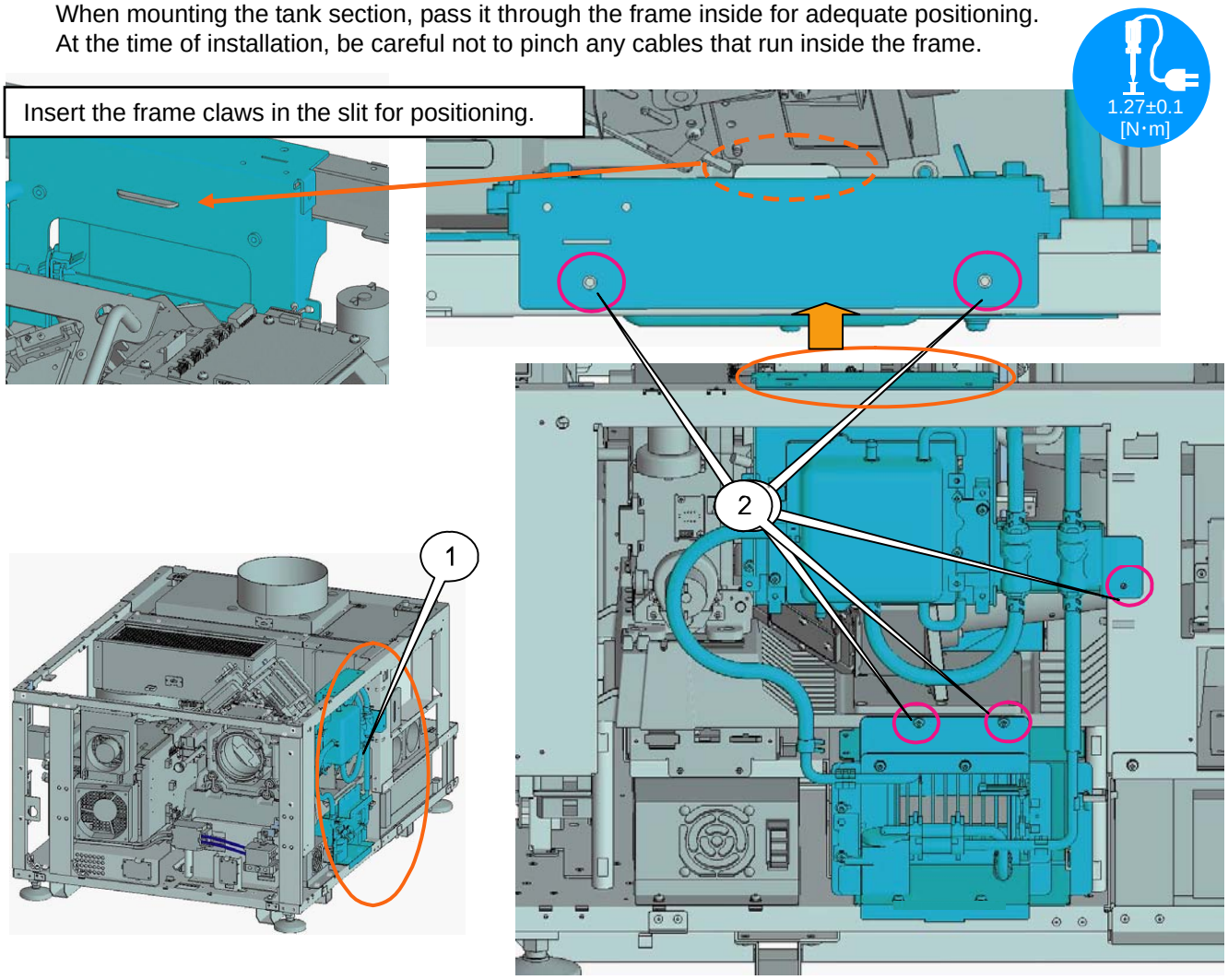

[2] After installation, insert connectors.

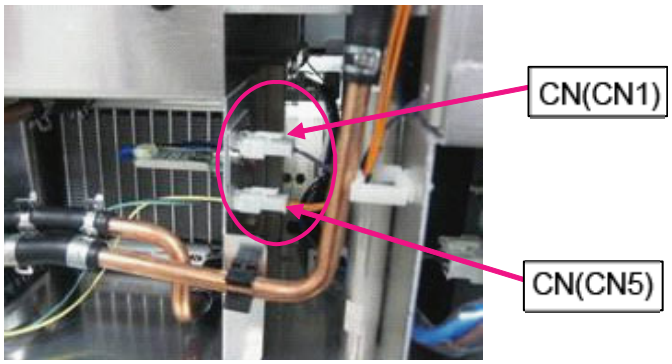

117. SET SASSY

	Diagram symbol	Circuit symbol	Part name	Part number	Q'ty	Remarks
	①		BASE(FAN)B	24H68401	1	
	②	K86003	DCFAN 2406KL-05W-B59-L54	3N170154	1	
	③	K86002	FINGER GUARD	24C04131	1	
	④	S86001	PL-CPIMS*3*25*3GF	24V00301	2	Torque 管理
	⑤	S60076	PL-CPIMS*4*10*3KF	24V00461	2	Torque 管理

[1] Mount the fan and finger guard to the base (FAN) B.
Install the fan so that its arrow mark showing the direction of fan wind comes on the outer side.

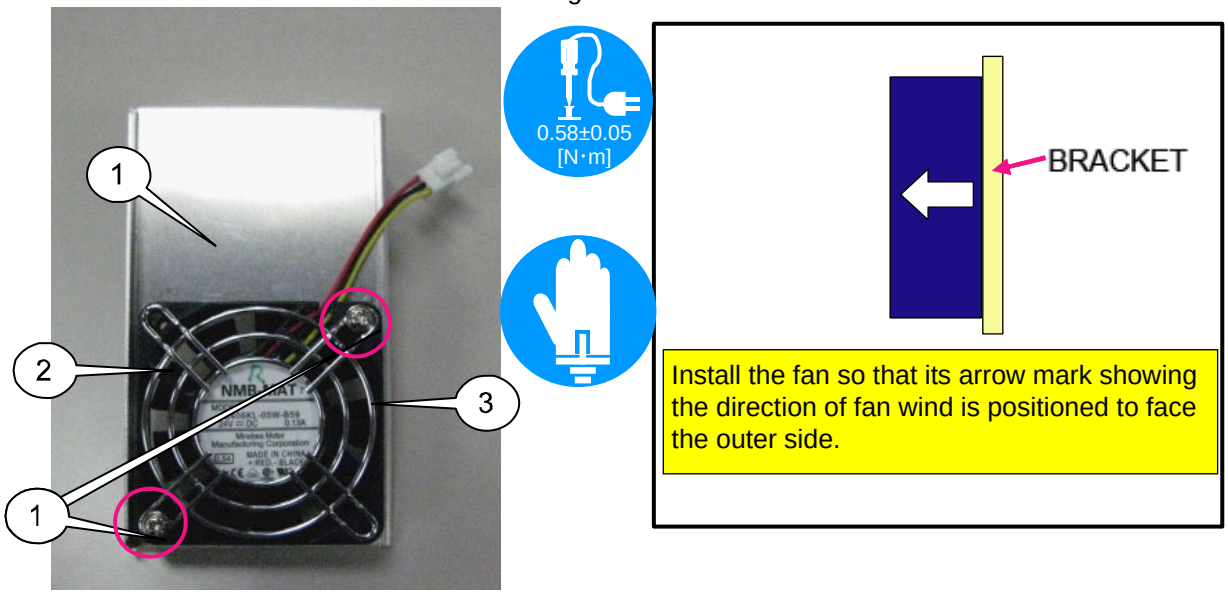

[2] Install the base (fan), which has been assembled as per the previous item, on the base (tank).
After installation, make connections between the CN (CN5) and the fan.

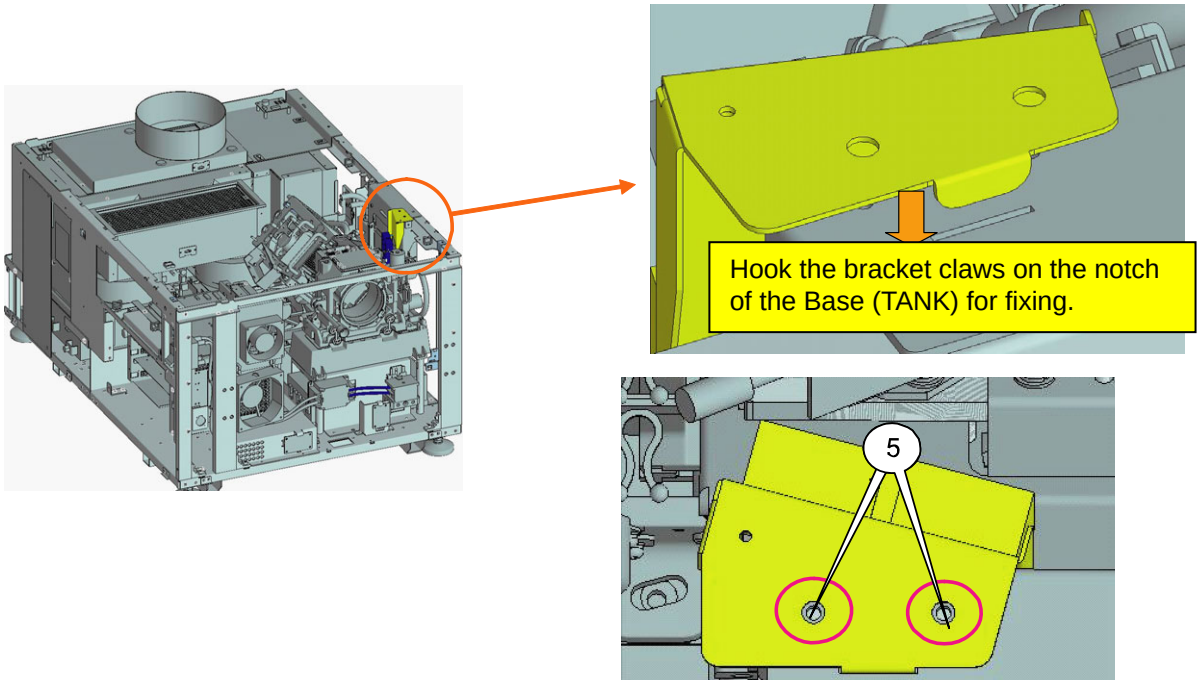

118. SET SASSY

	Diagram symbol	Circuit symbol	Part name	Part number	Q'ty	Remarks
	①	K60085	GLUE,SCREW LOCK	92201082		Amount used = approx. 0.02g×3 points
	②		PRISM SASSY		1	

[1] Peel off the protection sheet that is attached to the lens side of the OPT engine. Apply a screw lock agent to the threaded hole of the OPT engine and mount the prism Sassy on the OPT engine.
When the prism has been lowered to the OPT engine (Arrow Mark 1), slide it along the rail (Arrow Mark 2).
For this work, hold the handle assuredly and pay attention not to hit any other parts with it.

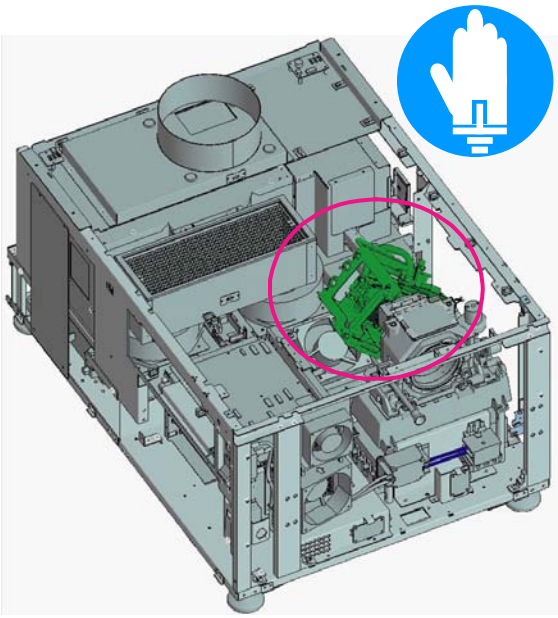

Too much application of glue screw lock can result in dripping into the inside. Therefore, attach it once to the harness bands and then apply it to the screw hole.

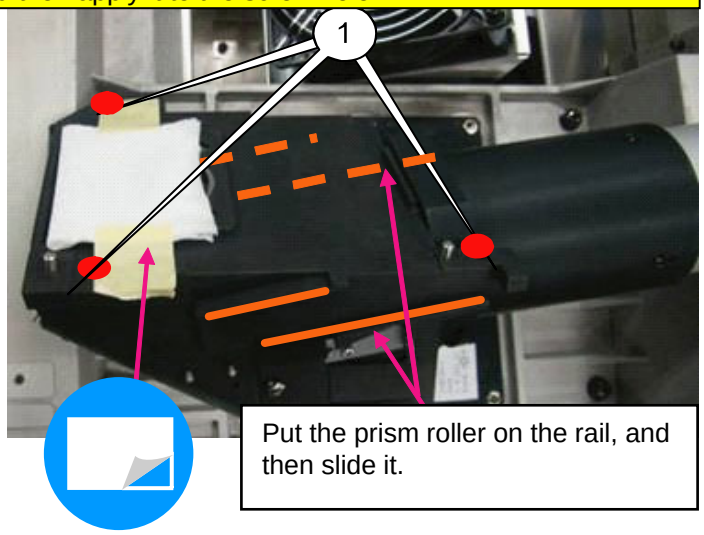

Put the prism roller on the rail, and then slide it.

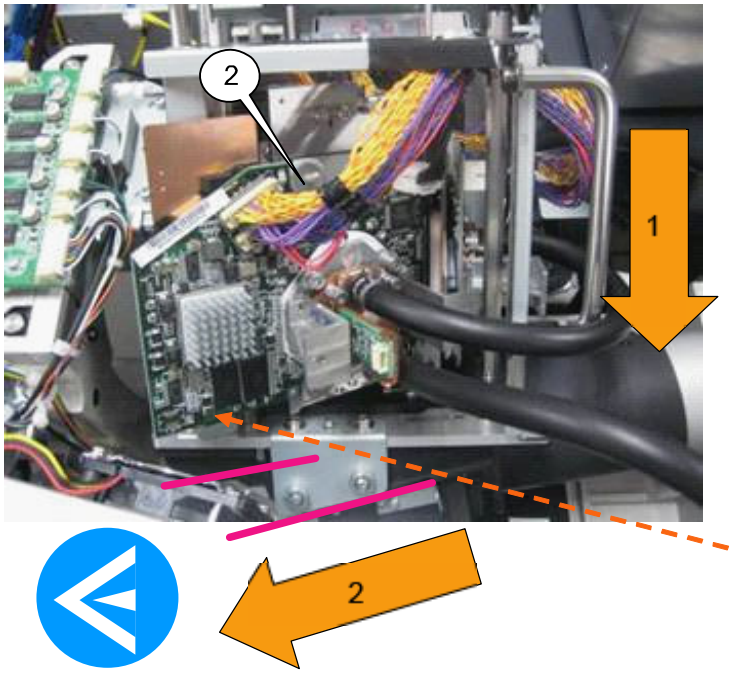

After installation, turn the shaft to fix it.

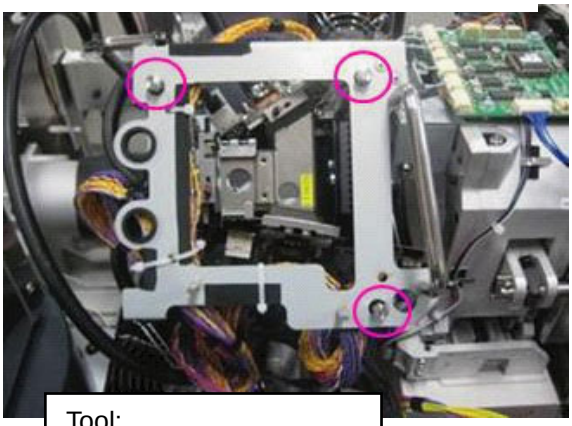

Tool:
OS 7mm box driver

Push it in thoroughly until the slide section comes in contact with the positioning pin.

119. SET SASSY

	Diagram symbol	Circuit symbol	Part name	Part number	Q'ty	Remarks

[1] Attach the Bracket (TI relay PWB) A of the Relay PWB and CN(PF) to the Mother PWB of the Case (TI) Sassy.
For installation, adjust the guide pin to the bracket (TI RELAY PWB) A and push it in until the lever comes along the bracket (TI RELAY PWB) A.

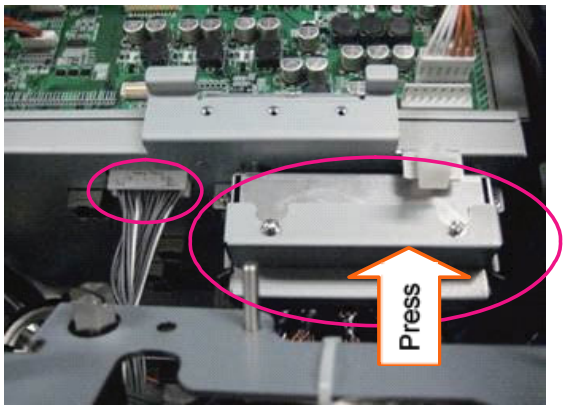

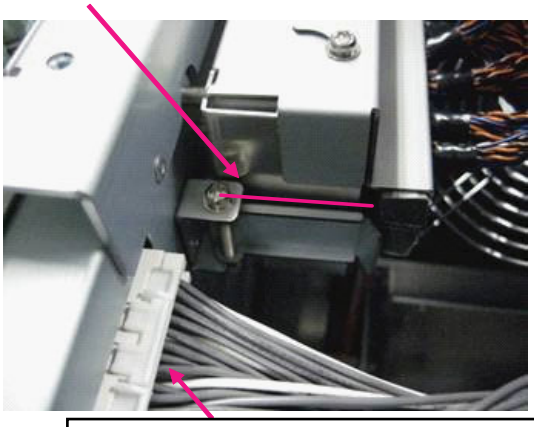

Check that CN(CN1) is locked certainly.

[2] Insert CN(CN1) to the TSENS PWB of FSB-B.

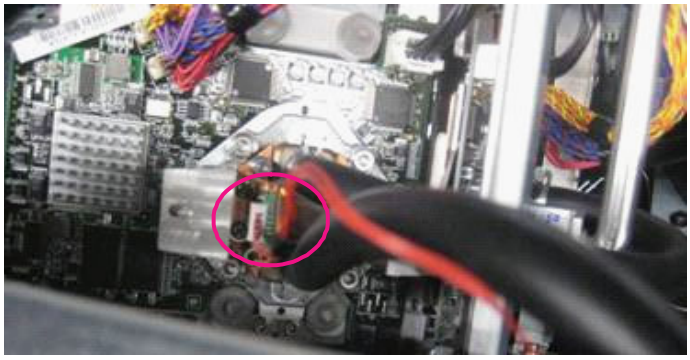

[3] Connect the liquid cooled tube of the prism Sassy to the water unit Sassy and fix the joint section with a band.

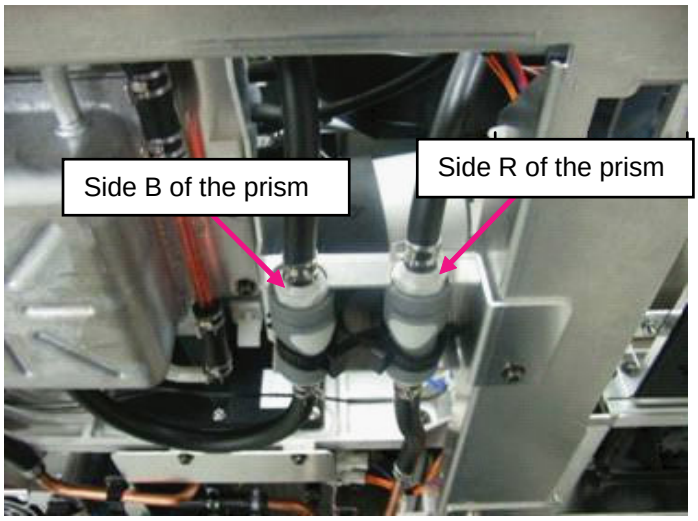

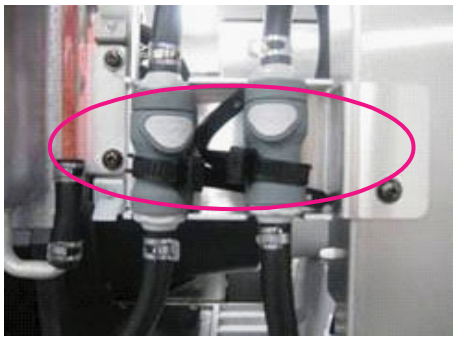

Fasten it at the narrow part of the joint section.

120. SET SASSY

	Diagram symbol	Circuit symbol	Part name	Part number	Q'ty	Remarks
	①		BASE(FAN)P ASSY	24HS4961	1	
	②	K84004	DCFAN 9G0824G105	3N170149	1	
	③	K84006	EDGE SADDLE	25281281	1	
	④	S84002	PL-CPIMS*4*50*3KF	24V00531	2	Torque management
	⑤	S84005	SPECIAL SCREW(HHCS*3*6*3G	24N05081	1	Torque management
	⑥	K60074	KNOB(KSM-25-M5-10)	24C09741	1	
	⑦	K60085	GLUE,SCREW LOCK	92201082		Amount used = approx. 0.02g×2 points
	⑧	K84007	SHEET(WASHER)	24J37461	1	

[1] Mount the DC fan, Edge saddle and Special screw (HHCS*3*6*3G) to the Base (fan) P Assy.

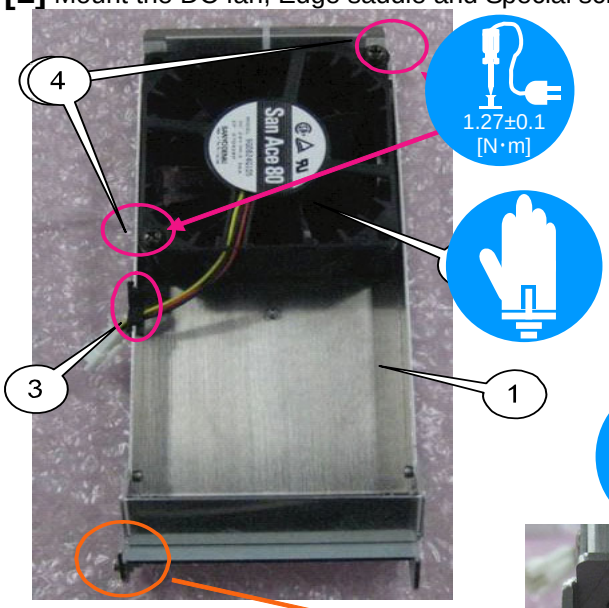

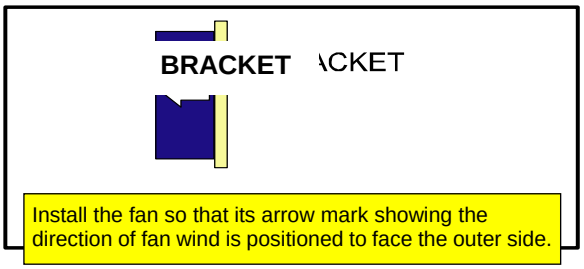

[2] Paste the Sheet (washer) to the Base (fan) P Assy.

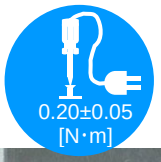

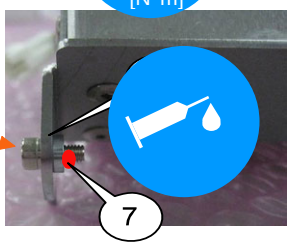

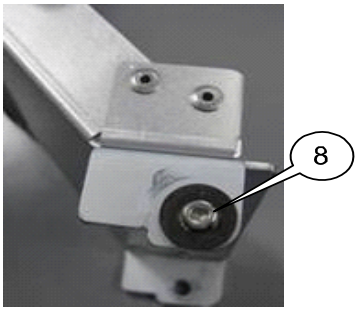

After the completion of screw fastening, apply glue screw lock.

[3] Mount the base (FAN)P Assy on the case (TI) Assy and tighten the knob by hands to a degree it does not come loose.
For installation, put a special screws in the hole of the case (TI) Assy and fix the opposite side with the knob.
Apply GLUE SCREW LOCK after fixing.
Connect the CN (CN5) to the fan cable.

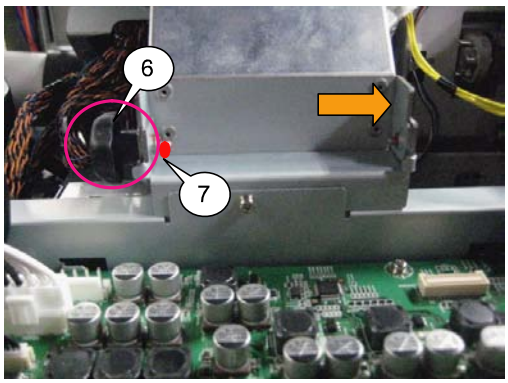

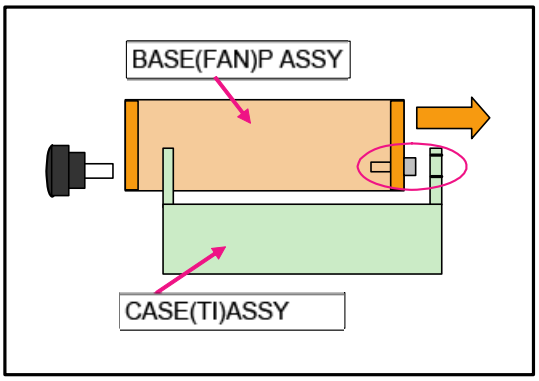

121. ROUTER UNIT SASSY

	Diagram symbol	Circuit symbol	Part name	Part number	Q'ty	Remarks
	①		FIXING BRACKET(HUB)A	24H67742	1	
	②		FIXING BRACKET(HUB)B	24H67751	1	
	③	K40003	CUSHION(T3*30*155)	24J37331	1	
	④	K40006	BROADBAND ROUTER ETG-RN	7N970091	1	
	⑤		WIRE SADDLE(C)	16287421	1	
	⑥	S40001	PL-CPIMS*4*10*3KF	24V00461	1	Torque management

[1] Stick the cushion (T3*30*155) to the router contact surface of the fixing bracket (HUB)B.

[2] Put the router on the fixing bracket (HUB)B that is attached with the edge saddle (EDS1717U).
Hang the fixing bracket (HUB)B on the right side of the fixing bracket (HUB)A and fix it while the router is pinched.
In regard to the router directions, refer to the illustration at right.

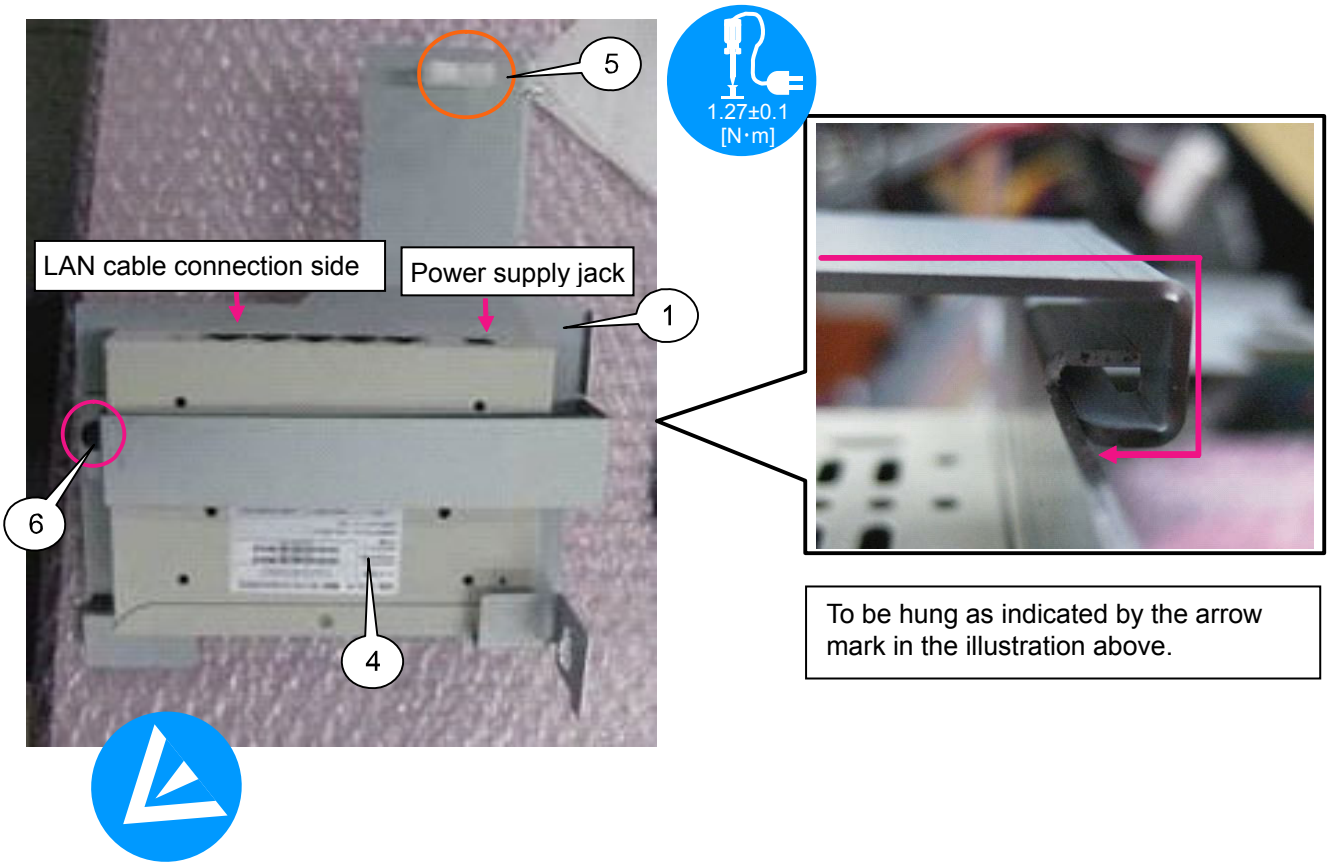

122. AC UNIT SASSY

	Diagram symbol	Circuit symbol	Part name	Part number	Q'ty	Remarks
	①		INTER PWB ASSY	81T19ZJ1	1	
	②	K60098	TERMINAL P7-2S	7N120015	2	
	③		FIXING BRACKET(AC IN)	24H67761	1	
	④	K42002	CABLE CLAMP(ACCD86AS)	24C09901	1	
	⑤	S42001	PL-CPIMS*3*8*3GF	24V00111	2	Torque management
	⑥	IL	CN4(IL)250W,1061-26	7NH4H006	1	
	⑦	K60083	CABLE CLIP(FCA-10)	24C02841	1	
	⑧	AC7	CN5P(AC7)240W 1015-18	7NA5W002	1	
	⑨	S42002	PL-CPIMS*3*8*3GF	24V00111	2	Torque management

[1] Mount the Interlock unit and Cable clamp (ACCD86AS) to the Fixing bracket (AC IN).

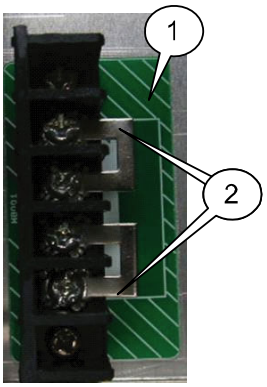

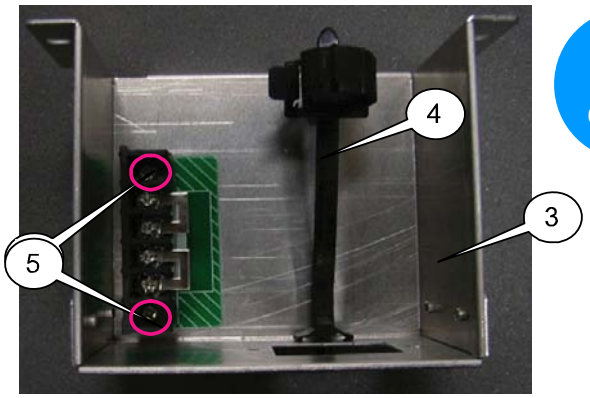

[2] Insert the CN(IL) in the Interlock unit.
Stick a cable clip and bundle the CN (IL) according to the dotted line indicated in the illustration.

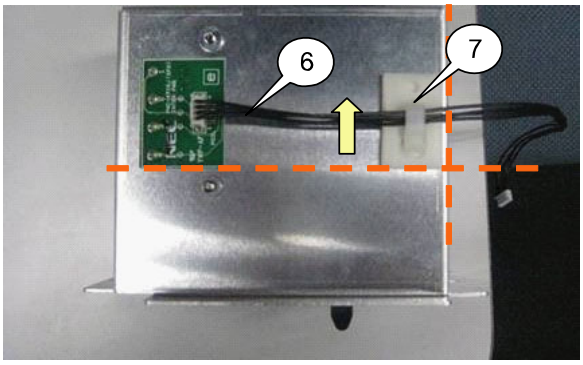

Secure the safety distance toward the primary side (noise filter).

[3] Mount the AC inlet of the CN(AC7) to the Fixing bracket (AC IN) assembled in the previous page.
Use a jig for assembly work.

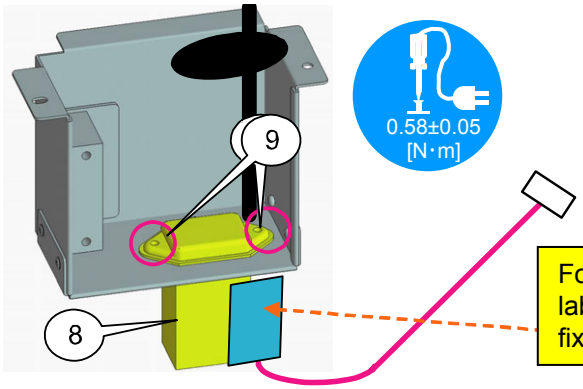

For the installation of the CN5P (AC7) 240W 1015-18, the label adhesion side is positioned on the open side of the fixing bracket (AC IN).

123. SHEET(LENS) SASSY

	Diagram symbol	Circuit symbol	Part name	Part number	Q'ty	Remarks
	①	K41005	SHIELDING SHEET(LENS)	24J24641	1	
	②	K41001	SHIELD PLATE(LENS)B	24H68351	1	
	③	K41004	SHIELD BOARD A	24H68361	1	
	④	K41002	HOLDER(SHIELD)A	24H56782	2	
	⑤	K41003	HOLDER(SHIELD)B	24H56791	2	
	⑥	S41001	SCREW,PL-CPIMS*3*8*3GF	24V00111	2	Torque management
	⑦	K61008	LABEL(LENS LOCK)	24L64421	1	

[1] Hang the shielding sheet (LENS) on the shield plate (LENS)B first. After that, hang the holder (SHIELD)A and the holder (SHIELD)B and fix them with screws.
Hang an idle shielding sheet (LENS) on the shield board A.
Similarly, hang the holder (SHIELD)A and the holder (SHIELD)B and fix them with screws.

[Shield Plate (LENS) B side]

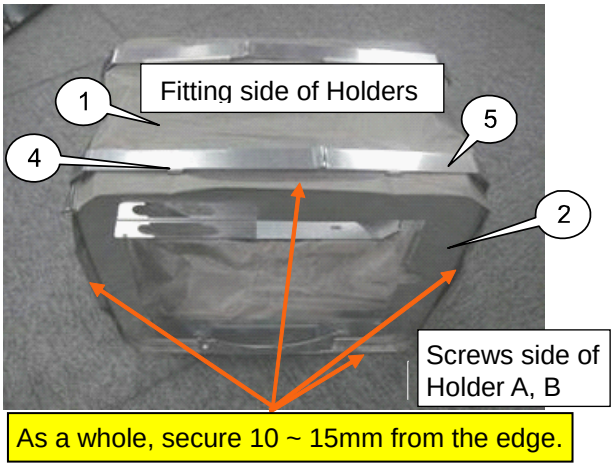

As a whole, secure 10 ~ 15mm from the edge.

In regard to the shielding sheet (LENS), confirm that the claws of the holder (SHIELD)A and the holder (SHIELD)B are assuredly holding the shielding sheet (LENS).

The Holder A, B fitting position and the screw position shall be aligned.
For installation, the screw position shall come to a lower level.

[Shield Board A side]

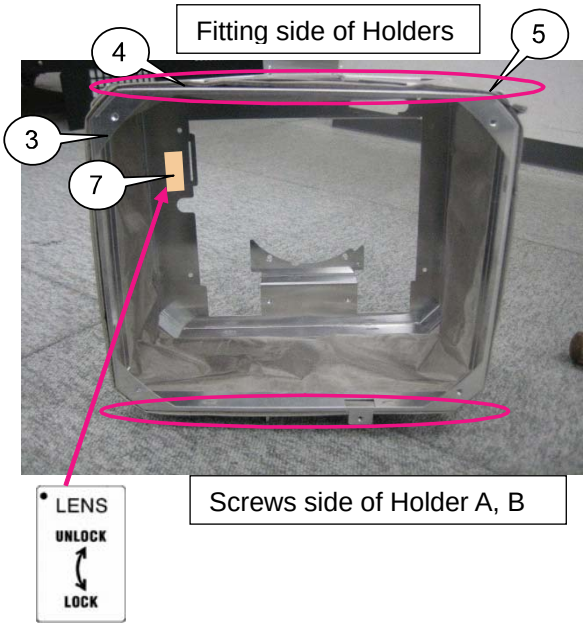

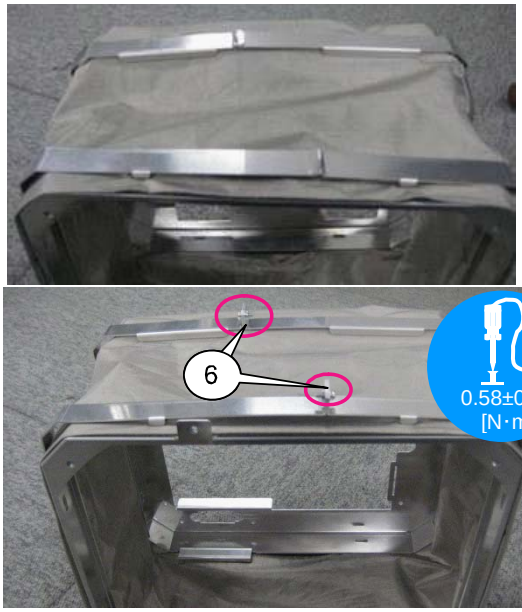

124. BASE(GLASS) SASSY

	Diagram symbol	Circuit symbol	Part name	Part number	Q'ty	Remarks
	①		BASE(GLASS) ASSY	24HS4352	1	
	②	K77003	UV GLASS(PA67)	12JT1791	1	
	③	K77002	HOLDING PLATE(UV GLASS)	24H60271	3	
	④	S77001	PL-CPIMS*3*8*3GF	24V00111	3	Torque management
	⑤	K77001	COVER(GLASS)	24H60171	1	
	⑥	S77002	PL-CPIMS*3*8*3GF	24V00111	3	Torque management

[1] Place the UV glass (PA67) and Holding plate (UV glass) on the Base (glass) Assy, and fix them with the screws.
Put the glass according to the three round bosses located inside.
During the assembly work, lay a cushion to facilitate assembly.

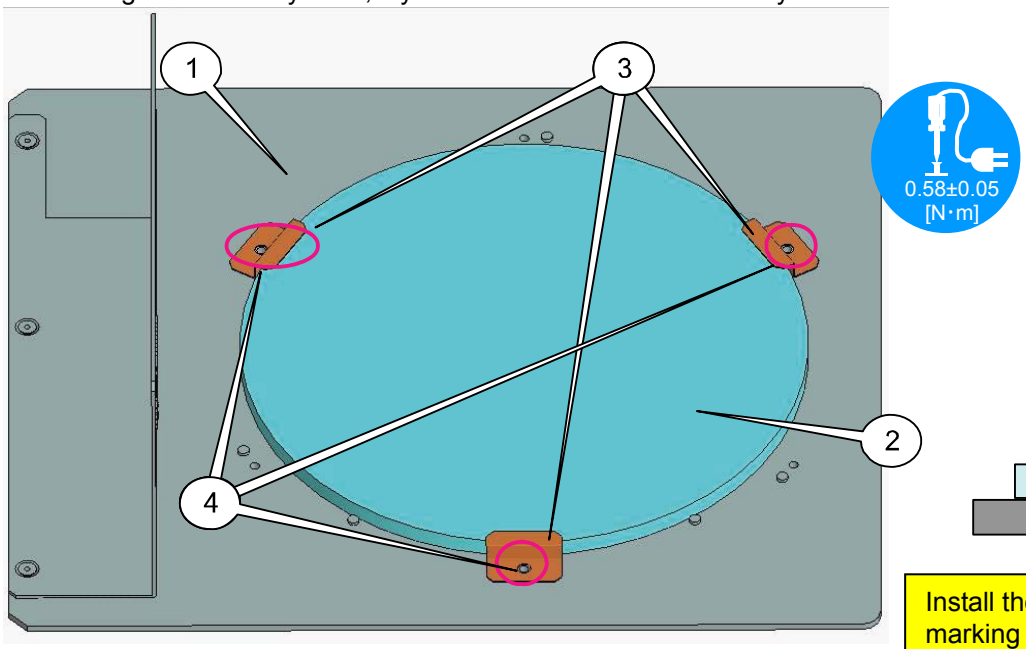

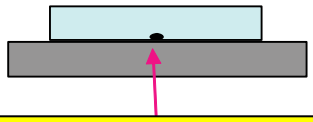

Install the UV glass with the marking side positioned to face the contact plane of the base.

[2] Mount the cover (glass).

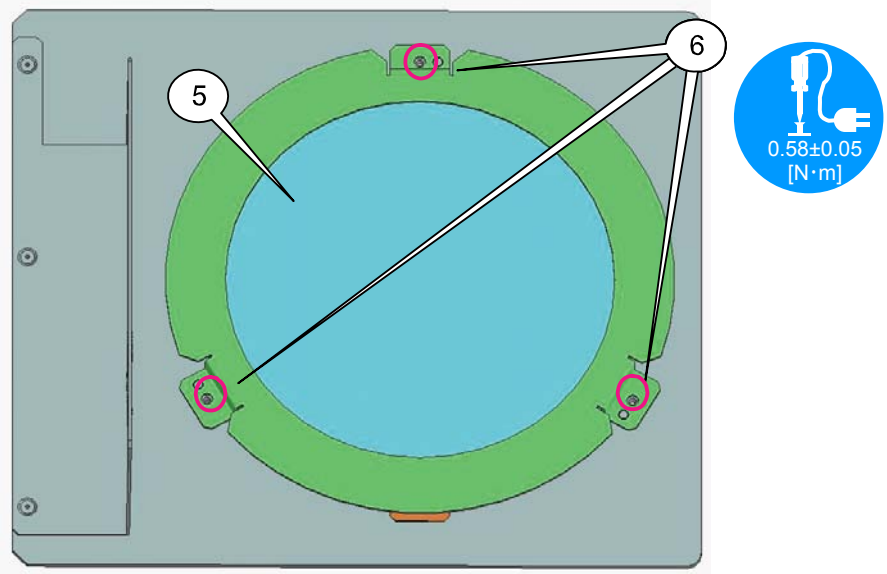

125. SET ASSY

	Diagram symbol	Circuit symbol	Part name	Part number	Q'ty	Remarks
	①	K55002	CABLE LAN JACK 0.70M	7N520076	1	
	②		PLATE(LAN)(SS)	24P06901	1	
	③	S60005	PL-CPIMS*4*10*3KF	24V00461	2	Torque management

[1] Mount the Cable LAN jack 0.70M to the Plate (LAN) (SS).

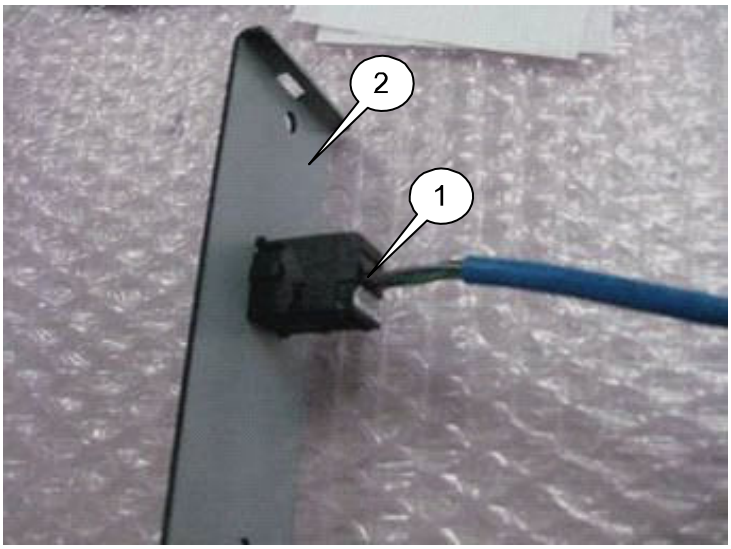

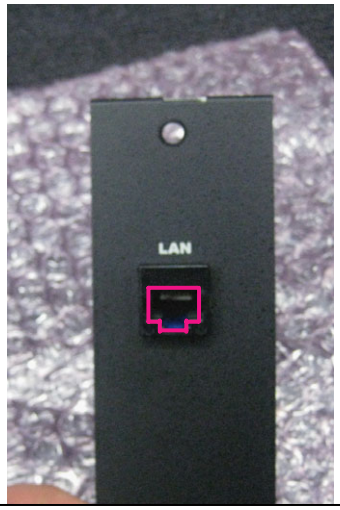

The jack terminal insertion port shall be positioned in the direction as illustrated above.

[2] Mount the Plate (LAN) assembled in the previous step to the Set Assy.

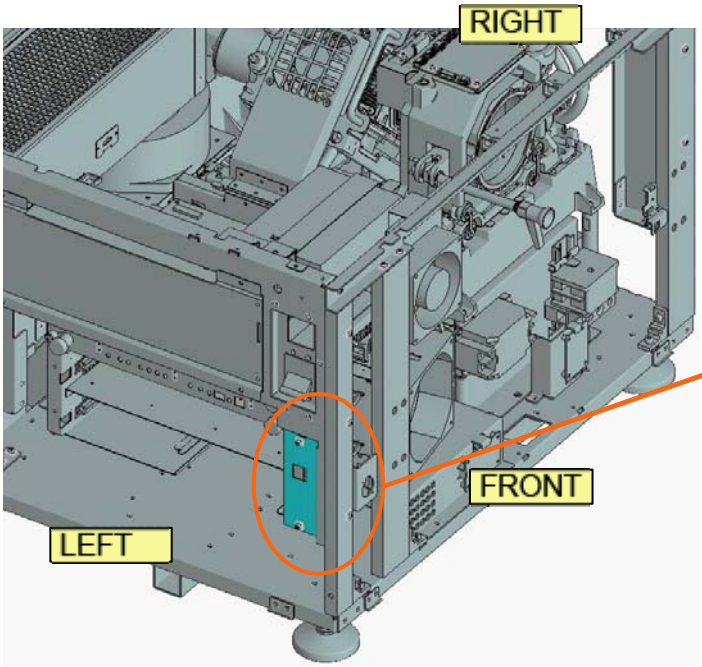

Insert the frame claws in the plate slit for positioning.

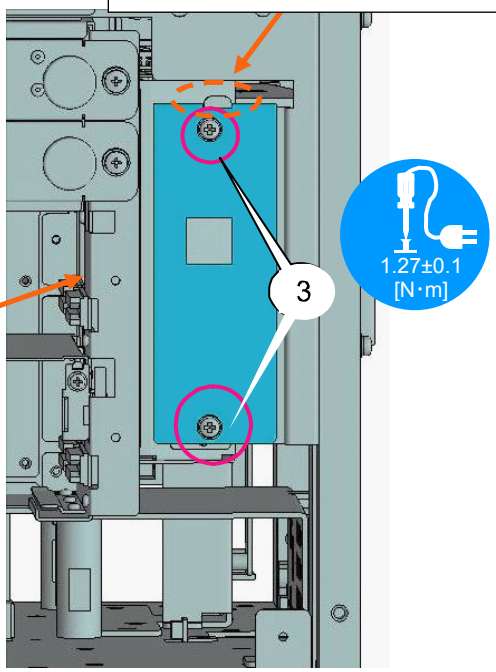

126. SET ASSY

	Diagram symbol	Circuit symbol	Part name	Part number	Q'ty	Remarks
	①		ROUTER UNIT SASSY		1	
	②	S60042	PL-CPIMS*4*10*3KF	24V00461	2	Torque management

[1] Mount the router Sassy to the Set Assy.
Push it in the direction of the arrow as illustrated below. Hang the claws on the frame for positioning.

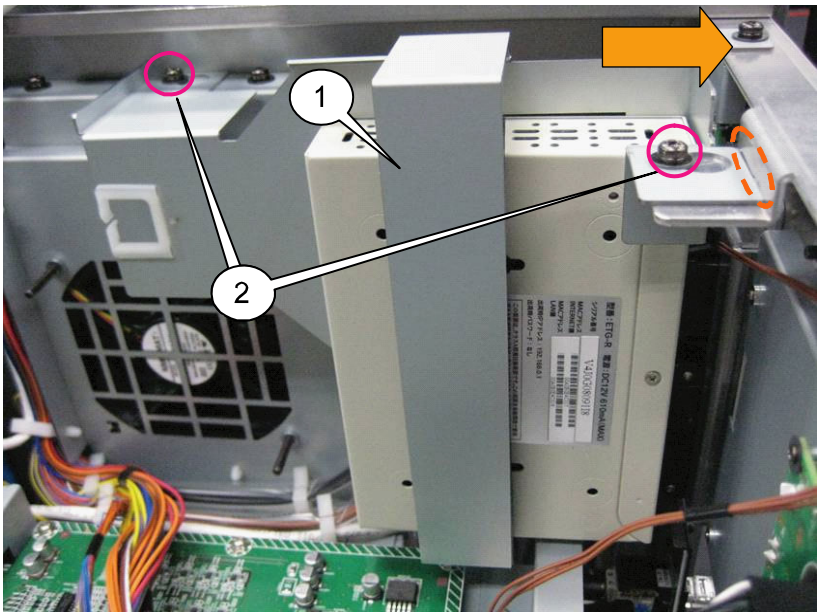

127. SET ASSY

	Diagram symbol	Circuit symbol	Part name	Part number	Q'ty	Remarks
	①	RO	CN2P(RO) 180W 1061-24	7NW2W063	1	
	②	K60095	CABLE LAN 0.70M (ACC)	7N520075	4	
	③	K40005	CORE E04SR200932	6N160006	1	Accessories: Harness bands
	④		Accessories: Harness bands		1	6N160006 accessories

[1] A LAN cable comes from the cable LAN jack 0.70M (ACC). Insert this cable in the “Internet” port of the router.

Install a core beneath the LAN connection area and fix it with accessory bands.
Insert the CN(RO) in the router to connect the CN(CN6).
Insert the Cable LAN 0.70M (ACC) to the Mother PWB of the Case (TI) Assy, and connect the router.
Position of insertion is not specified. After insertion, lay cables by means of edge saddles.

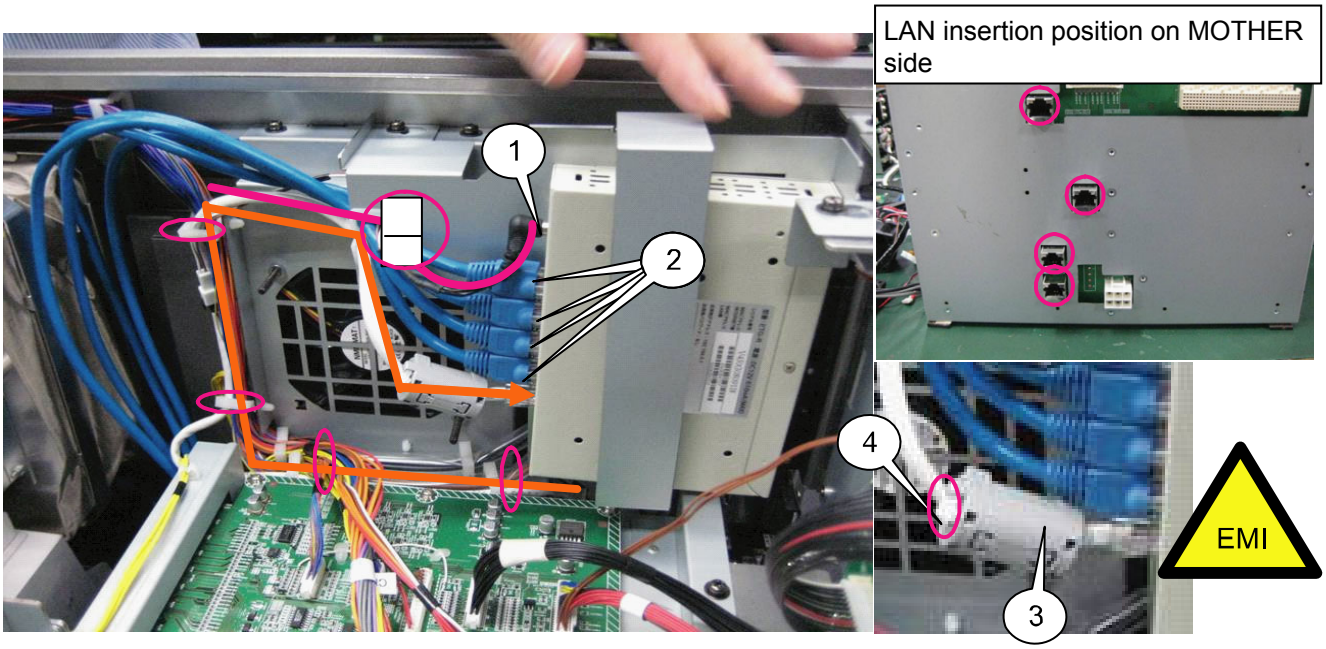

[2] Bundle the LAN cable with the Wire saddle (C) of the Case (TI) Sassy.

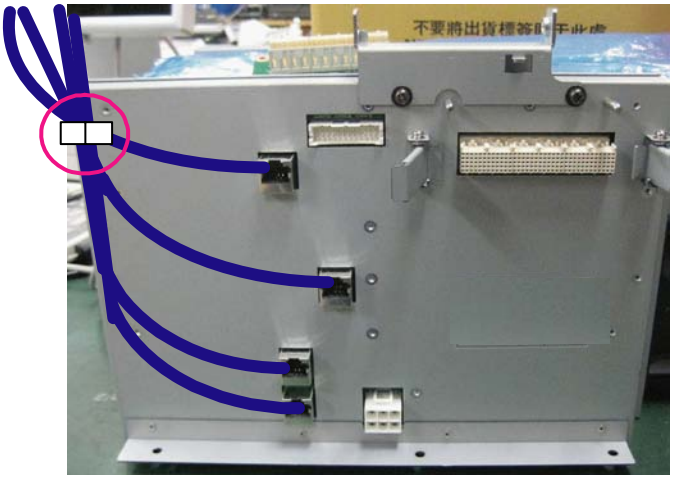

Secure the safety distance toward the primary side (noise filter).

128. SET ASSY

	Diagram symbol	Circuit symbol	Part name	Part number	Q'ty	Remarks
	①		ACIN UNIT SASSY		1	
	②	S60045	PL-CPIMS*4*10*3KF	24V00461	2	Torque management

[1] Mount the Inlet Assy assembled to the Set Assy.

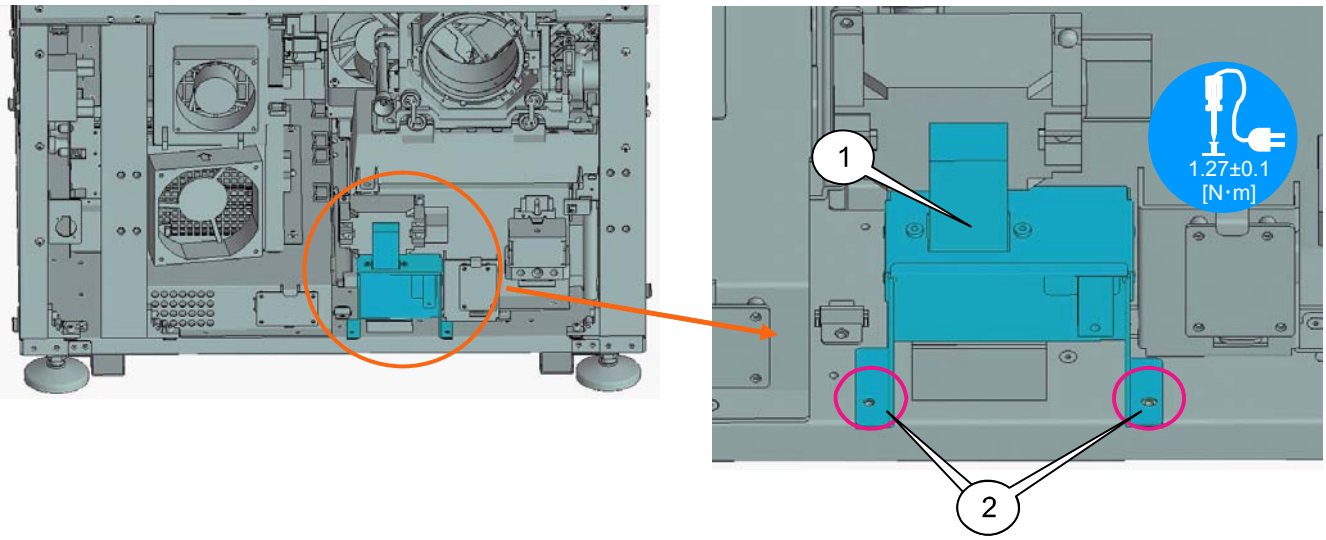

[2] Insert CN(IL) of the Inlet Assy in the PEDE-A PWB, and CN(AC7) in the ACS PWB.
Lay cables by means of wire saddles for the CN (IL) in the purple round section as illustrated below.

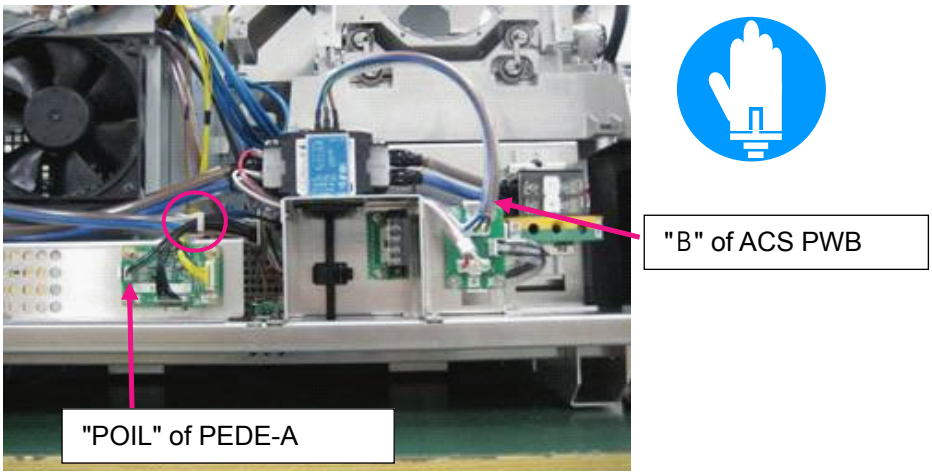

Secure the safety distance toward the primary side (noise filter).

129. SET ASSY

	Diagram symbol	Circuit symbol	Part name	Part number	Q'ty	Remarks
	①		DUCT(ROD CM FAN)	24H67601	1	
	②	S60019	PL-CPIMS*3*8*3GF	24V00111	4	Torque management
	③		SIDE PANEL RF(CABLE)ASSY	24PS5861	1	
	④	S60041	PL-CPIMS*4*10*3KF	24V00461	3	Torque management
	⑤		PLATE(45)	24P04891	1	
	⑥	S60004	PL-CPIMS*4*10*3KF	24V00461	4	Torque management

[1] Mount the Duct (ROD CM FAN) Sassy to the Set Assy.
At the time of installation, make sure not to pinch the cables that run beneath the fan.

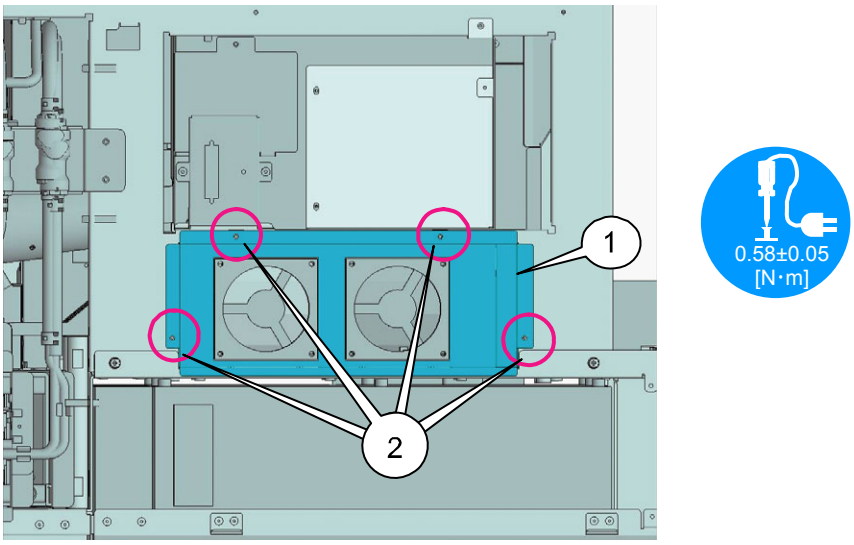

[1] Mount the Side panel RF(cable) Assy to the Set Assy.
Mount the Plate (45) to the Side panel RF (cable) Assy.

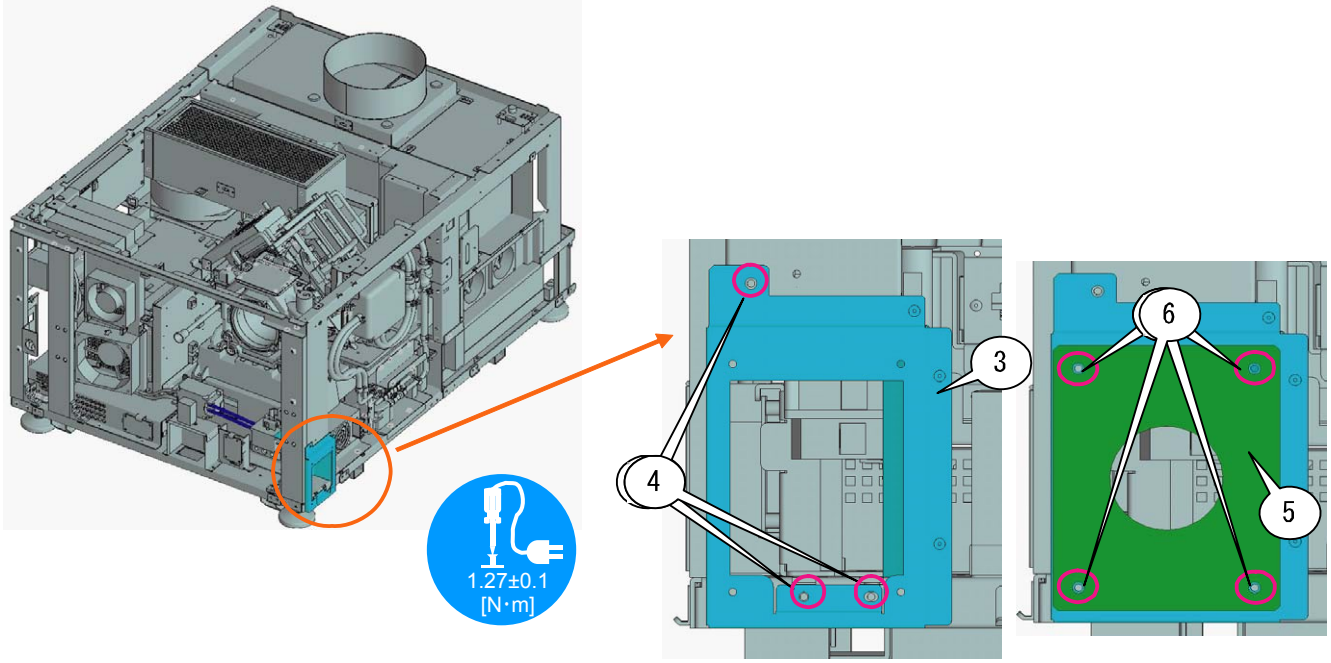

130. SET ASSY

	Diagram symbol	Circuit symbol	Part name	Part number	Q'ty	Remarks
	①		TOP PANEL R	24P06411	1	
	②		INDICATOR	24F45841	2	
	③	S63001	SCR(PPS M3*6)	24N08791	4	Torque management
	④	S60060	PL-CPIMS*4*10*3KF	24V00461	2	Torque management

[1] Mount the Indicators on the Top panel R from rear side of the panel.

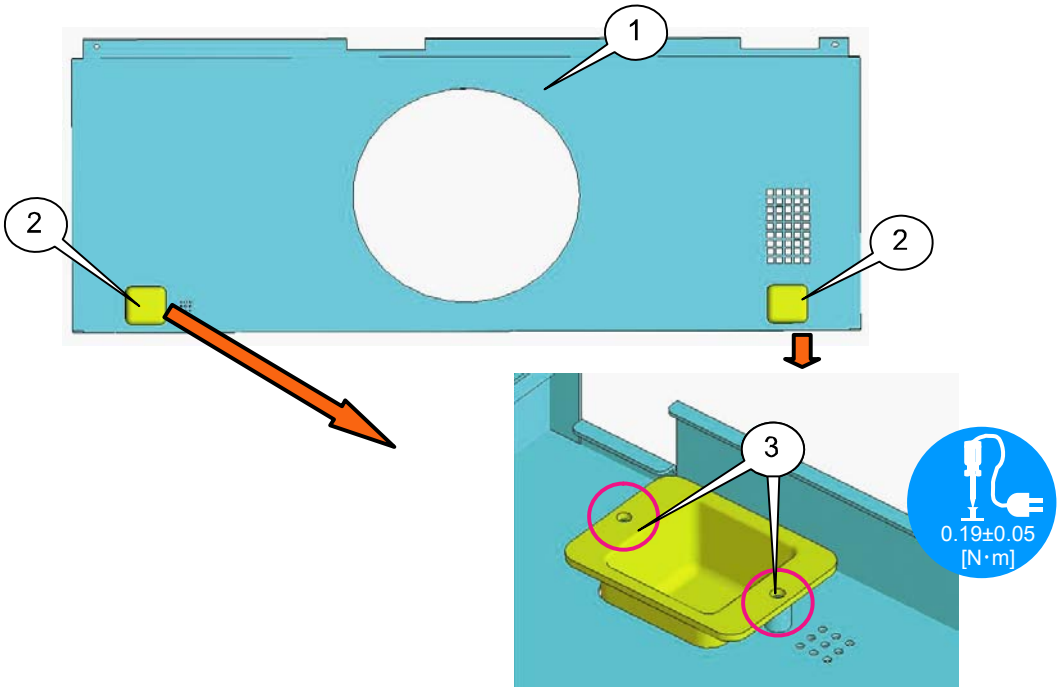

[2] Mount the Top panel R assembled in the previous step to the Set Assy.

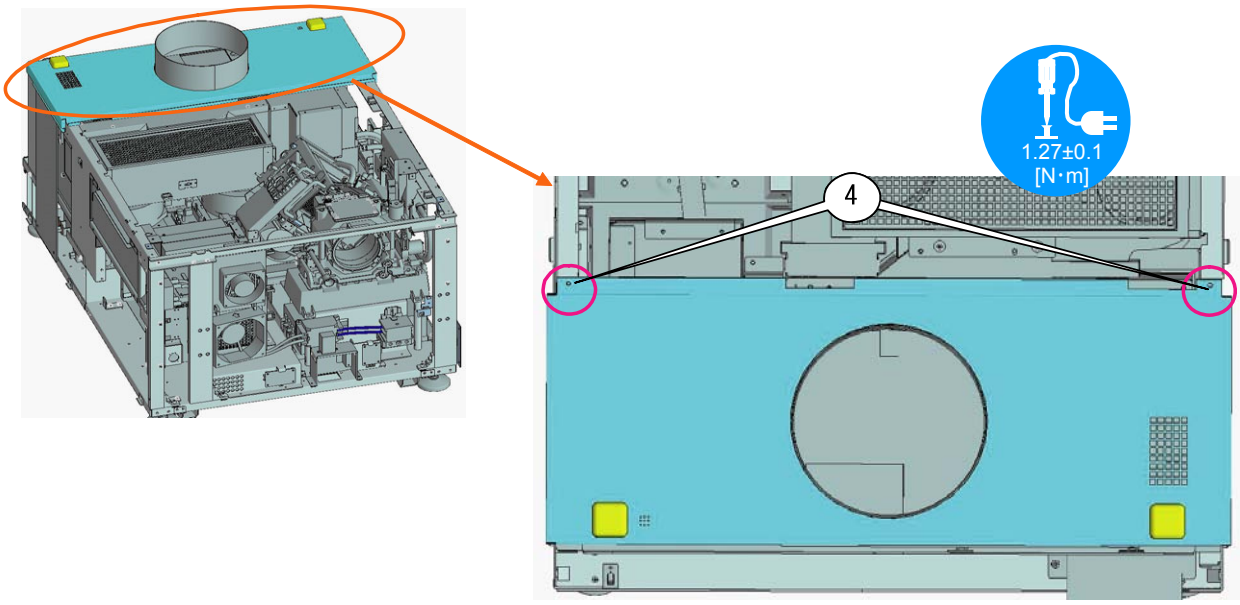

131. CPU PWB SASSY

	Diagram symbol	Circuit symbol	Part name	Part number	Q'ty	Remarks
	①	KCW003	HANDLE(GD-20)	24C09711	2	
	②	KCW001	PANEL(CPU)ASSY	24PS5921	1	
	③	SCW005	PL-CPIMS*4*10*3KF	24V00461	2	Torque management
	④	SCW004	SPECIAL SCREW(M4*14)	24N07492	2	Torque management

[1] Place the Handle (GD-20) on the jig, and place the Panel (CPU) Assy on the handle. Fix them with the screws.
After placing the Handle, fix the lever at the position shown in the illustration.

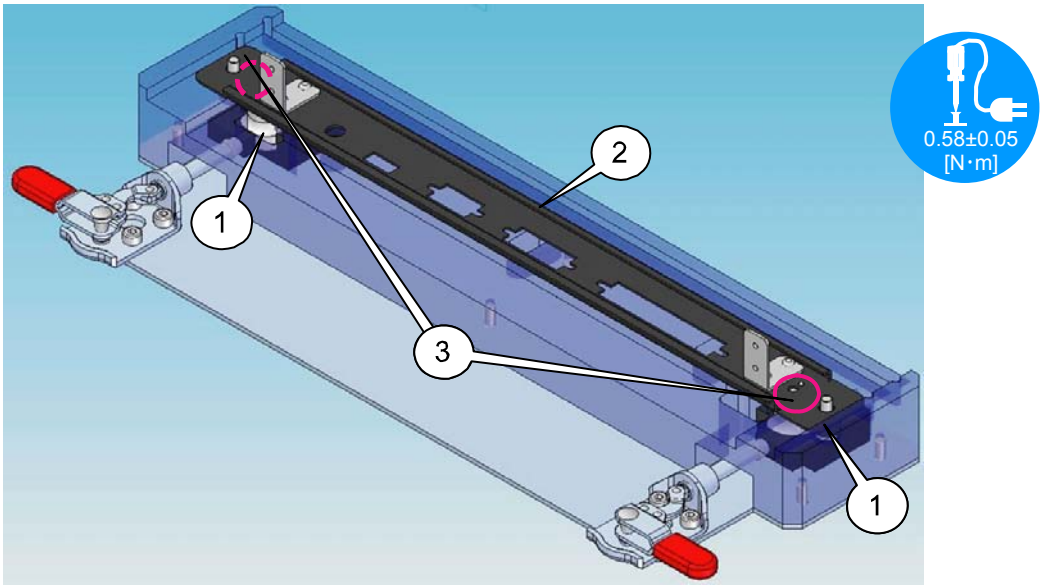

[2] Turn over the Panel (CPU) Assy, and mount the Special screw (M4*14).

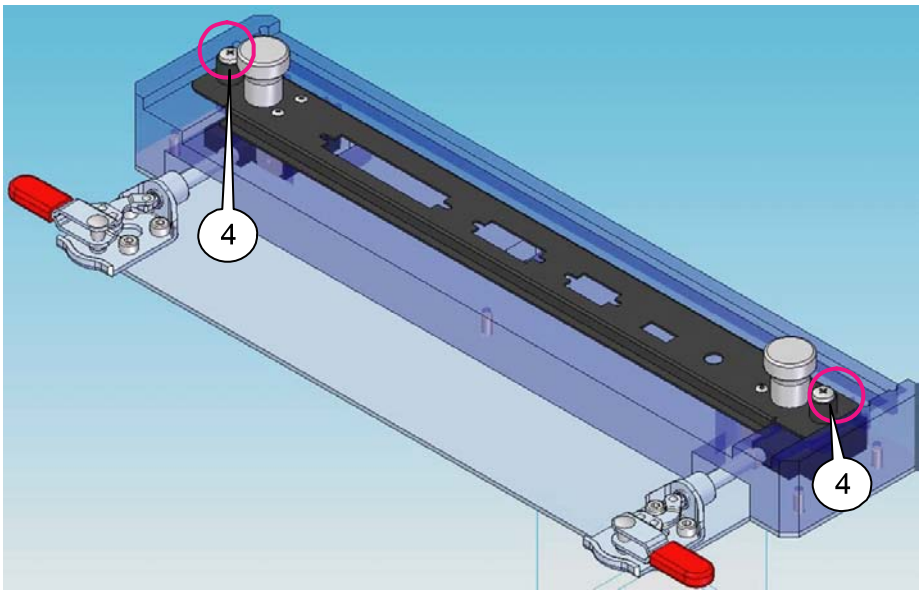

132. CPU PWB SASSY

	Diagram symbol	Circuit symbol	Part name	Part number	Q'ty	Remarks
	①	KCW008	FIXING BRACKET(CPU FAN)	24H67701	1	
	②	KCW007	DCFAN 2004KL	3N170153	1	
	③	SCW007	PL-CPIMS*3*15	24V00251	2	Torque management
	④	KCW006	EDGE SADDLE	25281281	1	
	⑤		CPU PWB ASSY	81T19C02	1	
	⑥	SCW006	SCREW,PL-CPIMS*3*8*3GF	24V00111	3	Torque management

[1] Place the DCFAN 2004KL on the Fixing bracket (CPU fan), and fix it with the screws.

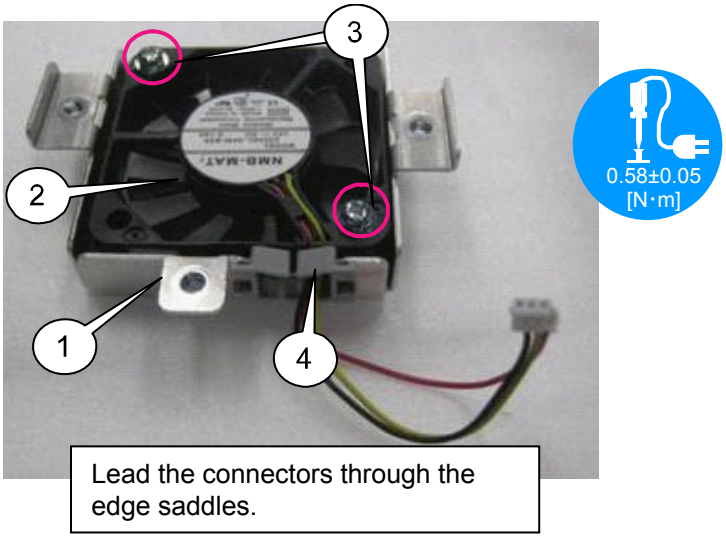

[2] Place the CPU PWB and assembled fan on the Panel (CPU) Assy, and fix the Bracket with the screws.

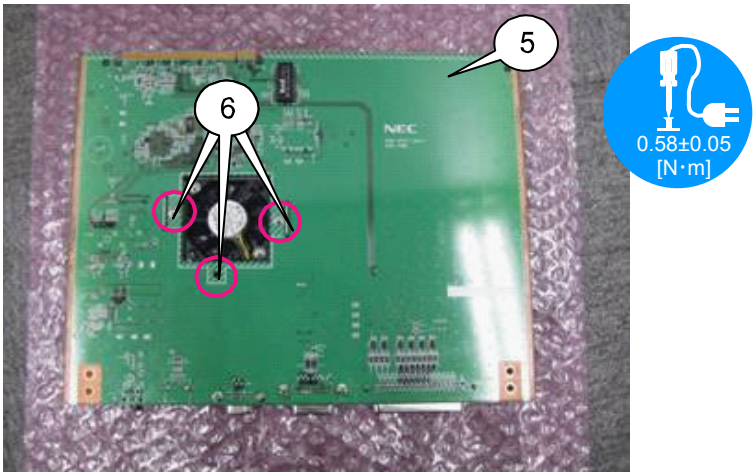

133. CPU PWB SASSY

	Diagram symbol	Circuit symbol	Part name	Part number	Q'ty	Remarks
	①	SCW002	STUD(D-SUB H*5.3)	24N08192	6	Torque management
	②	SCW003	SCREW,PL-CPIMS*3*8*3GF	24V00111	4	Torque management
	③	KCW002	GASKET(STG1-3 L=280)	24C09821	1	

[1] Tighten the Stud (D-SUB H*5.3), and fix the Panel (CPU) to the CPU PWB.
Turn over the CPU PWB Sassy after mounting, and connect the Fan cable to the CPU PWB.

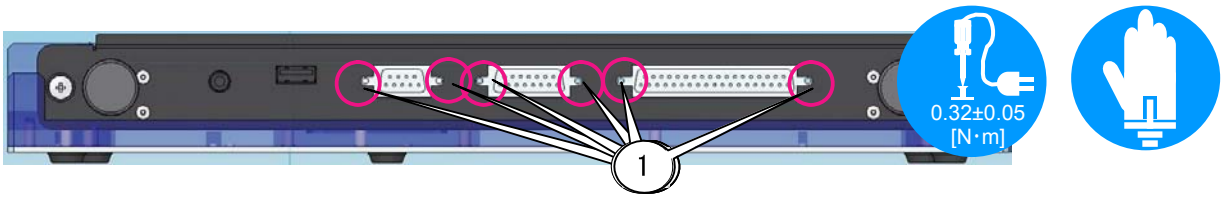

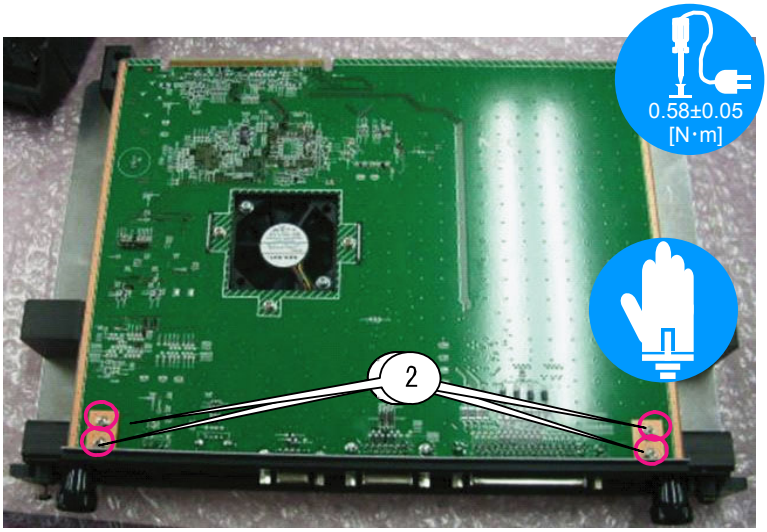

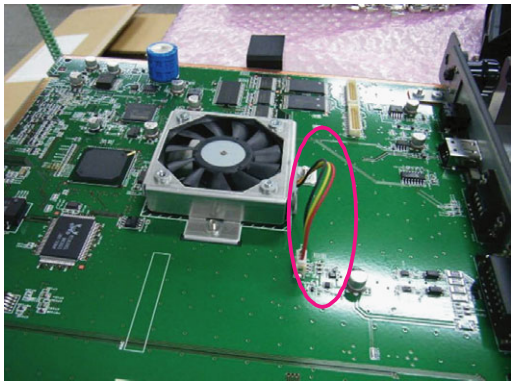

[2] Paste the gasket (STG1-3 L=280) to the panel (CPU) Assy.

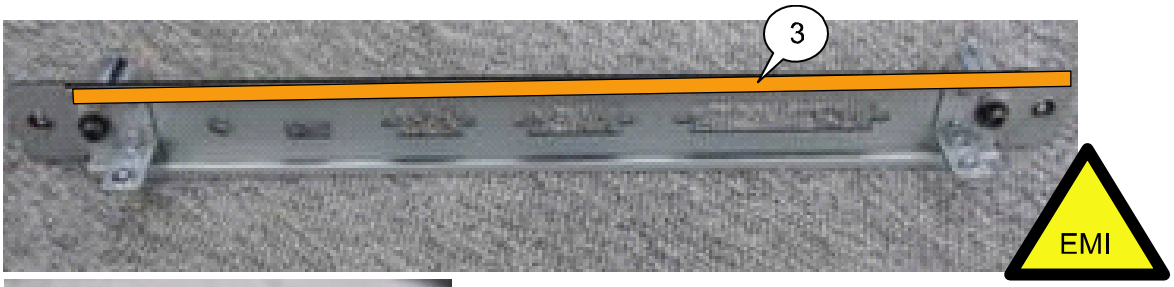

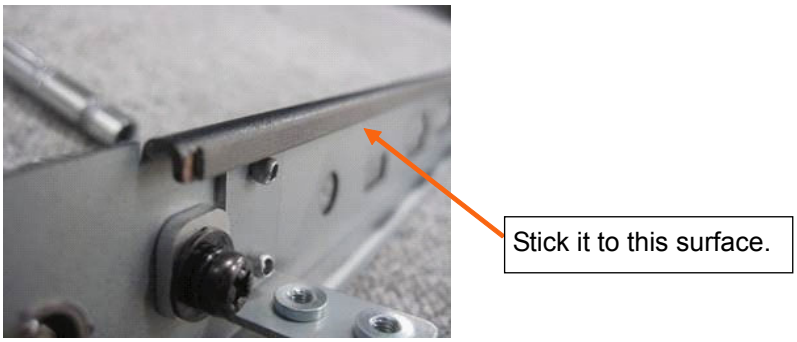

134. ICP PWB SASSY

	Diagram symbol	Circuit symbol	Part name	Part number	Q'ty	Remarks
	①	K73002	HANDLE(GD-20)	24C09711	2	
	②	K73001	PANEL(TI) ASSY	24PS5911	1	
	③	S73002	PL-CPIMS*4*10*3KF	24V00461	2	Torque management
	④	S73003	SPECIAL SCREW(M4*14)	24N07492	2	Torque management
	⑤		LABEL(ICP)	24L69461	1	

[1] Place the Handle (GD-20) on the jig, and place the Panel (TI) Assy on the handle. Fix them with the screws.
After placing the Handle, fix the lever at the position shown in the illustration.

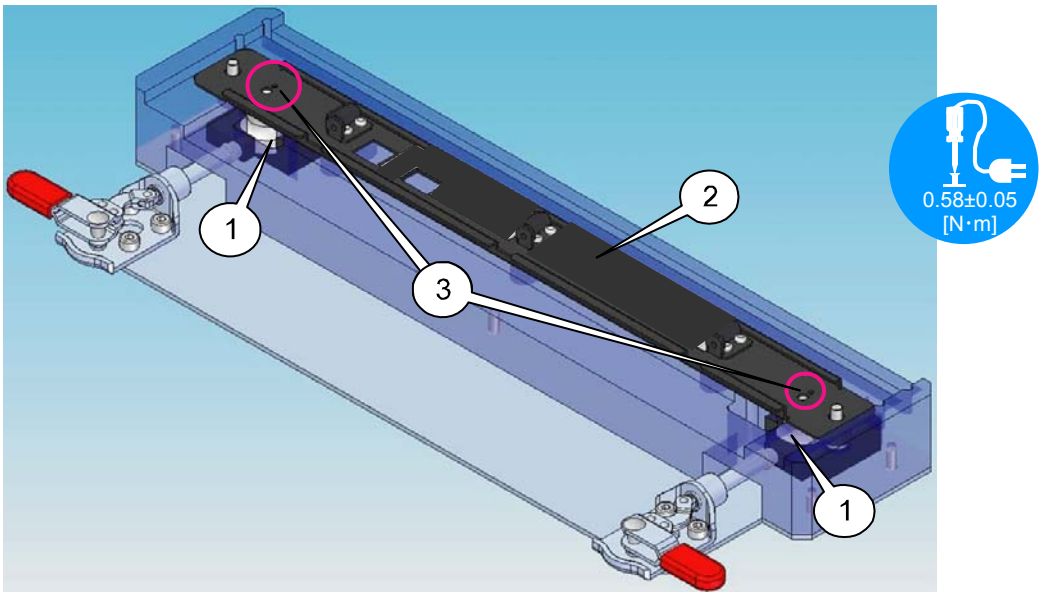

[2] Turn over the Panel (TI) Assy, and mount the Special screw (M4*14).
To conceal the USB hole, stick the label (ICP).

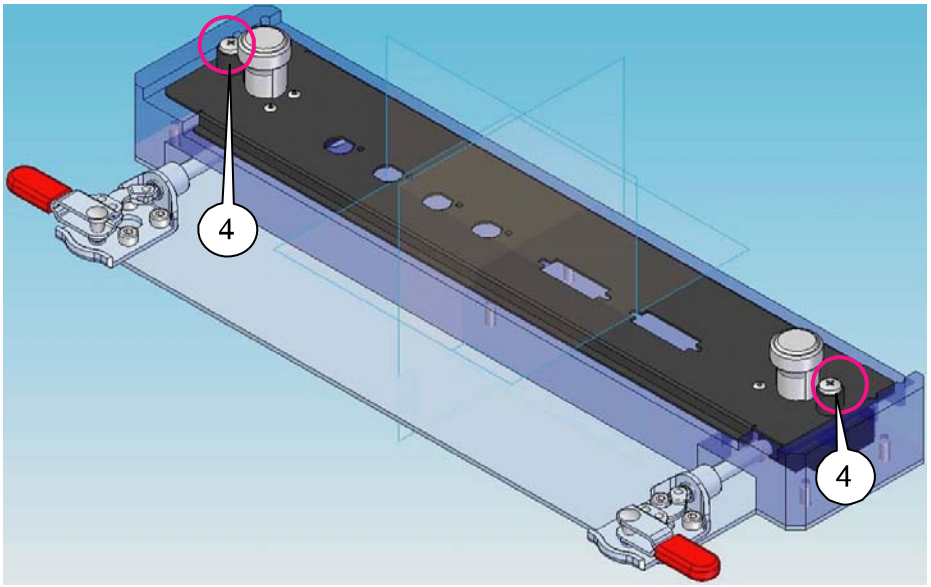

135. ICPPWB SASSY

	Diagram symbol	Circuit symbol	Part name	Part number	Q'ty	Remarks
	①	K73007	ICP 2509274-0004	7N951411	1	
	②	S73004	SCREW,PL-CPIMS*3*8*3GF	24V00111	3	Torque management
	③	K73003	GASKET(STG1-3 L=280)	24C09821	1	
	④		BARRIER(ICP)	24J37411	1	
	⑤		TAPE,SCOTCH SUPER10	92203961	30mm	

[1] Place the Panel (TI) Assy on the assembling jig, and place the ICP PWB on the Panel (TI) Assy.
Put the barrier (ICP) on the ICP PWB and tighten it together with the screws at both ends.
Handle the ICP PWB with utmost care in order not to permit any continuity around the location indicated by a circle in the photo at bottom left.

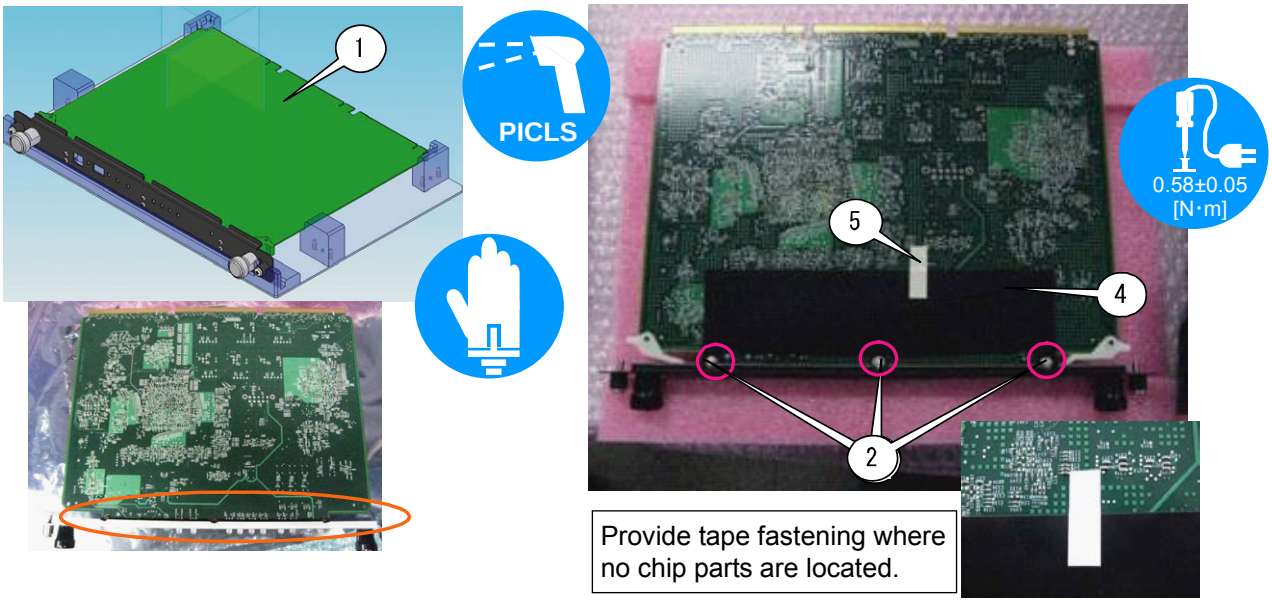

[2] Paste the gasket (STG1-3 L=280) to the panel (TI) Assy.

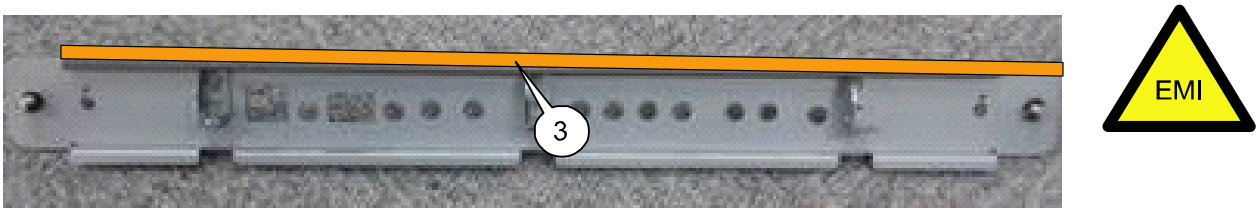

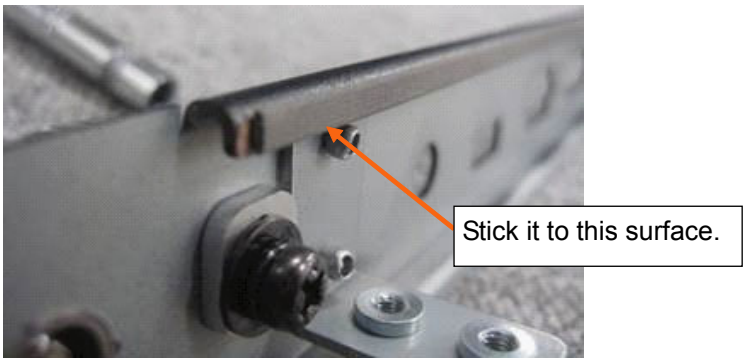

136. LEGACY PWB SASSY

	Diagram symbol	Circuit symbol	Part name	Part number	Q'ty	Remarks
	①	KLW002	HANDLE(GD-20)	24C09711	2	
	②	KLW001	PANEL(LEGACY)ASSY	24PS5901	1	
	③	SLW004	PL-CPIMS*4*10*3KF	24V00461	2	Torque management
	④	SLW003	SPECIAL SCREW(M4*14)	24N07492	2	Torque management

[1] Place the Handle (GD-20) on the jig, and place the Panel (LEGACY) Assy on the handle. Fix them with the screws.
After placing the Handle, fix the lever at the position shown in the illustration.

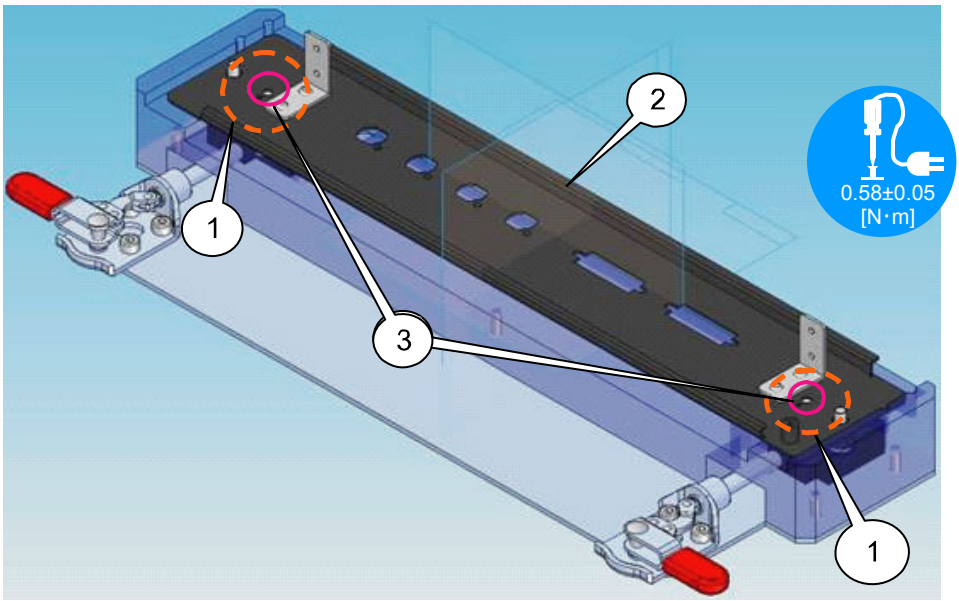

[2] Turn over the Panel (LEGACY) Assy, and mount the Special screw (M4*14).

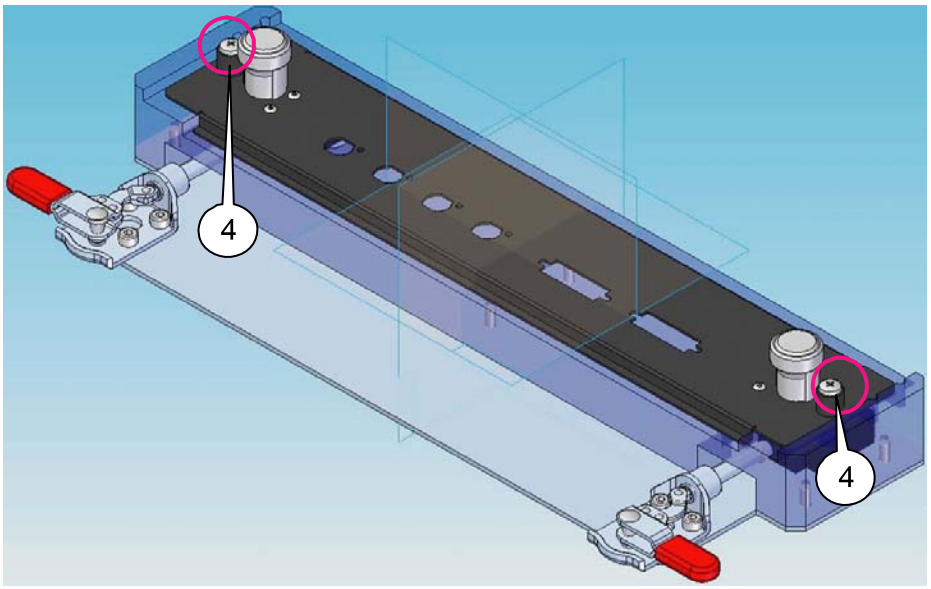

137. LEGACY PWB SASSY

	Diagram symbol	Circuit symbol	Part name	Part number	Q'ty	Remarks
	①	SLW007	NUT(UNT-26)	24C09941	4	Torque management
	②		LEGACY PWB PWB ASSY	81T19L01	1	
	③	KLW007	SPACER(BSF-2616E)	24C09911	4	Torque management

[1] Put the nut (UNT-26) in the assembly jig (purple circle illustrated below) and mount the Legacy PWB PWB ASSY from above.

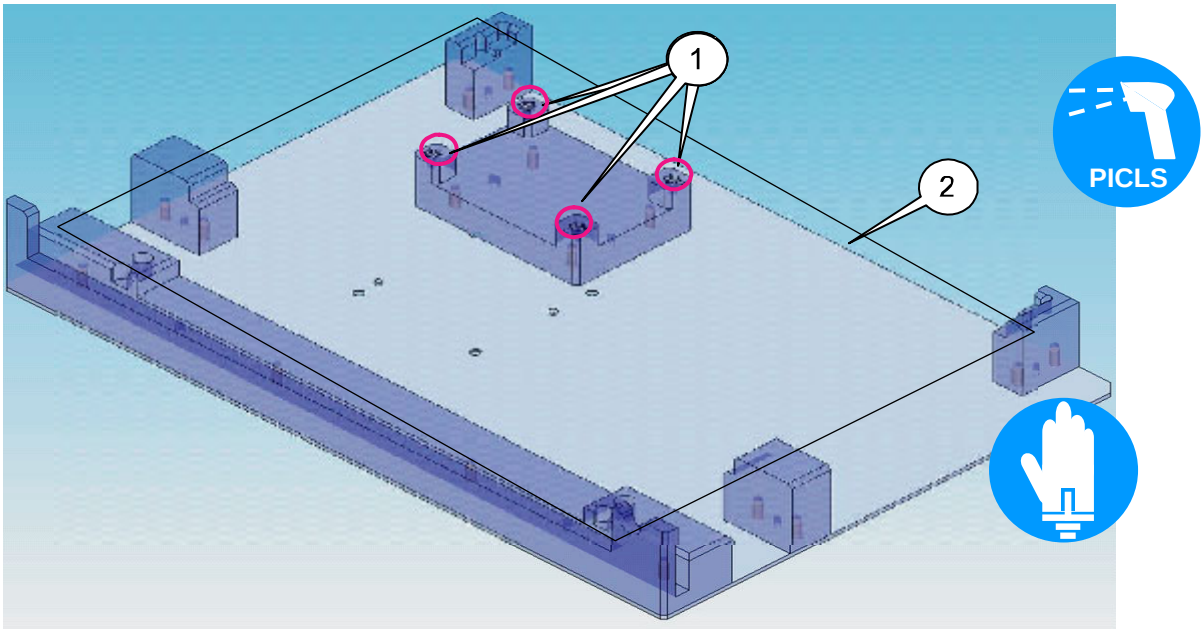

[2] Mount the spacer (BSF-2616E) based on the location where the nut (UNT-26) has been placed.

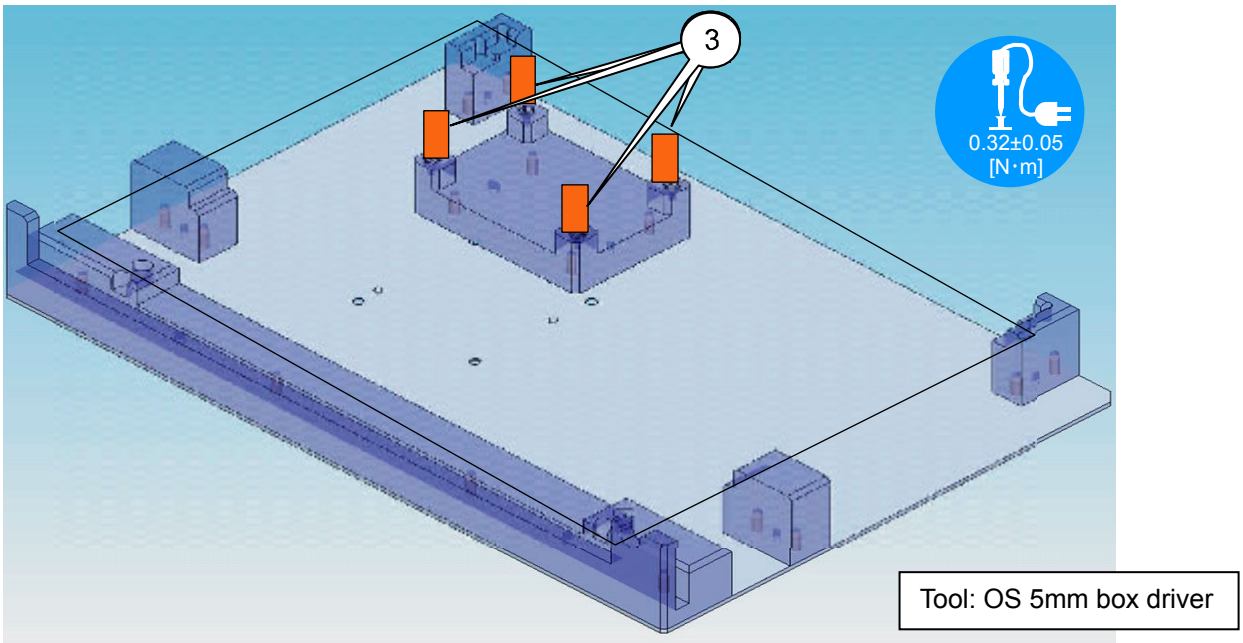

138. LEGACY PWB SASSY

	Diagram symbol	Circuit symbol	Part name	Part number	Q'ty	Remarks
	①	KLW009	ENIGMA 2509488-0002	7N951421	1	
	②		SERIAL LABEL	16761791	1	

[1] Put the Enigma PWB on the base.

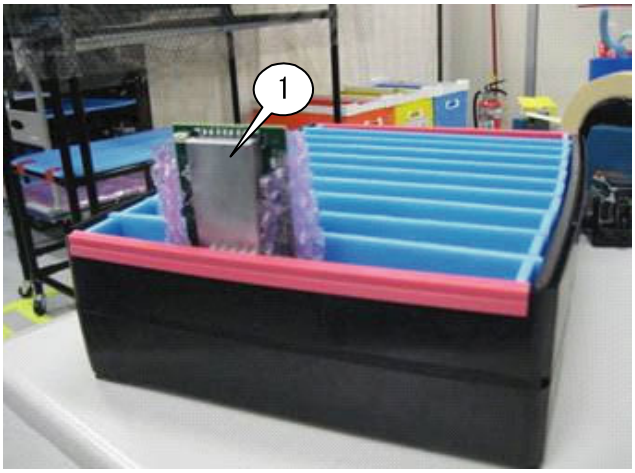

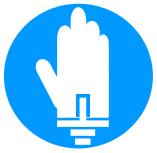

[2] Connect the connector of the charger facility to the Enigma PWB and maintain charging for 15 hours.
After the completion of 15-hour charging for the Enigma PWB, stick a serial label (16761791) to the heat sink section, where the date of charge (example: SSS 2009/12/1) is recorded.
When the set is turned on, the charge date label stuck to the connector shall be stuck to the historic sheet.

* There is no problem even after a long time of operation if the Enigma PWB is charged for more than 15 hours.
* After the completion of 15 hours of charging for the Enigma PWB, the set has to be turned on within ten days.
After the lapse of more than ten days after charging, re-charging is required before turning the set on.

DC power facility: DC10V 1A SMR-3 with a charger connector
Supply voltage: 4.5V±0.5V
Supply time: 15H

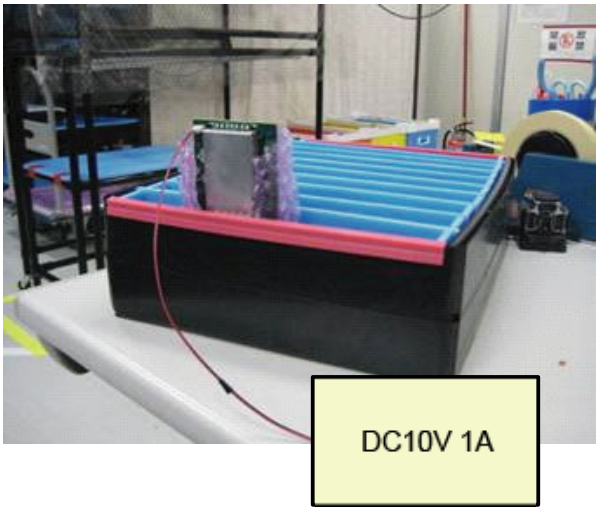

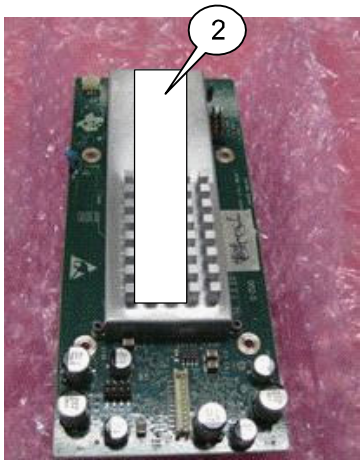

139. LEGACY PWB SASSY

	Diagram symbol	Circuit symbol	Part name	Part number	Q'ty	Remarks
	①	SLW008	SL-CPIMS*2.5*6*3GF	24V01361	4	Torque management
	②	SLW006	STUD(D-SUB H*5.3)	24N08192	4	Torque management
	③	SLW005	SL-CPIMS*2.5*6*3GF	24V01361	4	Torque management
	④	SLW002	SCREW,PL-CPIMS*3*8*3GF	24V00111	4	Torque management

[1] Mount the ENIGMA 2509488-000X on the Legacy PWB, and fix it with the screws.
Insert the ENIGMA PWB in the Connector of the Legacy PWB, and fix it with the screws.
Install the Enigma PWB for which charging has been finished.
Handle the Enigma PWB with care not to permit any continuity.

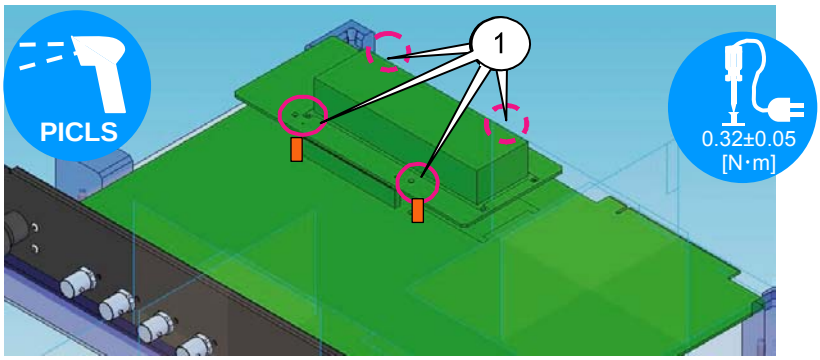

Install the Enigma PWB in the direction as illustrated below.

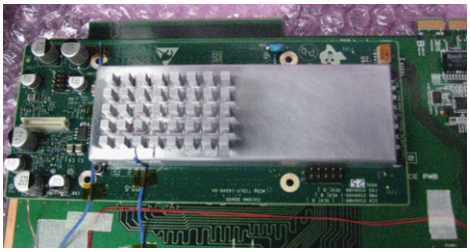

[2] Mount the Panel (legacy) Assy to the Legacy PWB Assy.

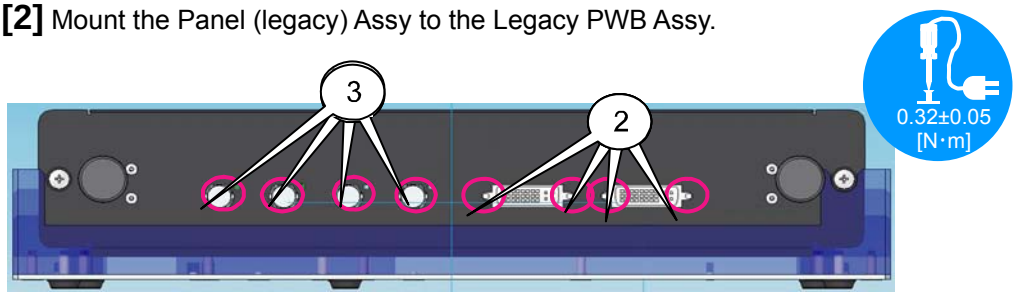

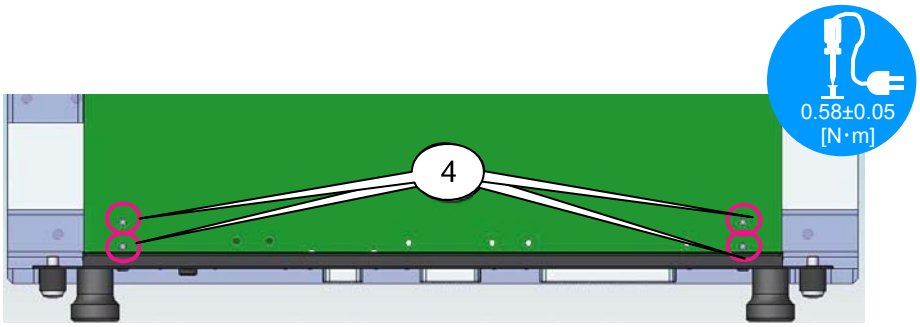

140. LEGACY PWB SASSY

	Diagram symbol	Circuit symbol	Part name	Part number	Q'ty	Remarks
	①	KLW005	GASKET(STG1-3 L=280)	24C09821	1	

[1] Paste the gasket (STG1-3 L=280) to the panel (TI) Assy.

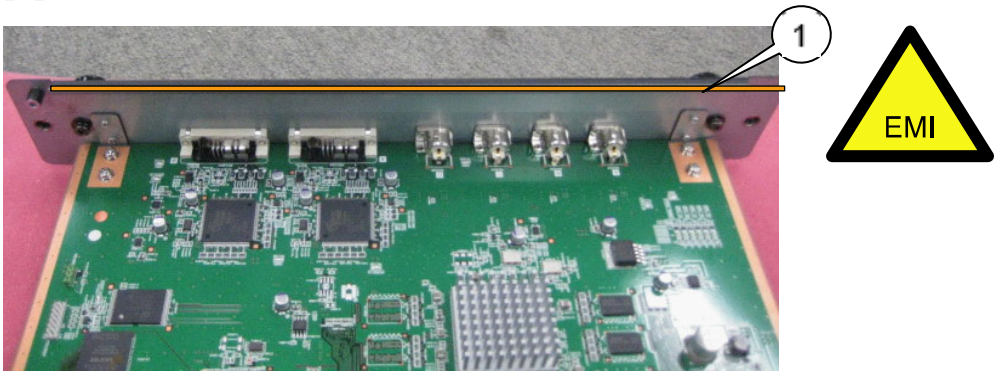

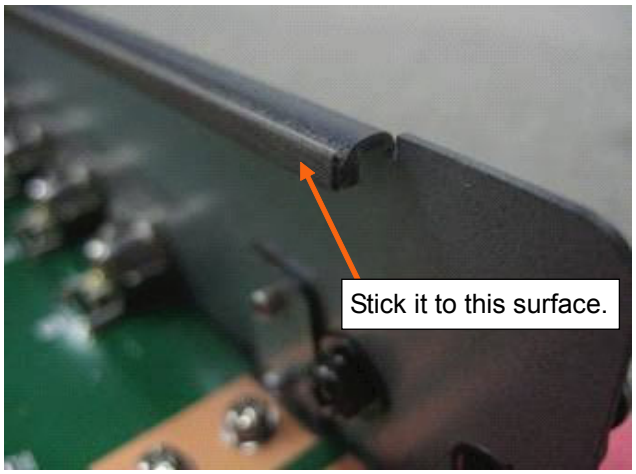

141. SET ASSY

	Diagram symbol	Circuit symbol	Part name	Part number	Q'ty	Remarks
	①		CPU PWB SASSY		1	
	②		ICP PWB SASSY		1	
	③		LEGACY PWB SASSY		1	
	④		LABEL(SLOT)	24L69451	1	

[1] Mount the CPU, ICP and Legacy PWB Assy to the Case (TI) Assy.
The mounting order is CPU → ICP → Legacy.

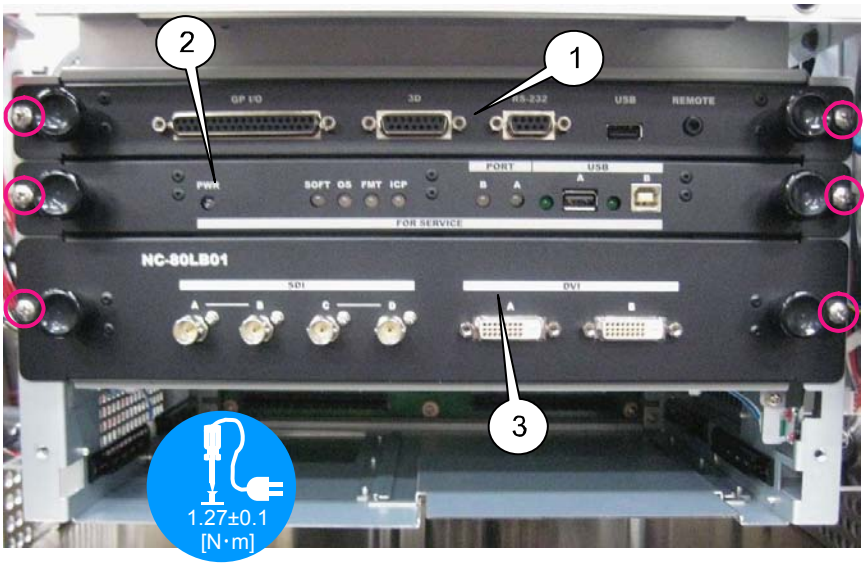

[2] Stick the label (SLOT).
Adhesion shall be based on the step shown in the illustration.

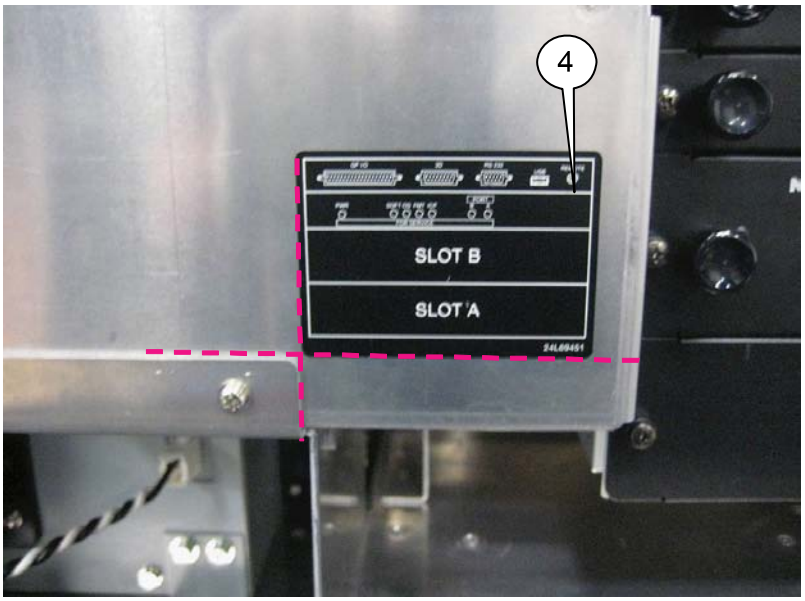

142. SET ASSY

	Diagram symbol	Circuit symbol	Part name	Part number	Q'ty	Remarks
	①		BASE(GLASS) SASSY		1	
	②		LAMP COVER F ASSY	24HS4282	1	
	③	S60038	SPECIAL SCREW(M4*14)	24N07492	4	Torque management

[1] Slide and mount the Base (glass) Sassy to the anode side of the Lamp cover S Sassy.

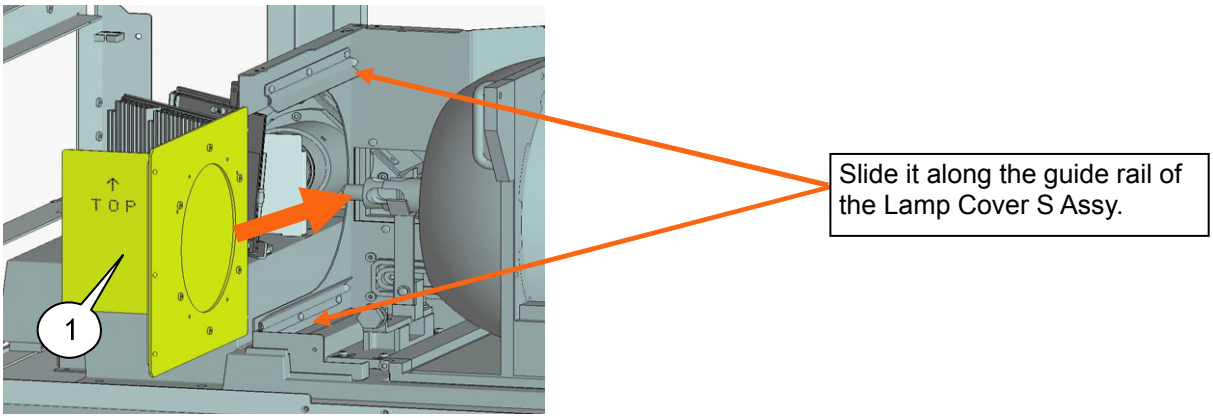

[2] Mount the Special screw (M4*14) to the Lamp cover F Assy.

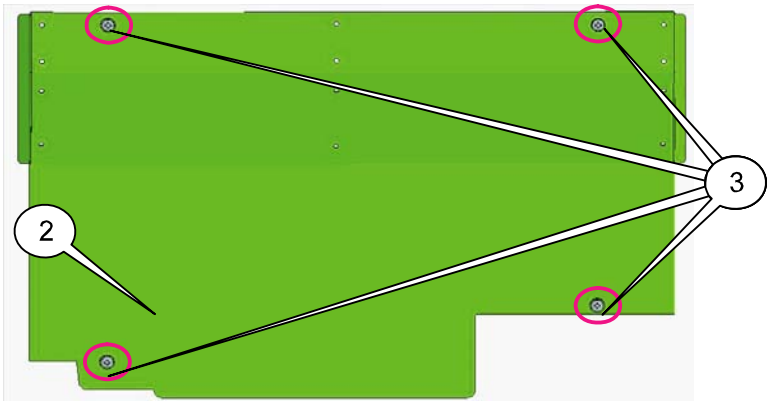

[3] Mount the Lamp cover F Sassy assembled in the previous step to the Set Assy.

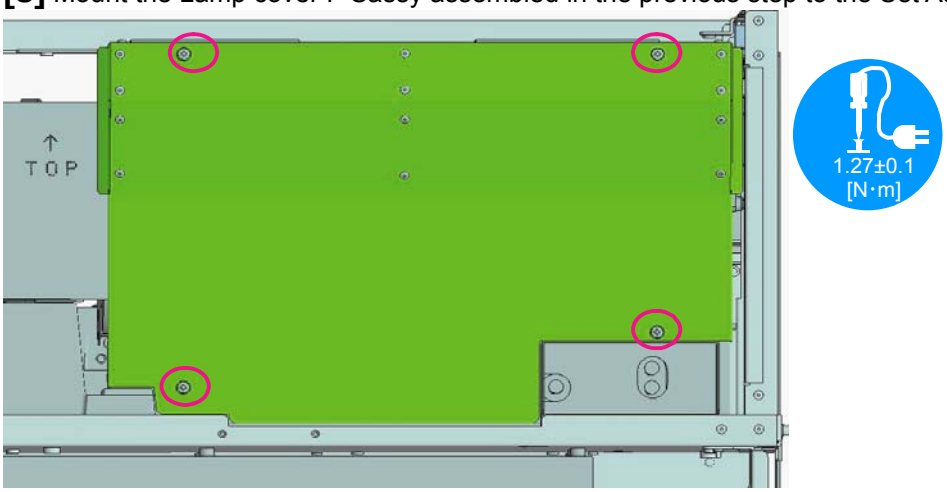

143. SET ASSY

	Diagram symbol	Circuit symbol	Part name	Part number	Q'ty	Remarks
	①		REAR PANEL B ASSY	24PS5851	1	
	②	S60040	PL-CPIMS*4*10*3KF	24V00461	4	Torque management
	③		REAR PANEL T ASSY	24PS5841	1	
	④		COVER(REAR PANEL)	24P06461	1	
	⑤	S64003	SPECIAL SCREW(M4*18)	24N08431	2	Torque management
	⑥	S64002	PIWA*4*3GF	24V00661	2	
	⑦	K64002	LABEL(LAMP ADJUSTMENT AXI)	24L65601	1	

[1] Mount the Rear panel B Assy to the Set Assy.

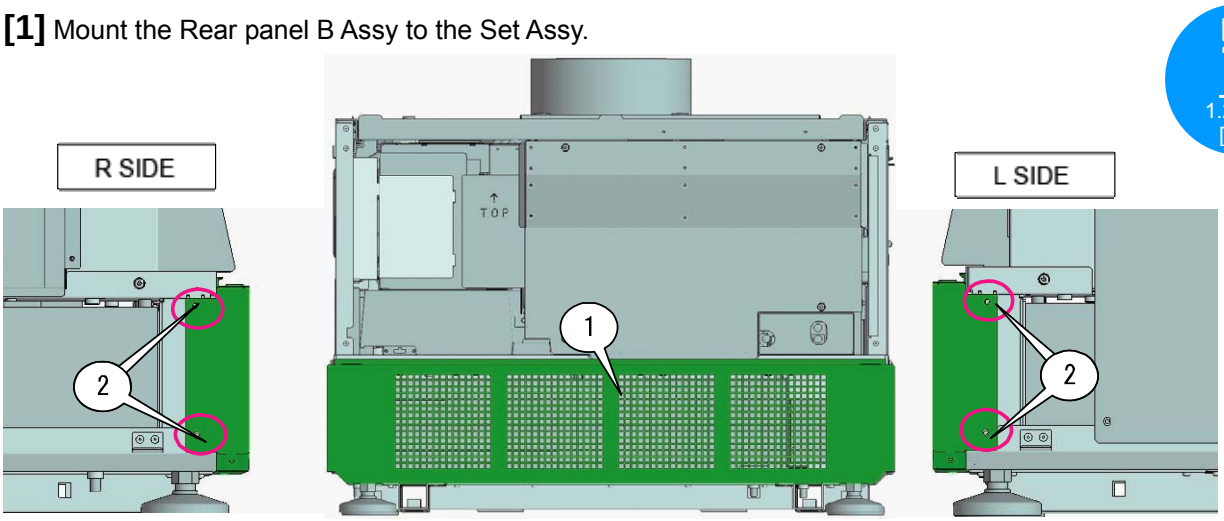

[2] Paste the Label to the appropriate position at the rear side of the Cover (rear panel).
After that, mount the cover (Rear Panel) on the rear panel T Assy.

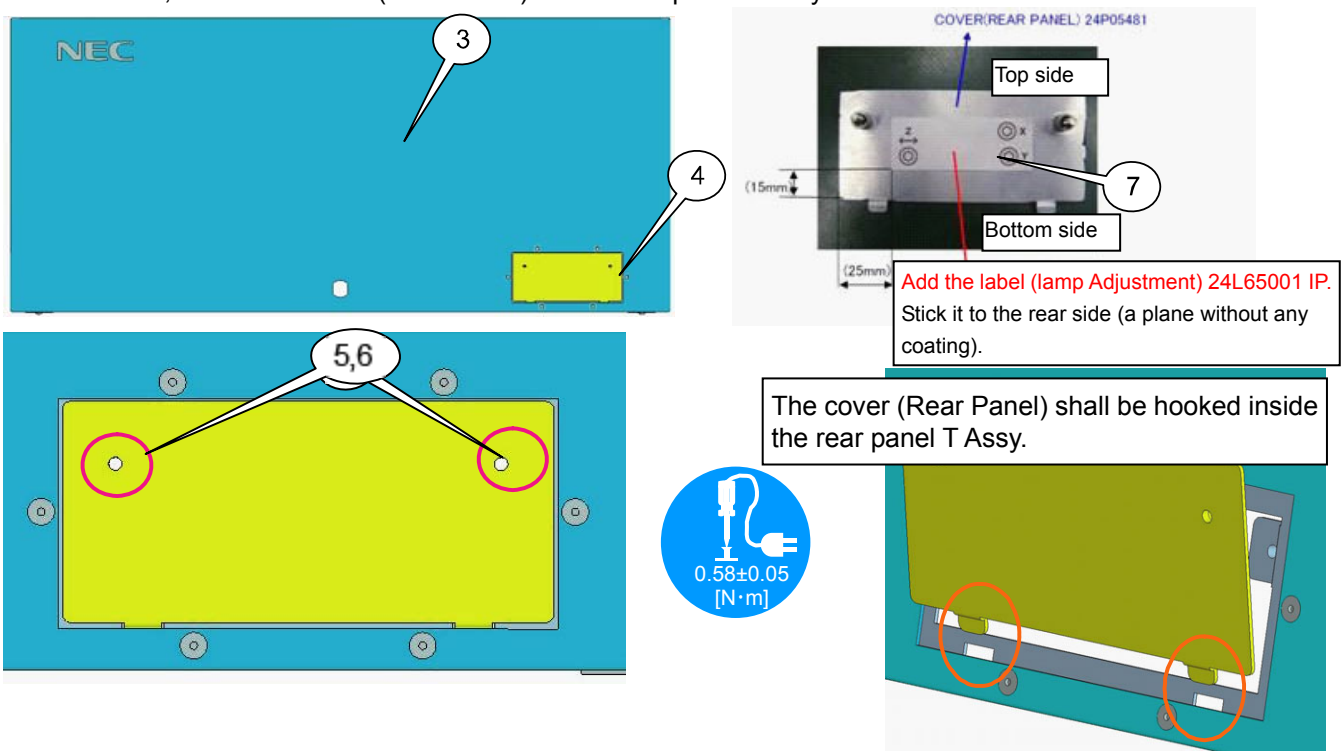

144. SET ASSY

	Diagram symbol	Circuit symbol	Part name	Part number	Q'ty	Remarks
	①	K64004	LOCK(TL-96L)	24C09131	1	Torque management
	②	K64003	CAM(LOCK)	24H68471	1	
	③	K60085	GLUE,SCREW LOCK	92201082		Amount used = approx. 0.02g×2 points
	④	K64007	GASKET(STG0.5-8 L=250)	24C09951	2	

[1] Stick the gasket in between the slit and another slit on the rear side of the rear panel.

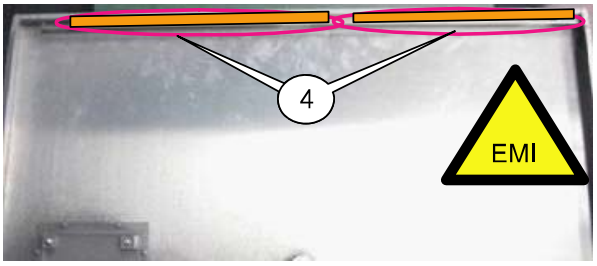

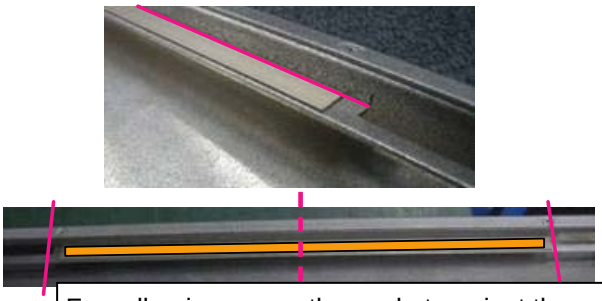

For adhesion, press the gasket against the corner so that the slit-to-slit center comes to the gasket center.

[2] Take out the plate by removing the lock (TL-96L) nut.
Mount this plate on the cover (Rear Panel) after reversing its posture at the time of delivery.

At the time of delivery: There is a claw on the right based on the lower protrusion.

At the time of mounting: There is a claw on the left based on the lower protrusion.

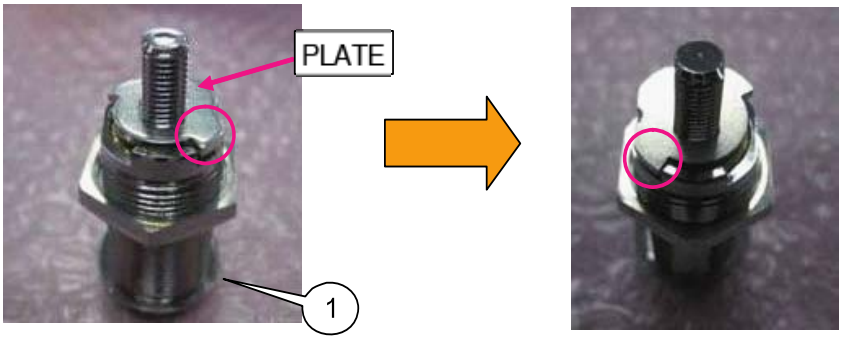

In this case, the notch at the key insertion section is required to face upwards.

In the state that the key can be pulled out, mount it as illustrated below.
Remove Nut 2 of the lock (TL-96L), pass the lock (TL-96L) through the hole of the cover (Rear Panel), and tighten it with Nut2.
After tightening, apply Glue Screw Lock.
Remove Nut1 and washer from the tip of the lock (TL-96L), mount the cam (Lock), and tighten it with the same Nut1 and washer.

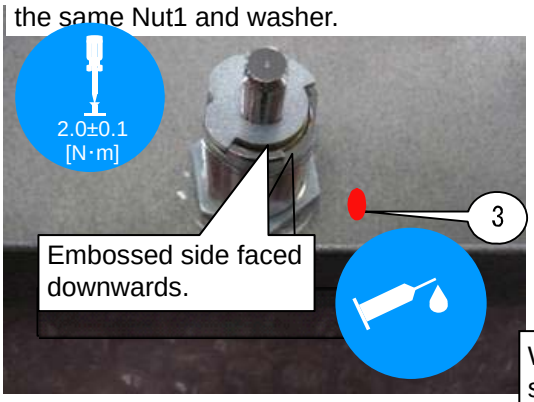

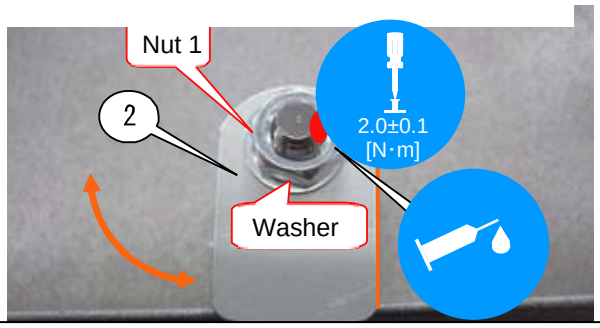

When the key is pulled out, the cam (Lock) TI comes to the lower side (panel end side) position. Fix the cam there. Key ON-OFF is as indicated by the arrow mark in the illustration.

145. SET ASSY

	Diagram symbol	Circuit symbol	Part name	Part number	Q'ty	Remarks

[1] Mount the Rear panel T Assy to the Set Assy.
Insert three bosses of the duct (TOP) and fix it with the lower ball lock.
Fixing is finished by locking the key. [The key goes to the packing process (Service Bag Sassy).]

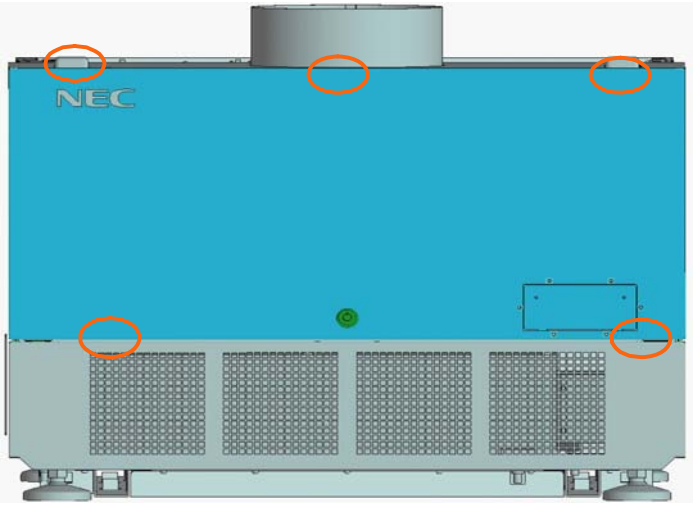

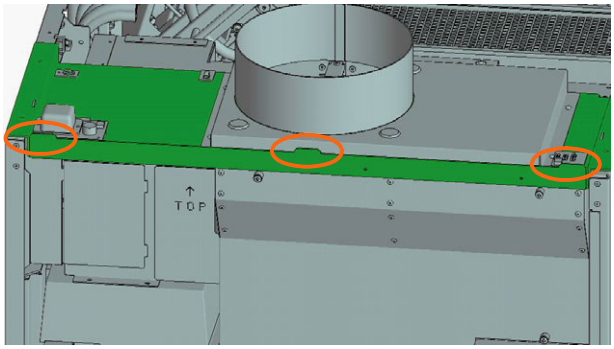

146. SET ASSY

	Diagram symbol	Circuit symbol	Part name	Part number	Q'ty	Remarks
	①		Jig bulb		1	

PICLS

Lamp Bulb Mounting Work

The lamp-related work to be described below is carried out in an appropriate lamp mounting room for the purpose of security. Each worker is required to wear a protective mask, protective gloves, protective arm cover, and protective clothing.

[1] Mount the lamp bulb on the reflector base.
If the bulb is not attached with a protection sheet, do not let it come in contact with other items.
Do not use any bulb that has touched other items. (There is possibility of failure in lamp lighting and lamp fracture.)

1. Insert the bulb in the anode side of the reflector.
   At that time, make sure not to hit the reflector, lamp cover, etc., with the bulb.

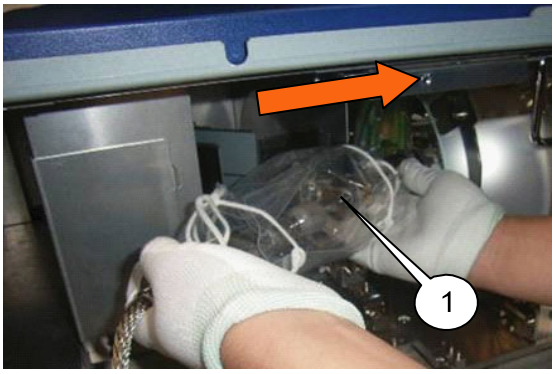

2. Hold the metallic sections on both sides of the bulb and insert the bulb in the lamp mounting section.

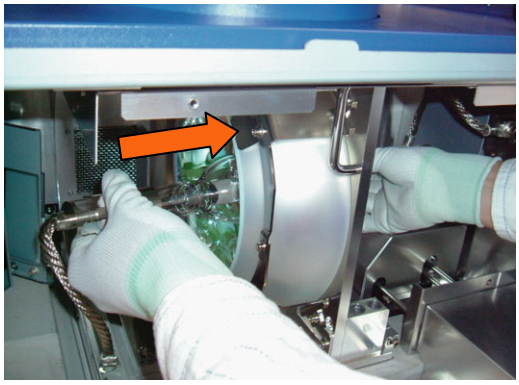

3. Loosen the hexagon socket head screw located at the lamp bulb mounting section and insert the bulb. Then, tighten the screw with a ball screwdriver (3mm).

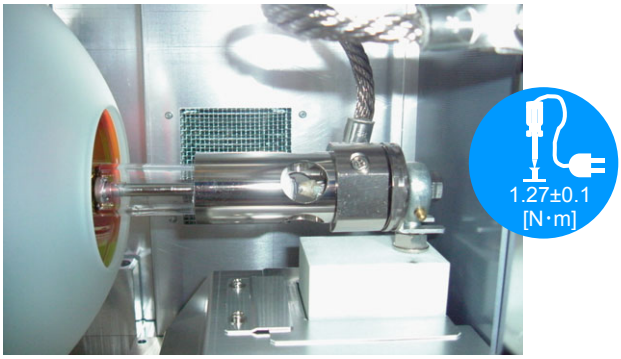

4. Mount the screw used to fasten the core cable from the lamp bulb on the outgoing radiation side.

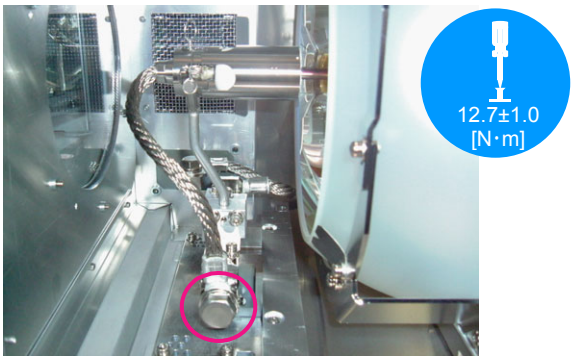

[2] After the completion of bulb mounting, untie the strings and remove the protection sheet.

147. SET ASSY

	Diagram symbol	Circuit symbol	Part name	Part number	Q'ty	Remarks
	①	K60024	PLATE(HIDE)(TI BOX)	24H67371	1	
	②	K87001	PLATE(HIDE)MM	24P06571	1	
	③	K87002	GASKET(STG1-3 L=280)	24C09821	1	
	④	S87001	SPECIAL SCREW(M4*14)	24N07492	2	Torque management

[1] Slide the plate (Hide)(TI Box) along the rail and enter it in the case (TI) Assy.

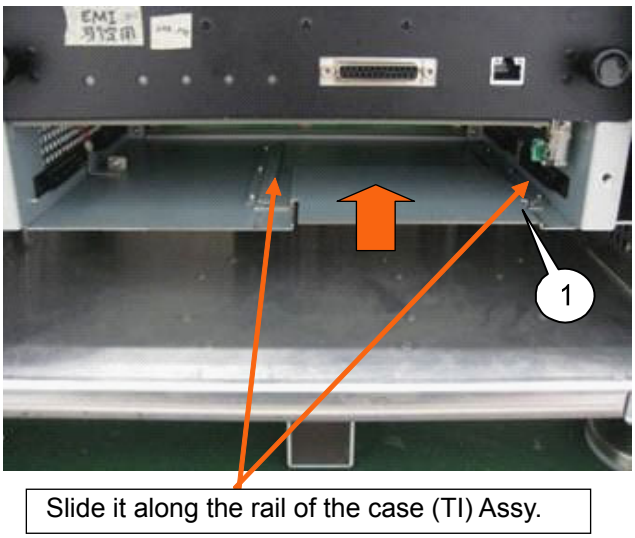

[2] A special screw (M14*14) and a gasket are mounted on the plate (Hide)(TI Box). Mount this plate on the case (TI) Assy.

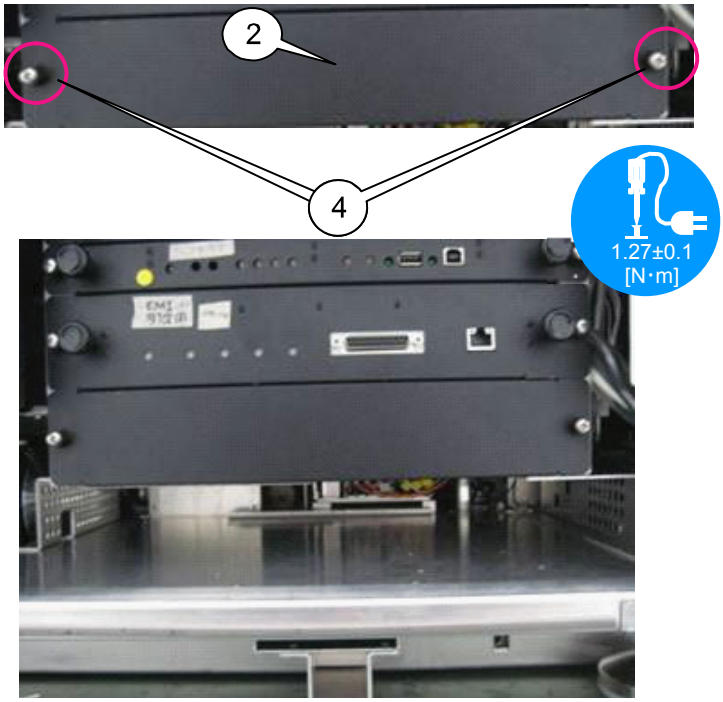

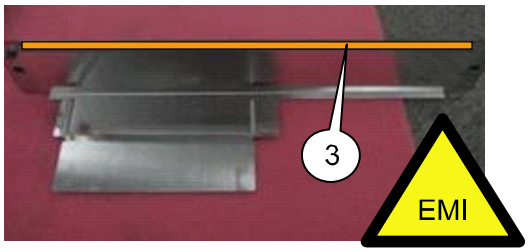

148. SET ASSY

	Diagram symbol	Circuit symbol	Part name	Part number	Q'ty	Remarks
	①		SHEET(LENS) SASSY		1	
	②	S60044	CFIMS*3*6*3KF	24V00421	2	Torque management
	③	S60043	PL-CIPIM*3*8*3GF	24V00111	6	Torque management

[1] Mount the Sheet (lens) Sassy to the Set Assy.

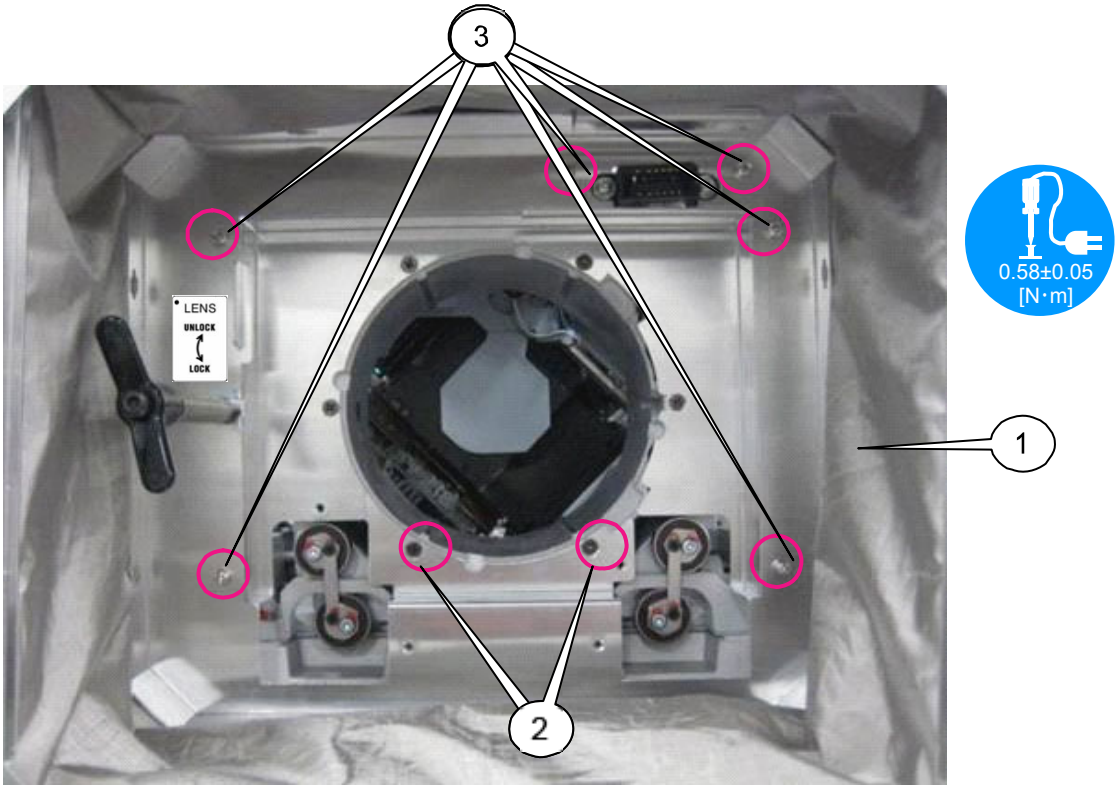

149. SET ASSY

	Diagram symbol	Circuit symbol	Part name	Part number	Q'ty	Remarks
	①		COVER(SHIELD)	24H60951	1	
	②	S60026	PL-CPIMS*3*8*3GF	24V00111	4	Torque management
	③	K60006	CAUTION LABEL(H LEAKAGE)	24L69131	1	

[1] Mount the Cover (shield).

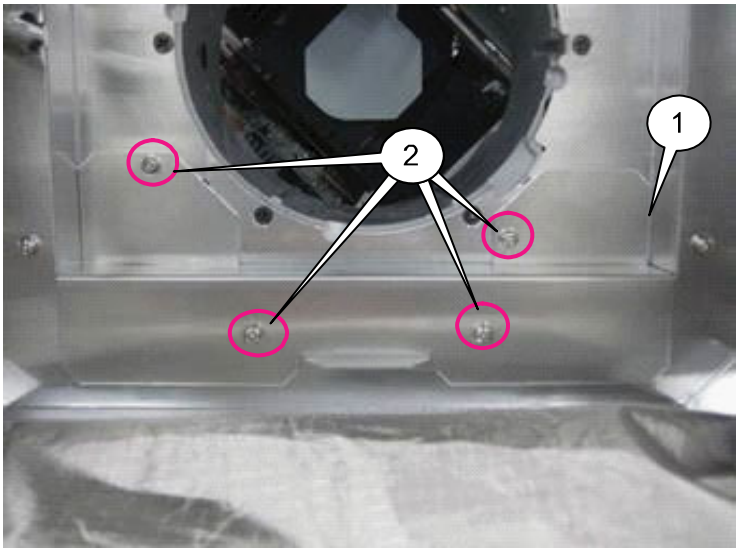

[2] Paste the Caution label (H leakage) under the front terminal.
Stick it while it is applied to the step of the frame.

150. FRONT PANEL SASSY

	Diagram symbol	Circuit symbol	Part name	Part number	Q'ty	Remarks
	①		FRONT PANEL ASSY	24PS5801	1	
	②		COVER(AT)	24P06471	2	
	③	S61002	SCREW,PL-CPIMS*3*8*3GF	24V00111	4	Torque management
	④	K61003	LATCH(TL-304-2)	24C09761	2	One item for a pair of the convex and concave sides
	⑤	K61004	FILTER B	24J28391	2	
	⑥		COVER(FILTER)F	24P06481	1	
	⑦	K61002	SPACER(TL-235-3)	24C09771	1	

[1] Mount the concave side of the Cover (AT) and Latch (TL-304-2) to the Front panel Assy.

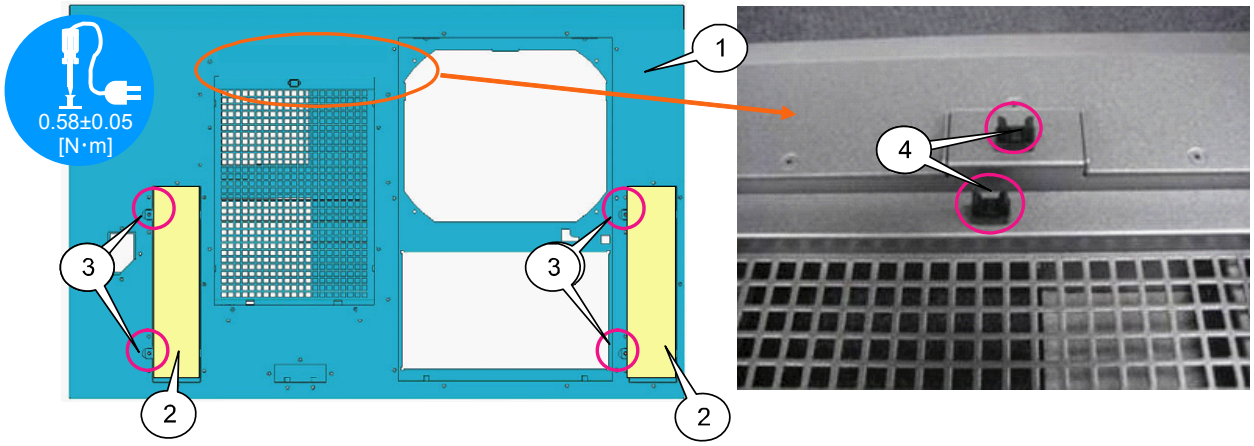

[2] Enter the Filter B in the Front Panel Assy and mount the cover (Filter) F from above.
Insert the spacer (TL-253-3) in between the cover (Filter) F and the latch (TL-304-2) to be installed on the cover (Filter) F.

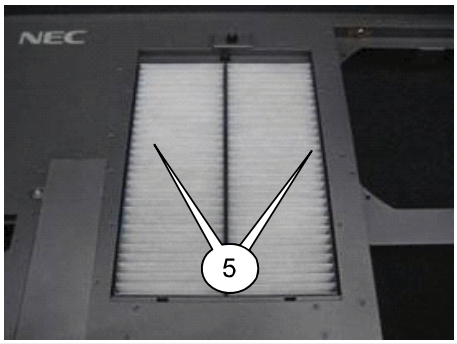

Pay attention to the arrow mark for the filter (toward inside).

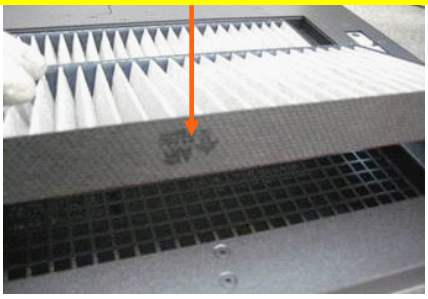

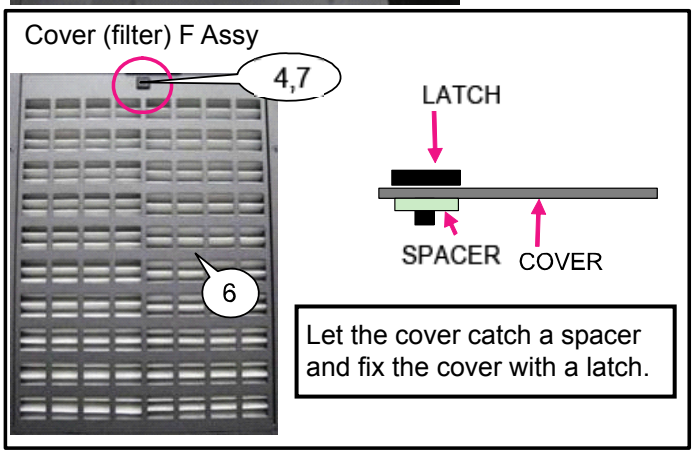

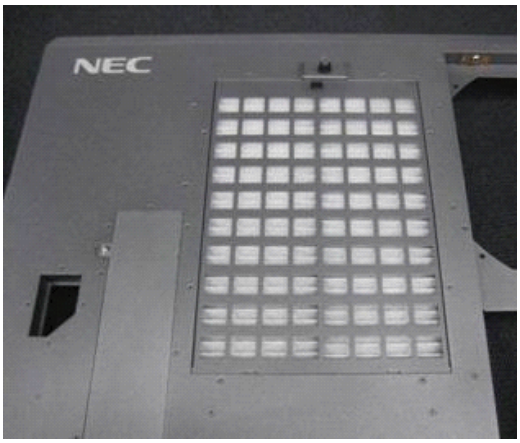

151. FRONT PANEL SASSY

	Diagram symbol	Circuit symbol	Part name	Part number	Q'ty	Remarks
	①		COVER(F-FILTER)	24D15541		

[1] Mount the convex side of the Latch (TL-304-2) to the Cover (F-filter).
No spacer is used in this section. Mount the latch directly.

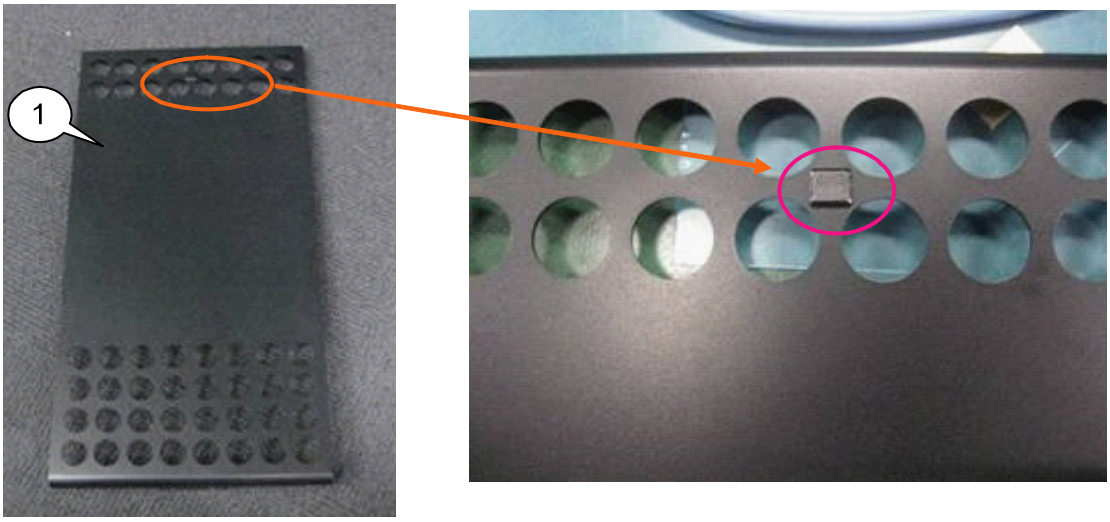

[2] Mount the Filter to the Front panel.

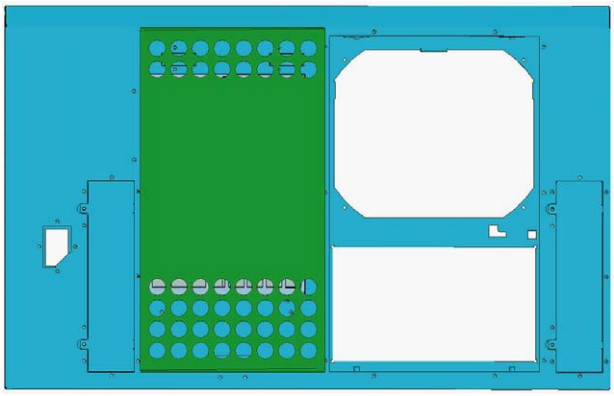

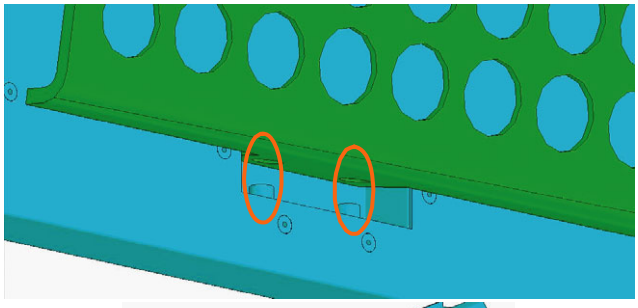

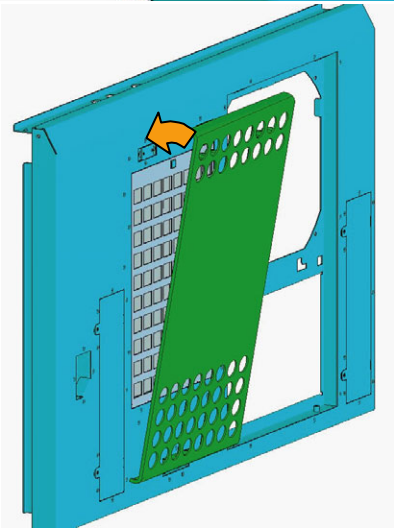

For installation, insert a positioning jig in the lower hole and fix it with a latch.
For fixing, push and fix the latch section.

152. TOP COVER(F) SASSY

	Diagram symbol	Circuit symbol	Part name	Part number	Q'ty	Remarks
	①		TOP PANEL F ASSY	24PS5831	1	
	②	K62006	CATCH(TL-119)	24C09751	1	One item for a pair of the convex and concave sides
	③	S62004	CFIMS*3*6*3KF	24V00421	4	Torque management
	④	K62011	LATCH(TL-304-2)	24C09761	1	One item for a pair of the convex and concave sides
	⑤		COVER(TOP)ASSY	24PS5881	1	
	⑥		HINGE(TH-TM-6)	24C09781	2	
	⑦	S62005	CFIMS*3*6*3KF	24V00421	4	Torque management
	⑧	K62007	CUSHION(TF)	24J37281	1	

[1] Mount the concave side of the catch (TL-119) and that of the latch (TL-304-2) on the Top Panel F Assy.
* Mount the convex side of the latch on the cover filter (T).

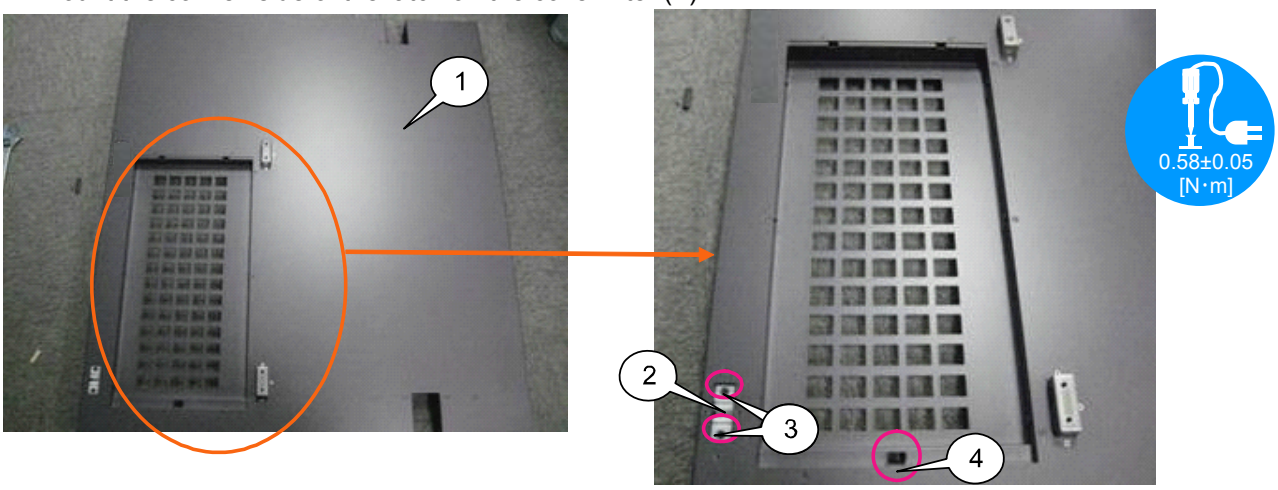

[2] Mount the hinge (TH-TM-6), the convex side of the catch (TL-119), and the cushion (TF) on the Cover (Top) Assy.
Stick the cushion (TF) after removing the film.

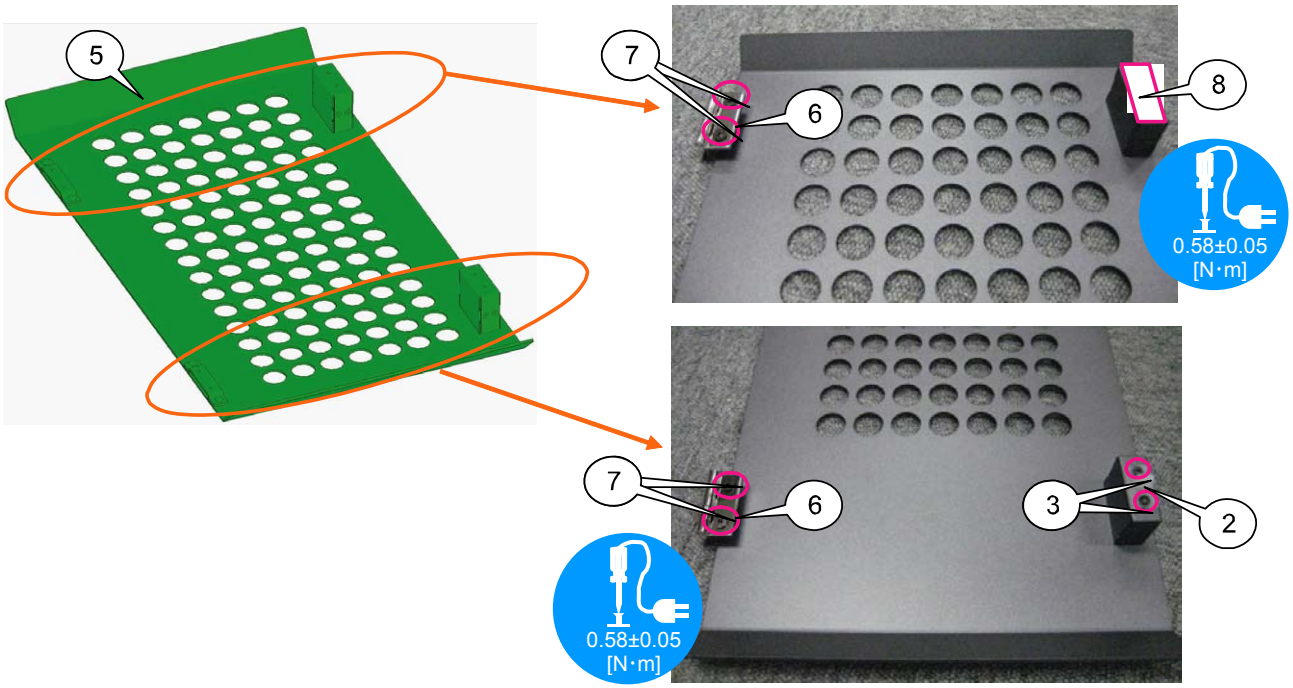

153. TOP COVER(F) SASSY

	Diagram symbol	Circuit symbol	Part name	Part number	Q'ty	Remarks
	①	K62005	GROMMET(MG-14)	24C09791	2	
	②	S62005	CFIMS*3*6*3KF	24V00421	4	Torque management

[1] Mount the Grommet (MG-14) to the Cover (top) Assy.

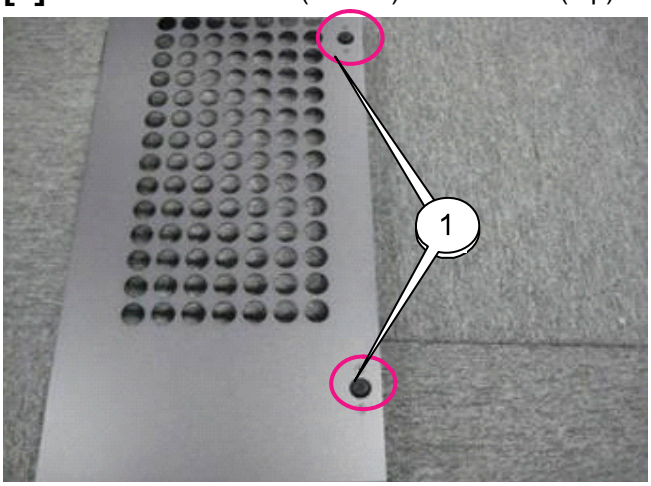

[2] Mount the Cover (top) Assy to the Top panel F Assy.
During the mounting work, lay a cushion between the Top Panel F Assy and the Cover (Top) Assy to facilitate the work.

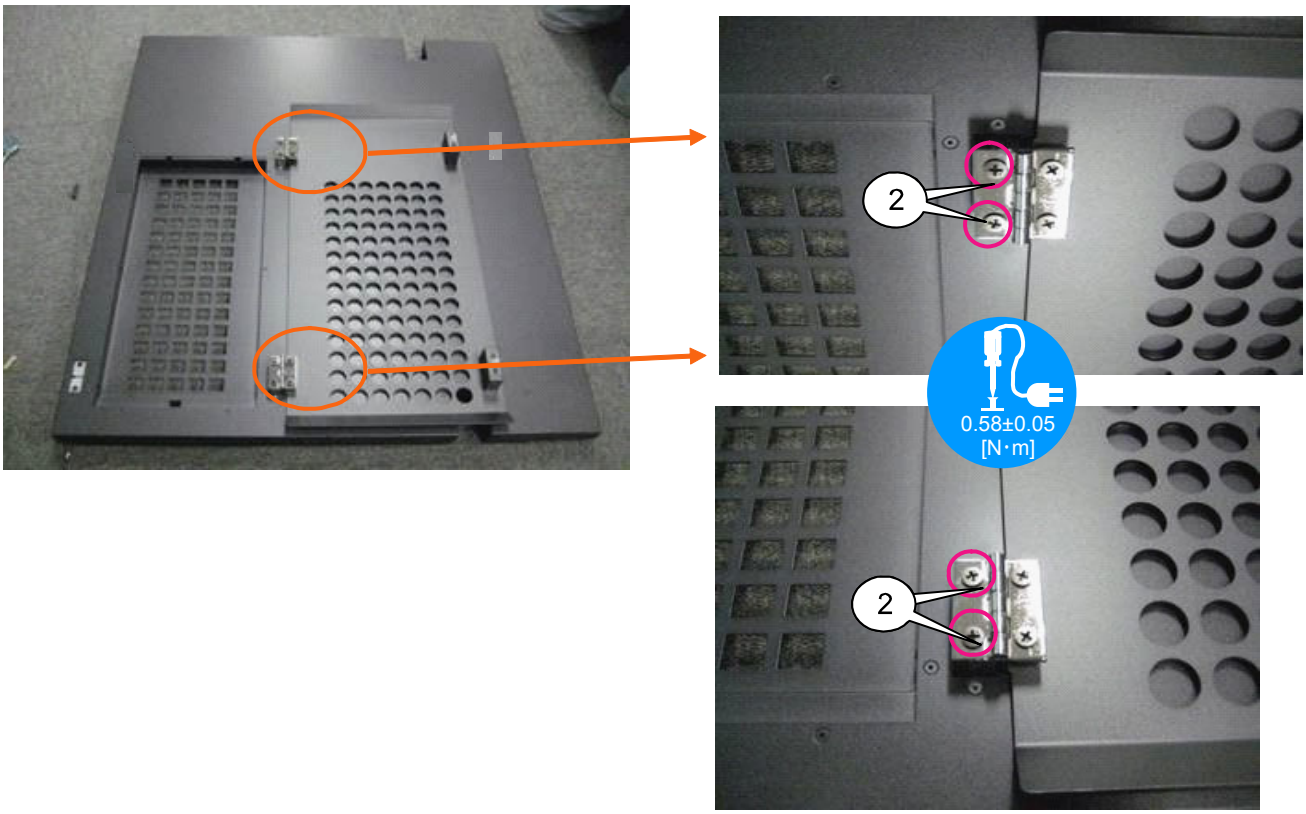

125. TOP COVER(F) SASSY

	Diagram symbol	Circuit symbol	Part name	Part number	Q'ty	Remarks
	①		FILTER A	24J28381	2	
	②		COVER(FILTER)T	24P06501	1	
	③	K62010	SPACER(TL-235-3)	24C09771	1	
	④		COVER(TOP)F	24P06521	1	
	⑤	S62003	PL-CPIMS*3*8*3GF	24V00111	4	Torque management

[1] Enter the Filter A in the Top Panel F Assy and mount the cover (Filter) T from above.
Insert the spacer (TL-253-3) in between the cover (Filter) T and the latch (TL-304-2) to be installed on the cover (Filter) T.

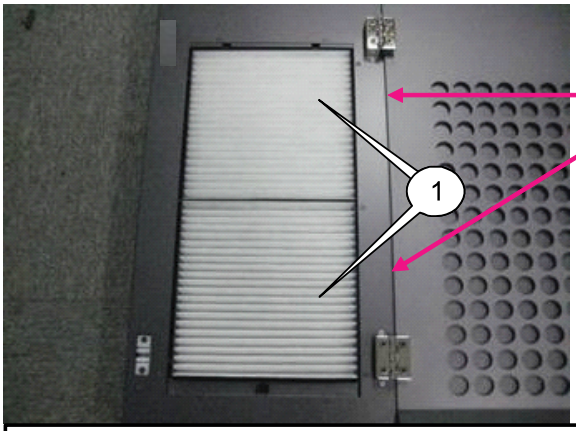

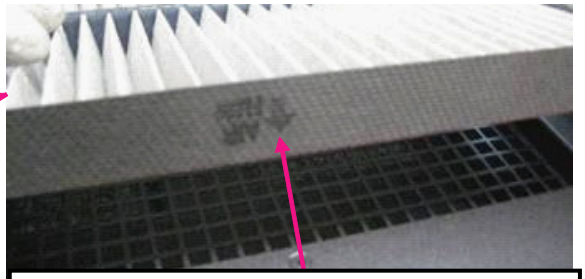

Pay attention to the arrow mark for the filter (toward inside).

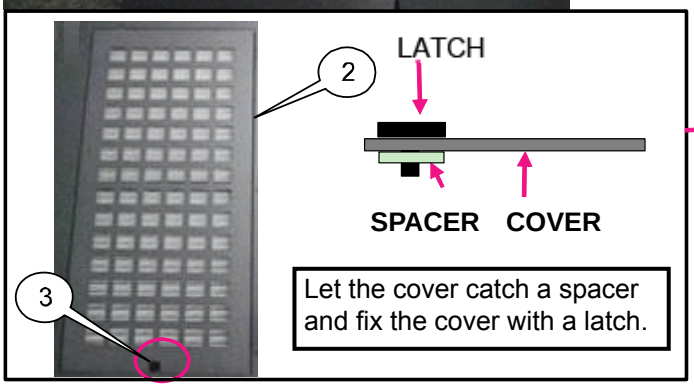

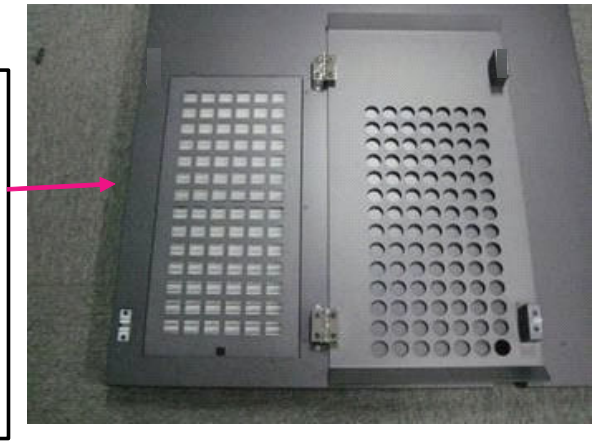

[2] Mount the Cover (top) F to the Top panel F Assy.

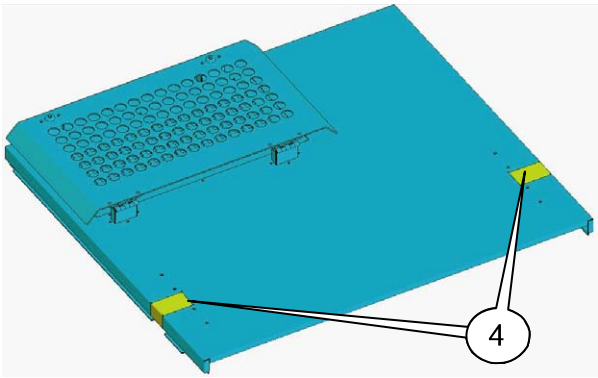

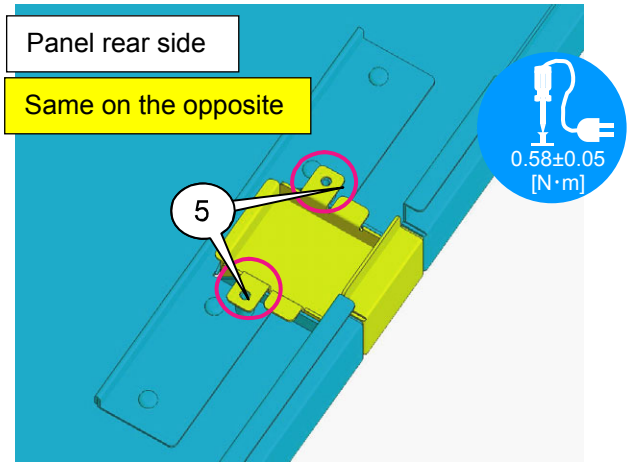

155. SIDE PANEL(L) SASSY

	Diagram symbol	Circuit symbol	Part name	Part number	Q'ty	Remarks
	①		SIDE PANEL L ASSY	24PS5822	1	
	②		COVER(MM)	24P06512	1	
	③	S65004	PL-CPIMS*3*8*3GF	24V00111	2	Torque management
	④		DECOR PLATE(LIGHT)	24K26541	1	
	⑤	S65003	SPECIAL SCREW(M4*18)	24N08431	5	Torque management
	⑥	S65002	PIWA*4*3GF	24V00661	5	

[1] Mount the Cover (MM) and Decor plate (light) to the Side panel L Assy.

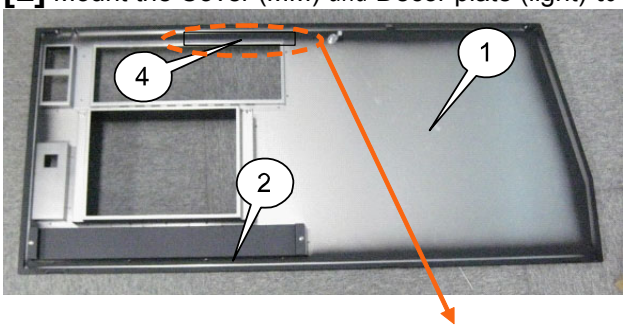

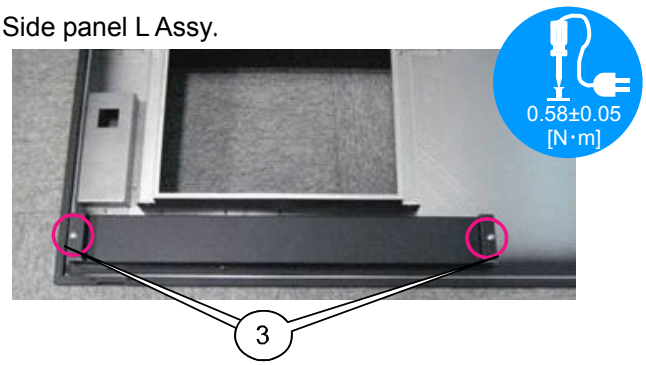

[2] Peel off the protection sheet from the Décor plate and stick the plate to the position where three holes are covered.
Stick it by applying it to the corner located behind.

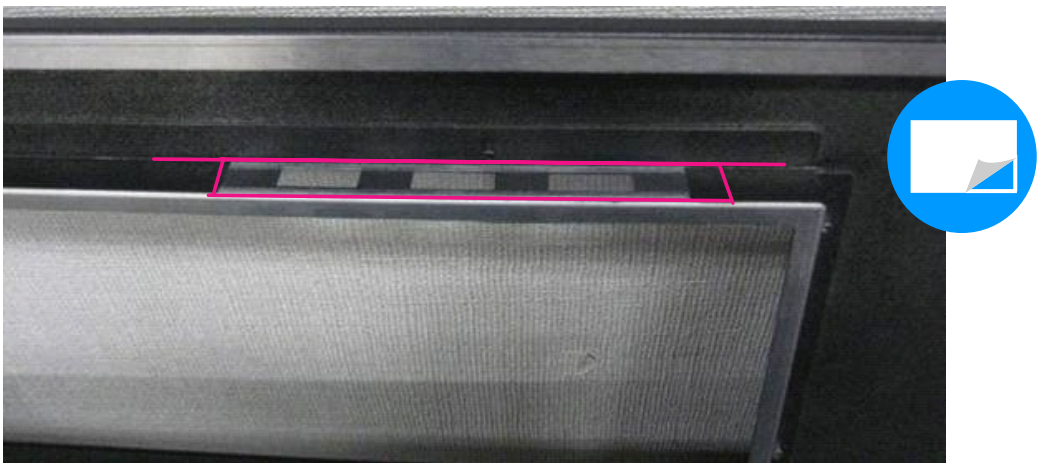

[3] Mount the Special screw (M4*18) and PIWA*4*3GF to the Side panel L Assy.

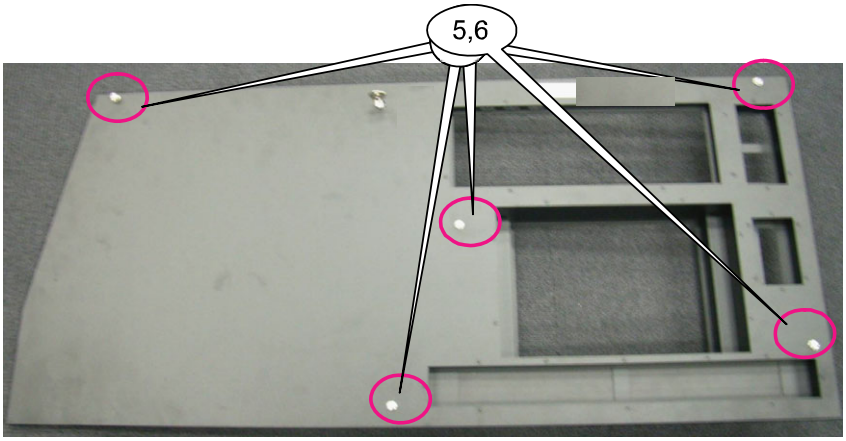

156. SIDE PANEL(L) SASSY

	Diagram symbol	Circuit symbol	Part name	Part number	Q'ty	Remarks
	①	K65004	LOCK(TL-225)	24C09081	1	Torque management
	②	K65005	CAM LOCK S	24H68551	1	
	③	K60085	GLUE,SCREW LOCK	92201082		Amount used = approx. 0.02g×2 points

[1] Mount the key (TL-225) on the Side Panel L Assy.
This key is to be sent to the Service Bag Sassy process.

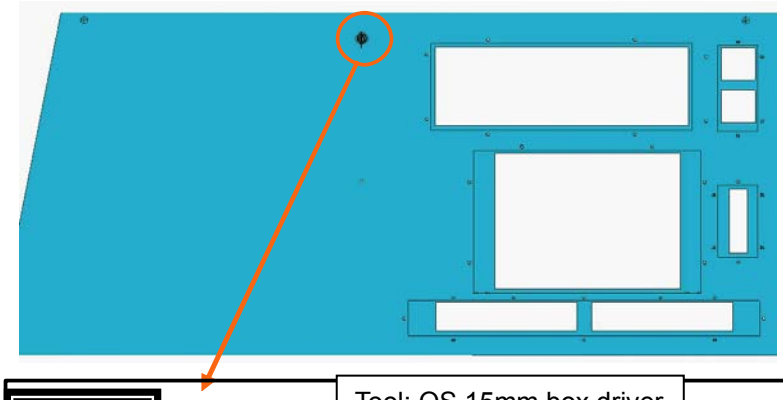

Mounting procedure

Tool: OS 15mm box driver

1

Embossed side faced downwards.

In this case, the notch at the key insertion section is required to face upwards.

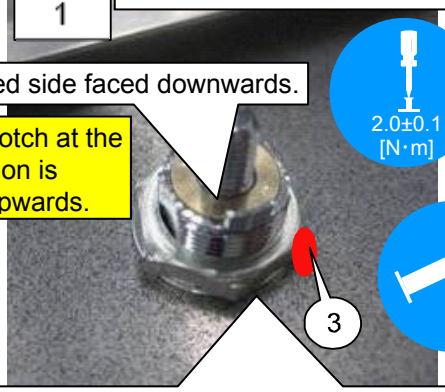

2.0±0.1 [N·m]

Insert the key from the front side. Enter a washer and fix it with a nut of 15mm.
Apply GLUE SCREW LOCK after fixing.

2

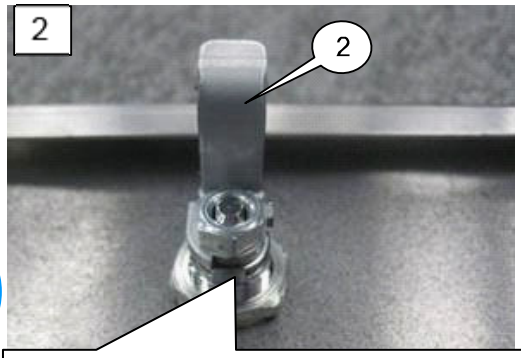

Insert the Camlock A based on the key boss.
Insert the lever so that it is positioned upwards.

3

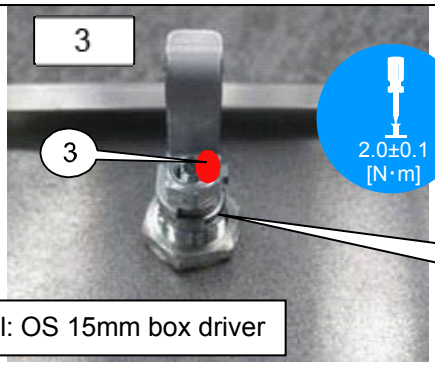

2.0±0.1 [N·m]

Enter a washer and fix it with a nut 8mm.
Apply GLUE SCREW LOCK after fixing.

Tool: OS 15mm box driver

157. SIDE PANEL(R) SASSY

	Diagram symbol	Circuit symbol	Part name	Part number	Q'ty	Remarks
	①		SIDE PANEL R ASSY	24PS5811	1	
	②	K66002	FILTER B	24J28391	2	
	③		PLATE WC	24J37291	1	
	④		COVER(FILTER)S	24P06491	2	
	⑤	K66004	LATCH(TL-304-2)	24C09761	2	One item for a pair of the convex and concave sides
	⑥	K66003	SPACER(TL-235-3)	24C09771	2	
	⑦	S66003	SPECIAL SCREW(M4*18)	24N08431	5	Torque management
	⑧	S66002	PIWA*4*3GF	24V00661	5	Torque management

[1] Mount the concave side of the Filter B, Plate WC and Latch to the Side panel R Assy.
Stick the Plate WC after peeling off its protection sheet.

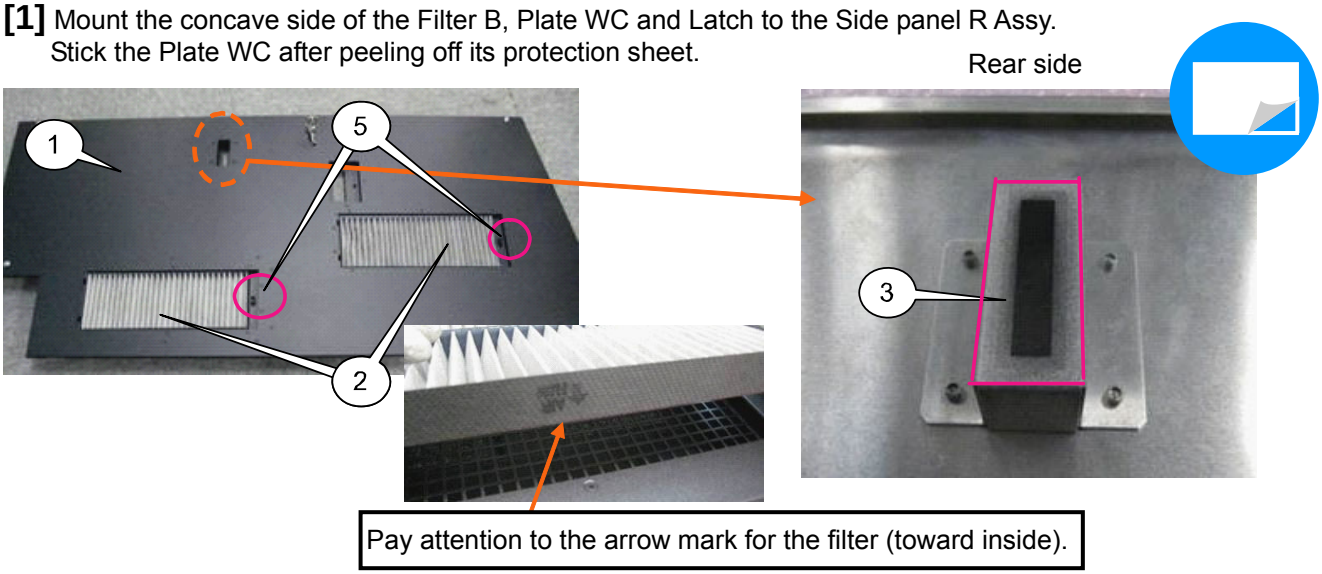

[2] Mount the Cover (filter) S to the Side panel R Assy.
Insert the spacer (TL-235-3) in between the cover (Filter) S and he convex side of the latch (TL-304-2) to be installed on the cover (Filter) S.

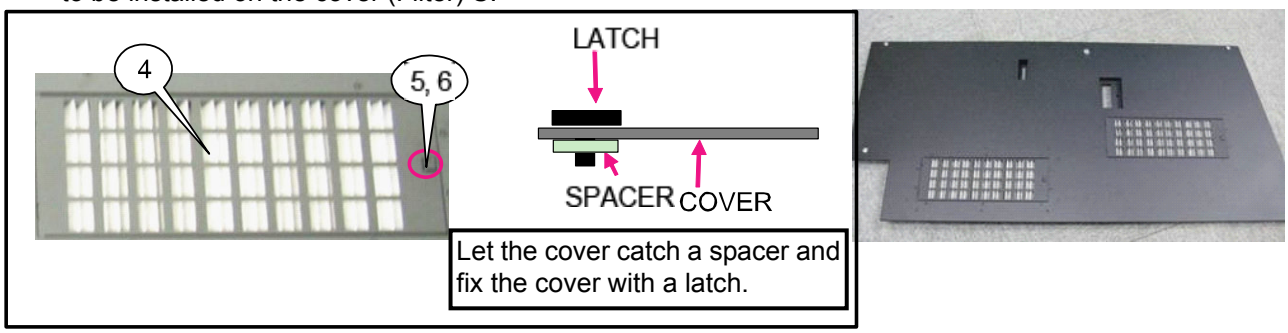

[3] Mount the special screw (M4*18), PIWA*4*3GF on the Side Panel R Assy.

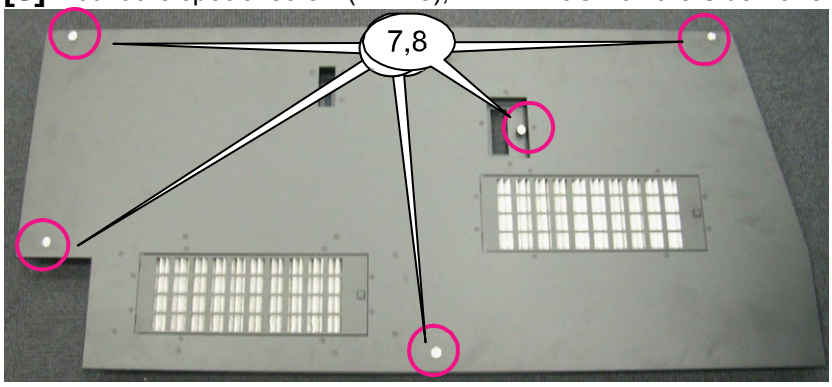

158. SIDE PANEL(R) SASSY

	Diagram symbol	Circuit symbol	Part name	Part number	Q'ty	Remarks
	①	K66005	LOCK(TL-225)	24C09081	1	Torque management
	②	K66006	CAM LOCK S	24H68551	1	
	③	K60085	GLUE,SCREW LOCK	92201082		Amount used = approx. 0.02g×2 points

[1] Mount the Lock (TL-225) to the Side panel R Assy.

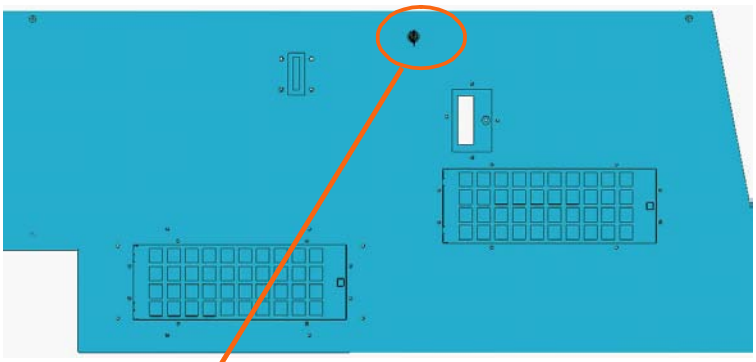

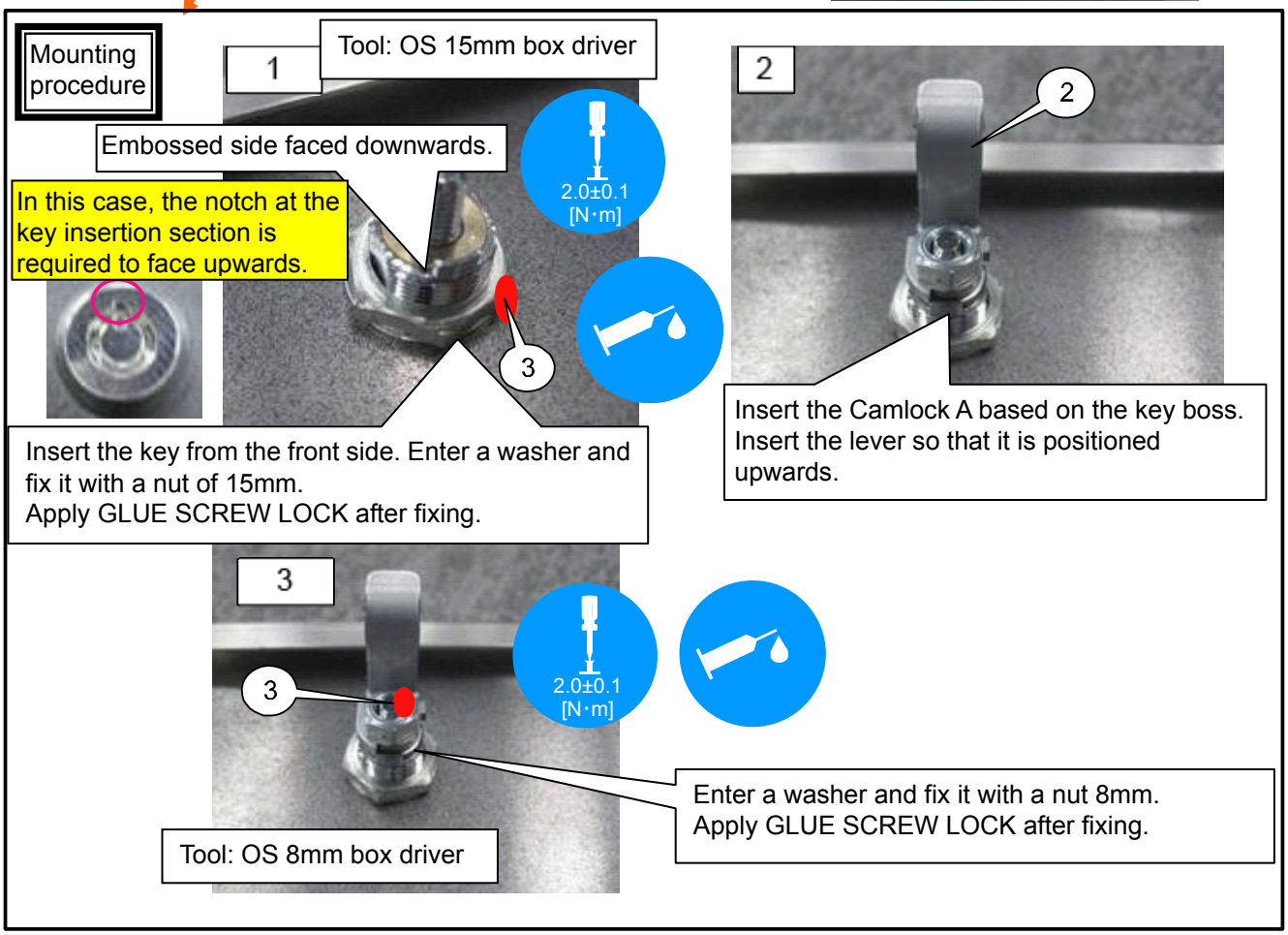

159. SET ASSY

	Diagram symbol	Circuit symbol	Part name	Part number	Q'ty	Remarks
	①		FRONT PANEL SASSY		1	
	②	S60057	PL-CPIMS*4*10*3KF	24V00461	2	Torque management
	③	S60058	SCREW,PL-CPIMS*3*8*3GF	24V00111	5	Torque management

[1] Mount the Front panel T Assy to the Set Assy.
After hanging it on the lower hook, set the Front Panel Assy and tighten and mount the screw from above.
* Confirm that the hook is assuredly effective.

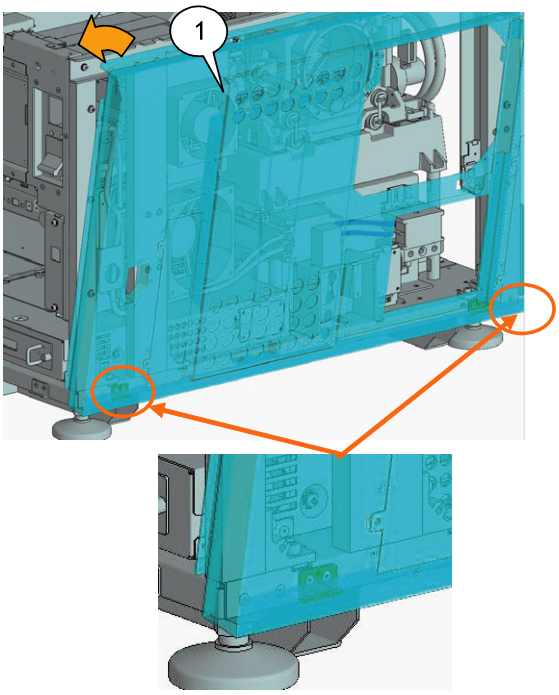

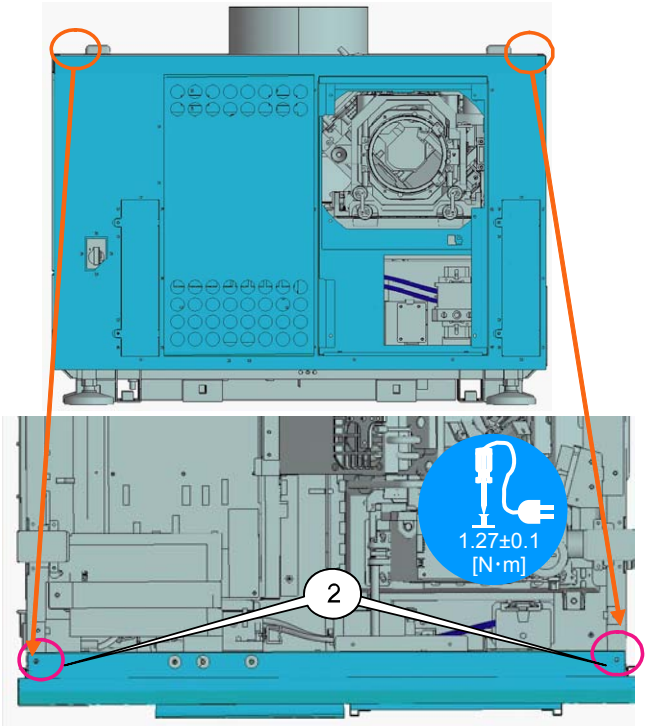

[2] Hook the claw of the Front Panel top on the upper side of the lens hood for the purpose of positioning.
Then, mount the lens hood on the Front Panel Assy.
A fin of the Front Panel shall be entered inside the lens hood.

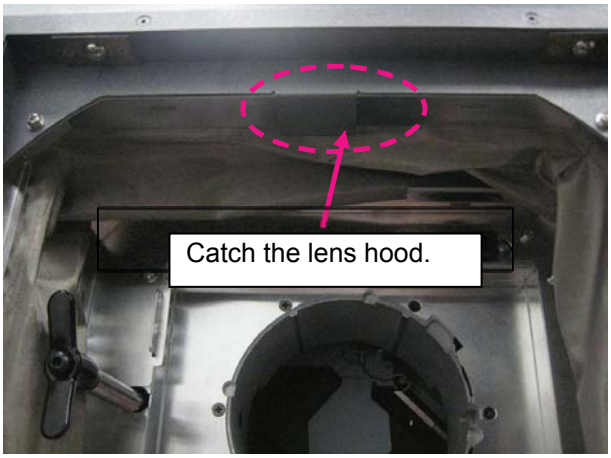

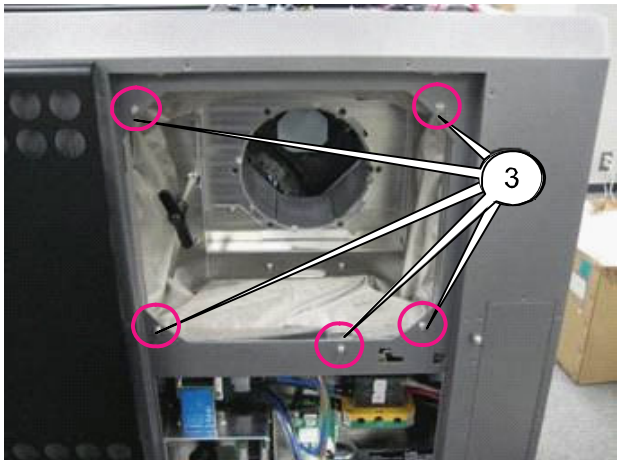

160. SET ASSY

	Diagram symbol	Circuit symbol	Part name	Part number	Q'ty	Remarks
	①		TOP COVER(F) SASSY		1	
	②	S60059	PL-CPIMS*4*10*3KF	24V00461	2	Torque management

[1] Mount the Top panel F Assy to the Set Assy.

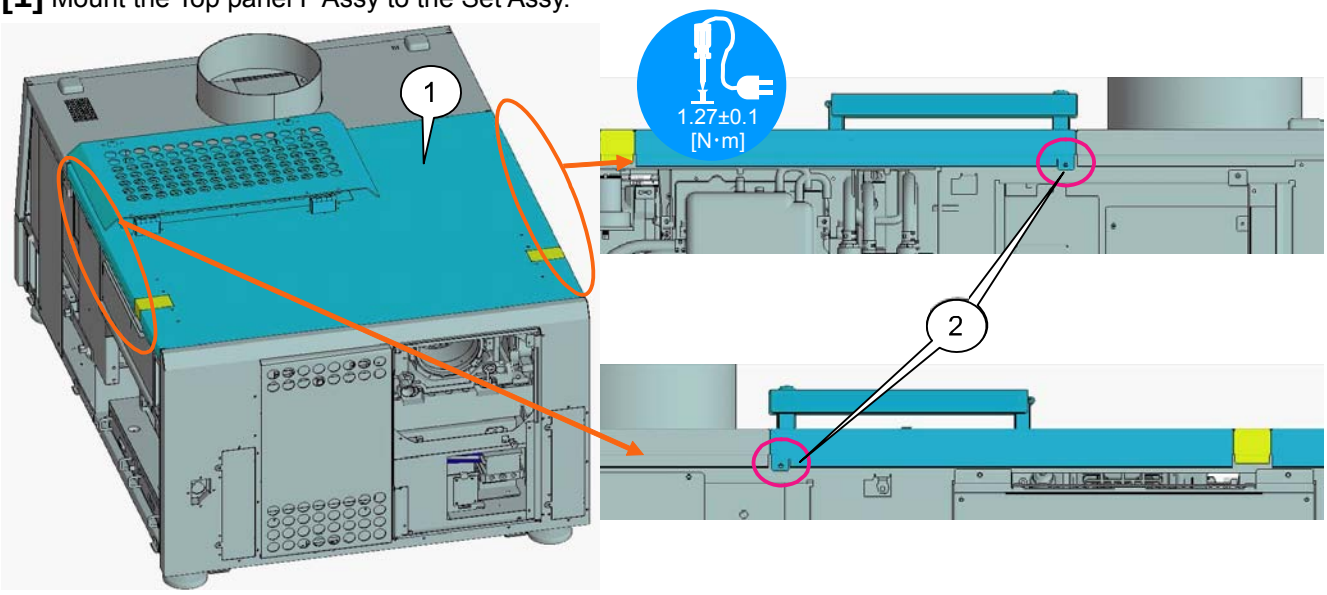

161. SET ASSY

	Diagram symbol	Circuit symbol	Part name	Part number	Q'ty	Remarks
	①		SIDE PANEL(L) SASSY		1	

[1] Get the set attached with the Side Panel (L) Assy that has been assembled as per previous pages.
In the first place, hang the side panel on the front side hook, then on the rear side hook for mounting.
Turn the key to fix the panel. After that, tighten the screws. After fixing, bring the key to the Service Bag Sassy.

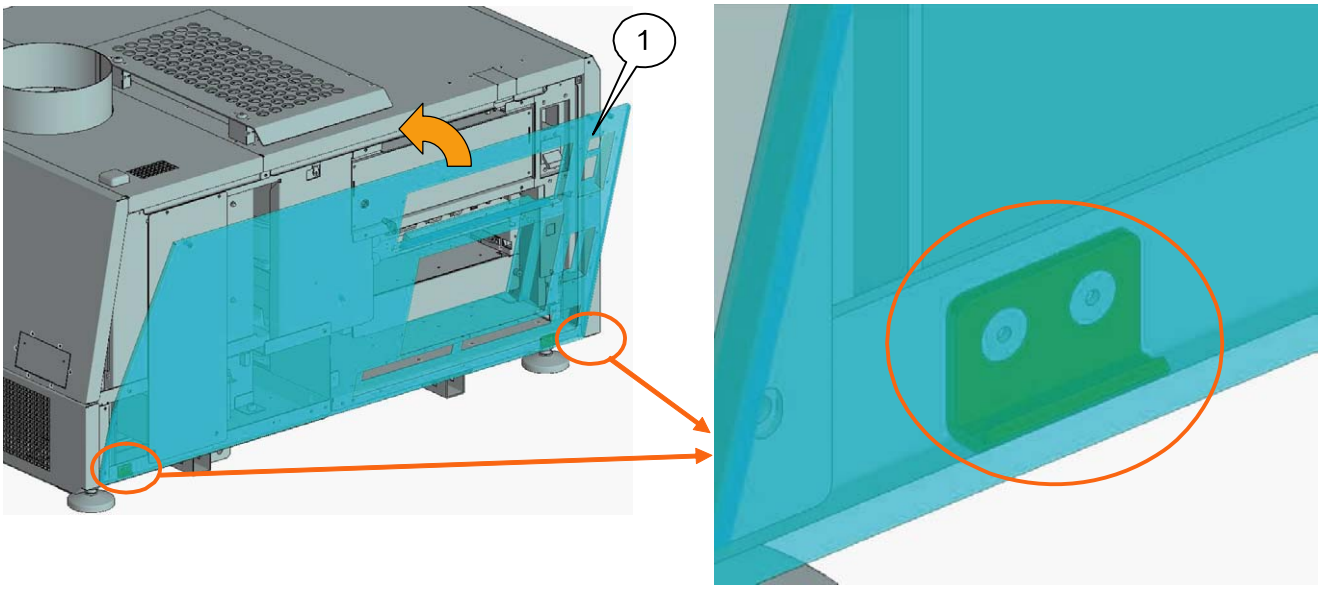

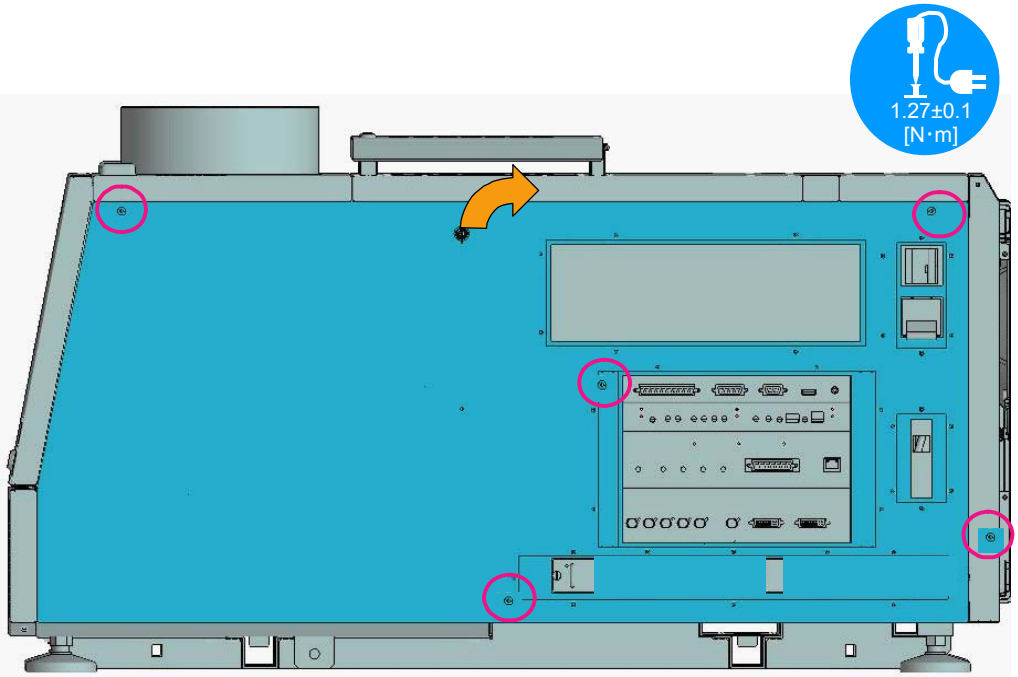

162. SET ASSY

	Diagram symbol	Circuit symbol	Part name	Part number	Q'ty	Remarks
	①		SIDE PANEL(R) SASSY		1	

[1] Get the set attached with the Side Panel (R) Assy that has been assembled as per previous pages.
For mounting, hang the side panel on the two lower hooks.
Turn the key to fix the panel. After that, tighten the screws. After fixing, abandon the key.

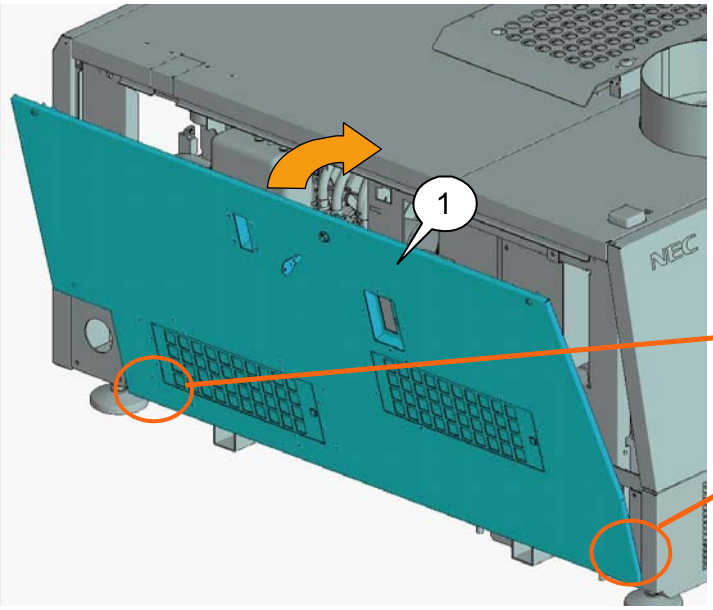

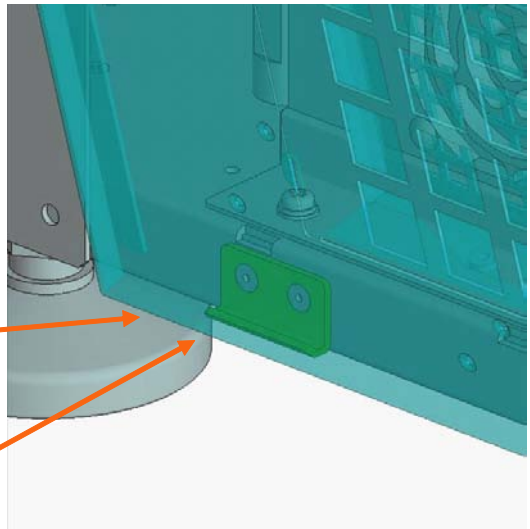

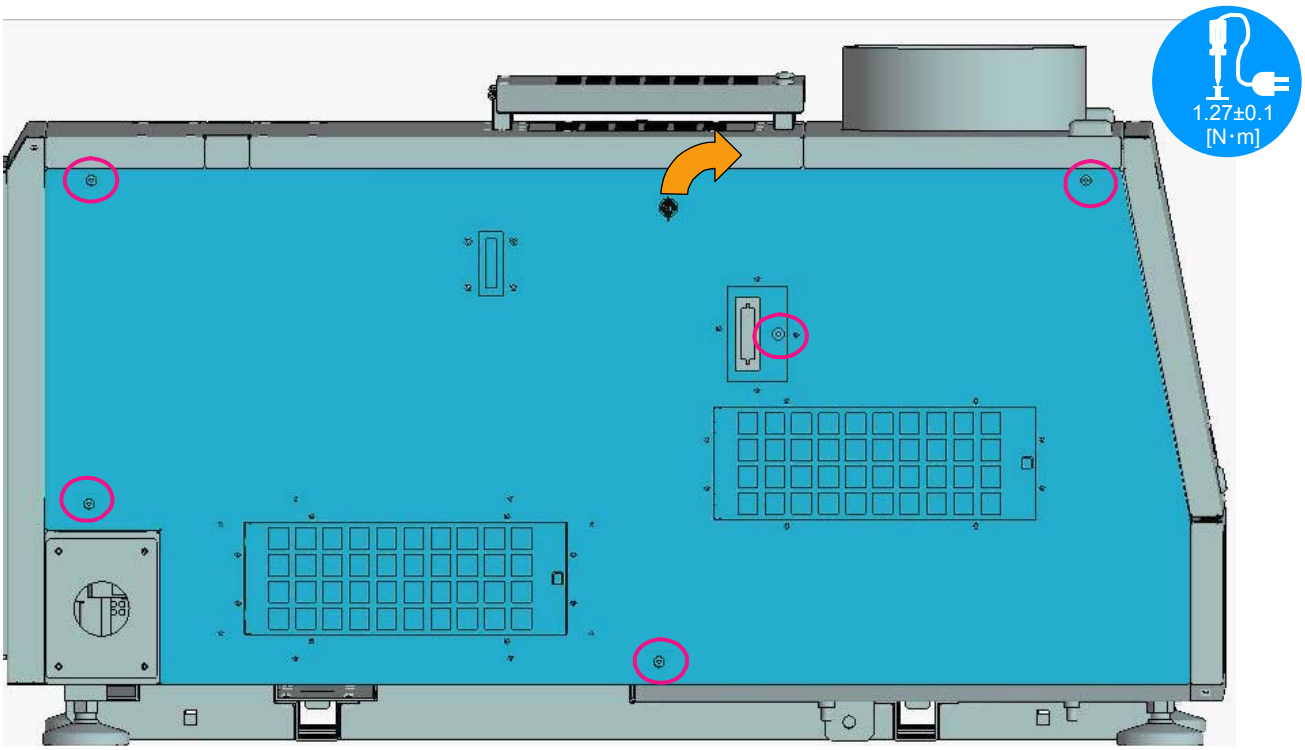

163. COVER(F-LENS) SASSY

	Diagram symbol	Circuit symbol	Part name	Part number	Q'ty	Remarks
	①		COVER(F-LENS)	24D15531	1	
	②	K68002	LOCK(TL-225)	24C09081	1	Torque management
	③	K68003	CAM LOCK F	24H67011	1	
	④	K60085	GLUE,SCREW LOCK	92201082		Amount used = approx. 0.02g×2 points

[1] Mount the Lock (TL-225) and Cam lock F to the Cover (F-lens).
Abandon the key.

164. COVER(F-LENS) SASSY

	Diagram symbol	Circuit symbol	Part name	Part number	Q'ty	Remarks
	①		COVER(LENS)ASSY	24PS5871	1	
	②	S68002	PL-CPIMS*3*6*3KF	24V00571	6	Torque management

[1] Mount the Cover (lens) Assy to the Cover (F-lens).

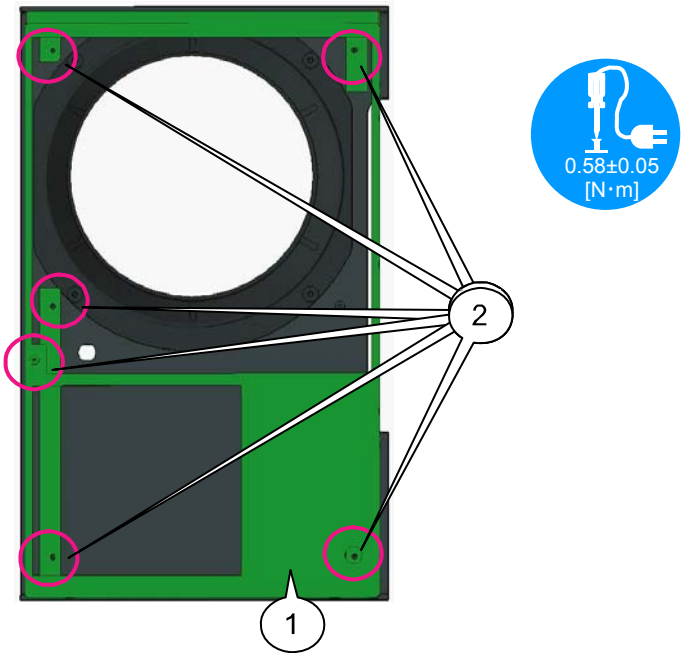

[2] Mount the Cover (F-lens) Assy assembled in the previous step to the Set Assy.
Enter the lower pin and fix the upper ball lock. Turn the key to fix it.
After fixing, abandon the key.

Set Assy shown below

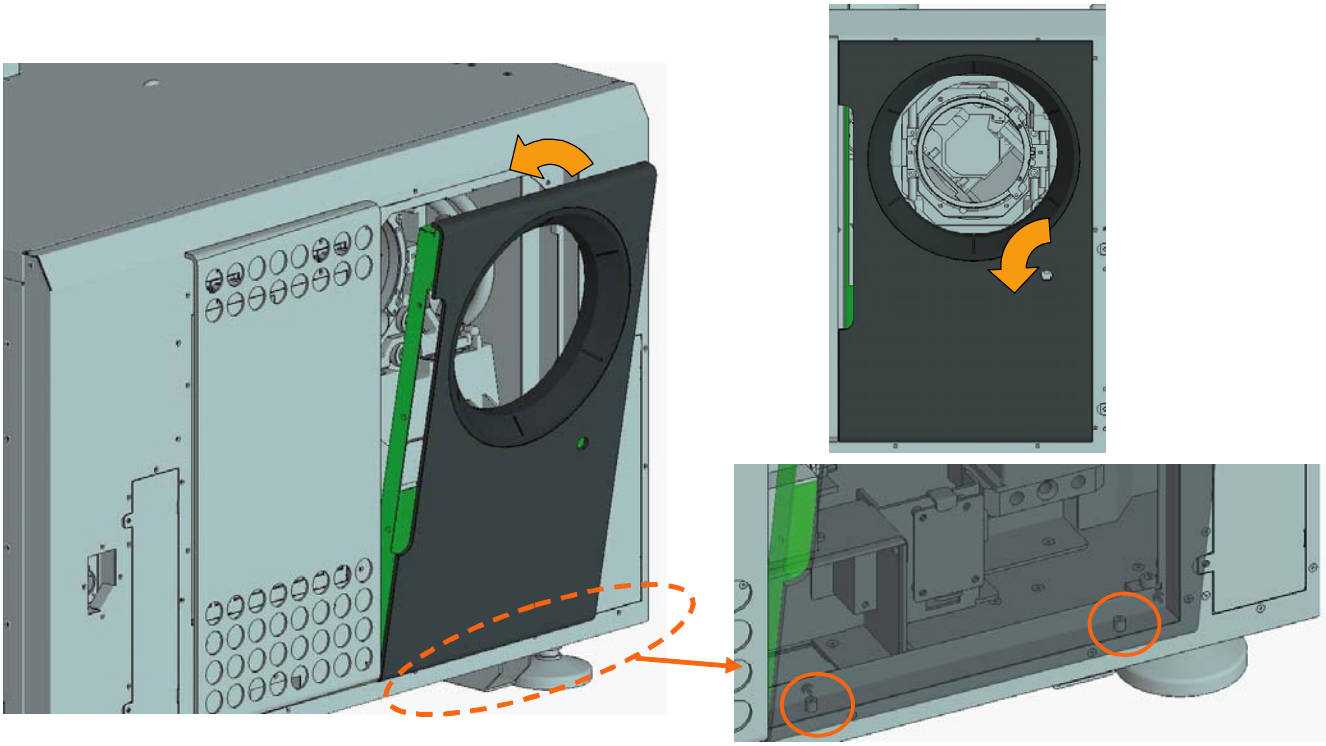

165. SET ASSY

	Diagram symbol	Circuit symbol	Part name	Part number	Q'ty	Remarks
	①	K65003	INSTRUCTION NAME PLATE	24L69111	1	
	②	K65002	CAUTION LABEL(AC POWER)	24L69121	1	
	③	K60004	LABEL SERIAL MANUFACTURE	24L62531	1	捺印されたもの
	④	K64006	CAUTION LABEL(LAMP)	24L69161	1	

This page is applicable only to the NC2000C.

[1] Stick a label to the position specified in the illustration below.
Stick the instruction nameplate only to the PASS set after the completion of testing.

・ Side Panel L

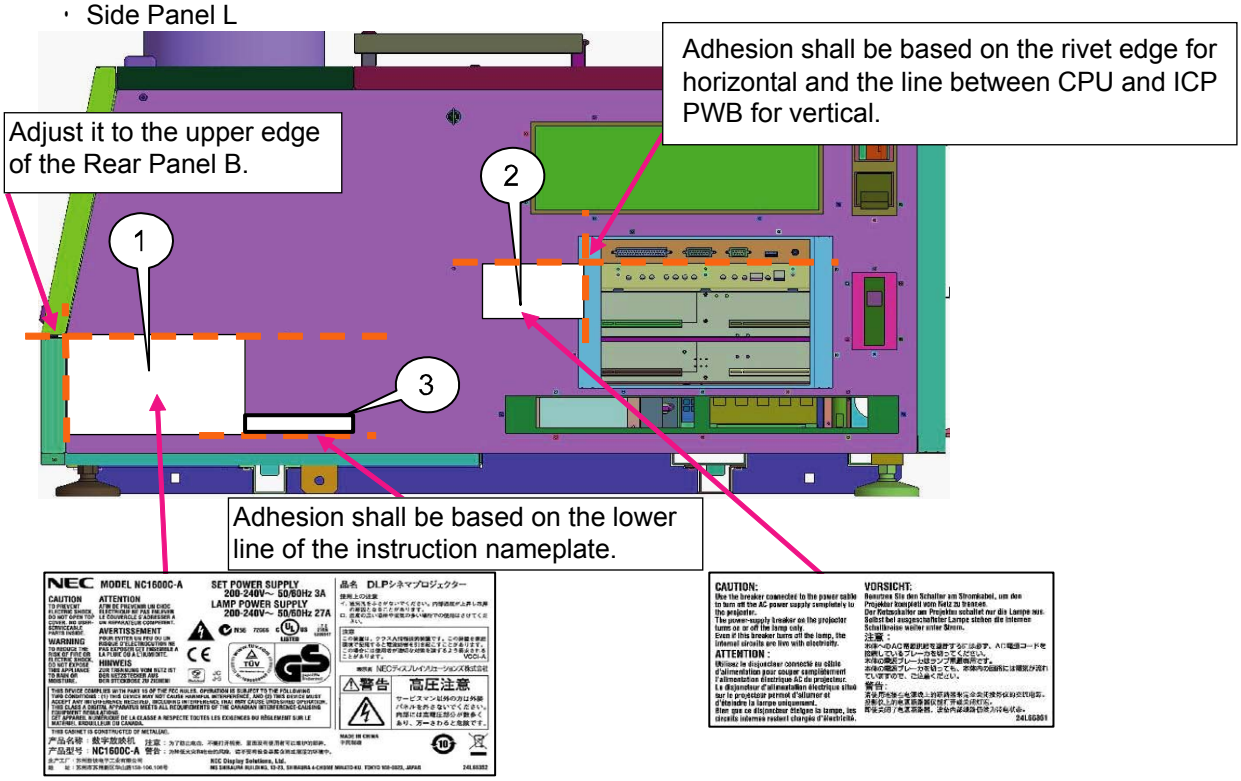

[2] Stick the caution label (LAMP) to the position specified in the illustration below.

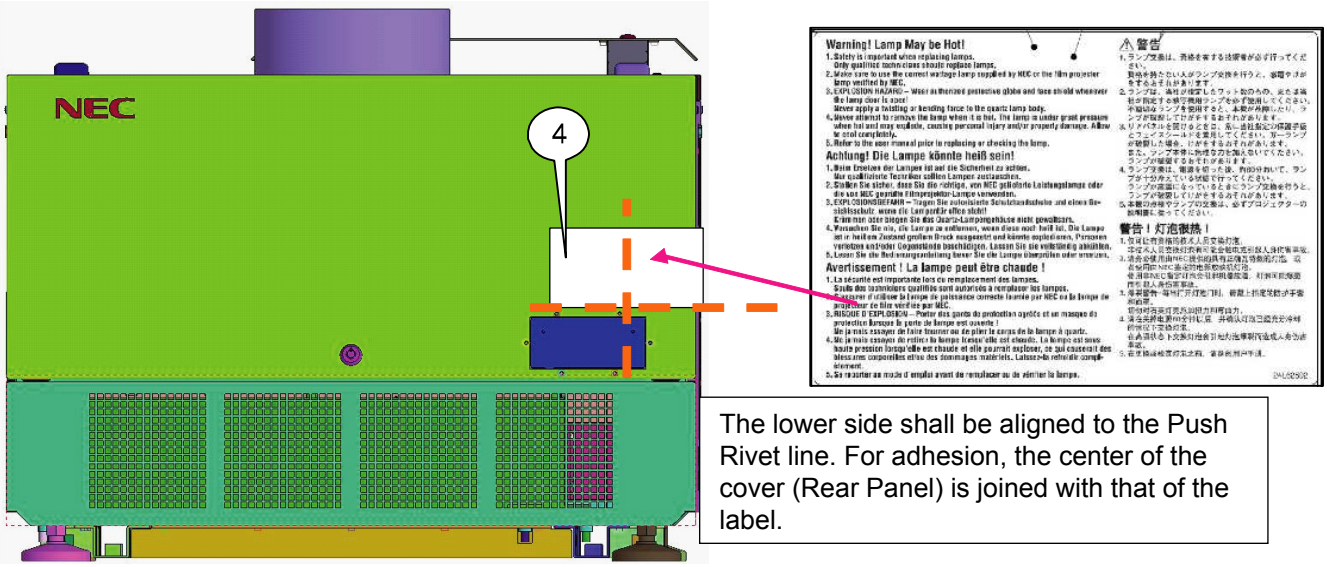

166. SET ASSY

	Diagram symbol	Circuit symbol	Part name	Part number	Q'ty	Remarks
	①	K65003	NAME PLATE(NC2000C+)	24L69811	1	
	②	K65002	CAUTION LABEL(AC POWER)	24L69121	1	
	③	K60004	LABEL SERIAL MANUFACTURE	24L62531	1	Stamped item
	④	K64006	CAUTION LABEL(LAMP)	24L69161	1	

This page is applicable only to the NC2000C+.

[1] Stick a label to the position specified in the illustration below.

・ Side Panel L

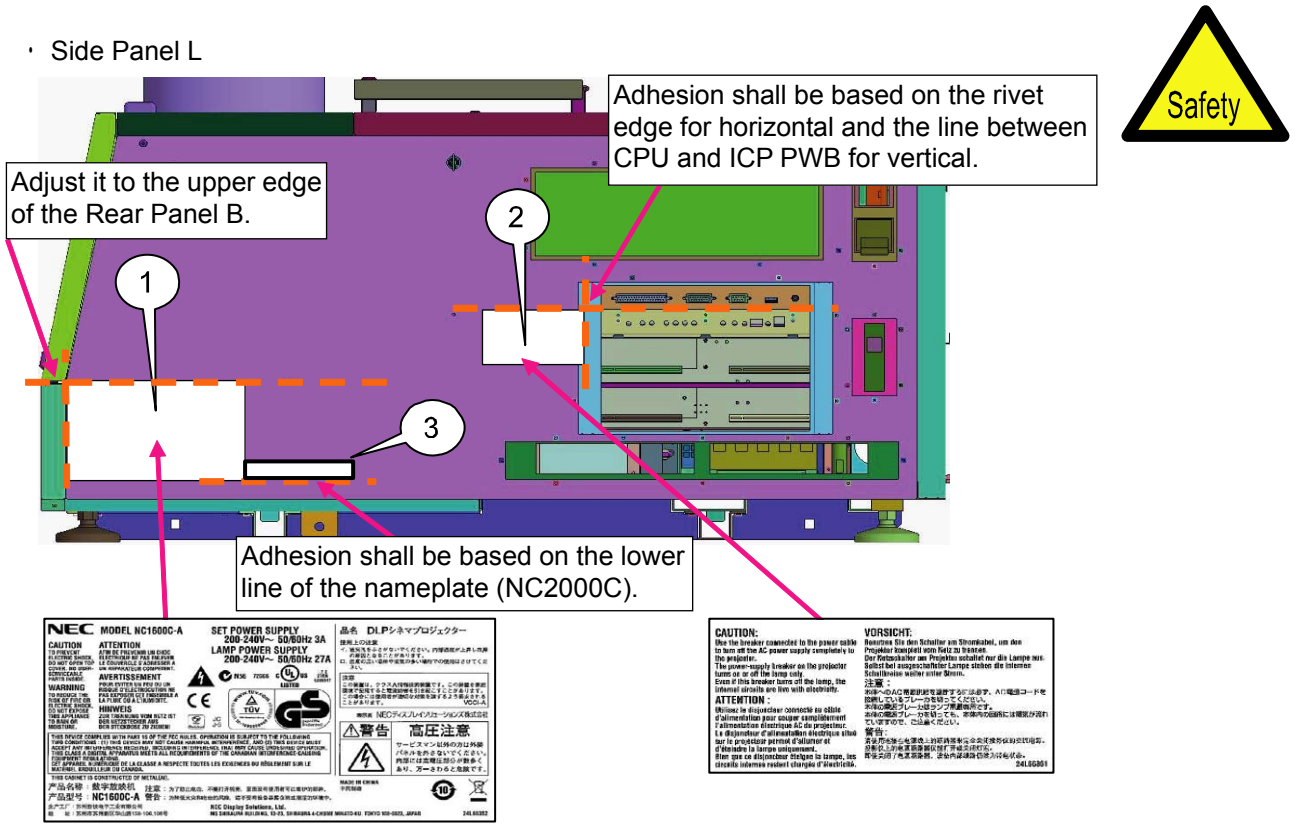

[2] Stick the caution label (LAMP) to the position specified in the illustration below.

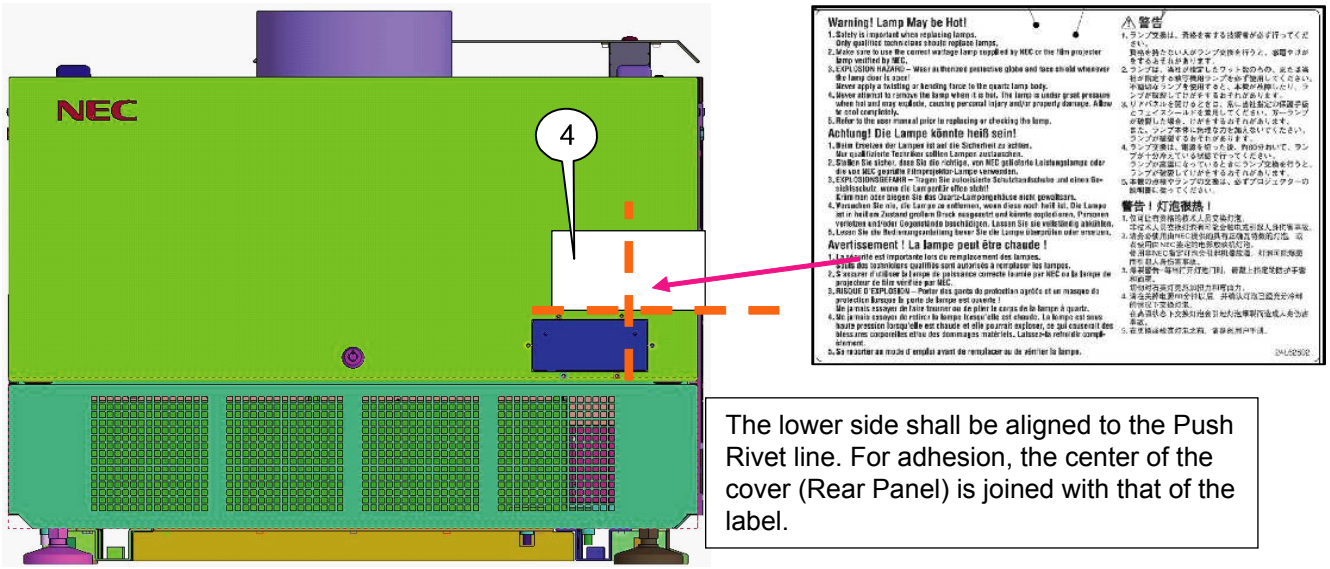

167. SET ASSY

	Diagram symbol	Circuit symbol	Part name	Part number	Q'ty	Remarks

Removal of the Lamp Bulb

The lamp-related work to be described below is carried out in an appropriate lamp mounting room for the purpose of security. Each worker is required to wear a protective mask, protective gloves, protective arm cover, and protective clothing.
Any person without wearing the above-mentioned protective clothing is prohibited to enter the lamp mounting room.

[1] Take out the bulb after the cooling process for more than 30 minutes.
After the bulb has been removed, install the lamp cover, cover (glass), and the rear cover.
Prior to starting the work below, wind a protection sheet around the glass part of the bulb, without fail, and fix the sheet with a string.
The removed lamp bulb shall be stored in a case, without removing the protection sheet.

1. Loosen four screws of the lamp cover and take out the cover.

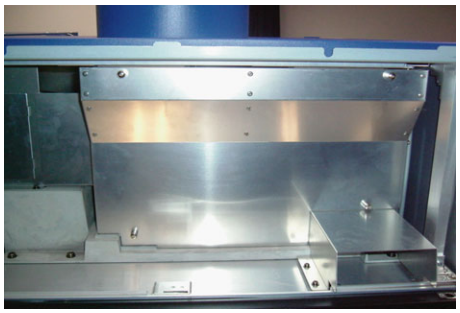

2. Pull and take out the cover (glass).

3. Remove the screw used to fasten the core cable from the lamp bulb on the outgoing radiation side. Take out the lamp bulb from the lamp cover.

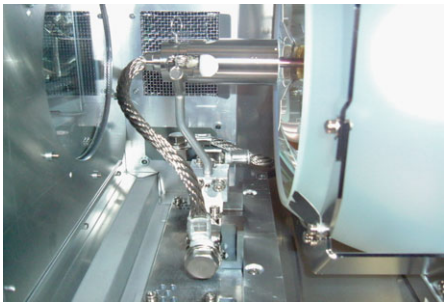

4. Loosen the hexagon socket head screw located at the lamp bulb mounting section by means of a ball screwdriver (3mm).

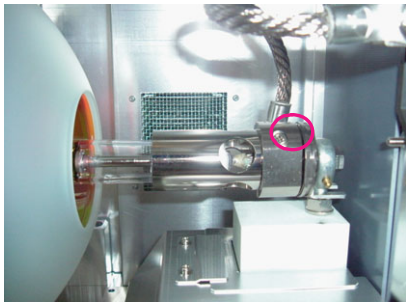

5. Hold the metallic sections on both sides of the bulb and take out the bulb from the lamp mounting section.

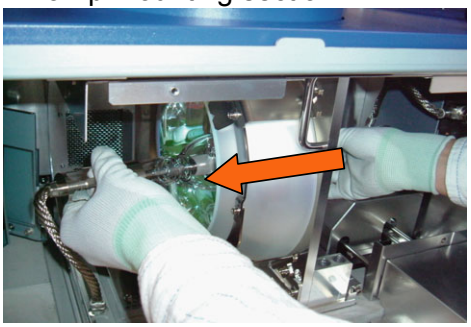

6. Pull to take out the bulb from the reflector. At that time, make sure not to hit the reflector, lamp cover, etc., with the bulb.

168. SET ASSY

	Diagram symbol	Circuit symbol	Part name	Part number	Q'ty	Remarks
	①	K60094	CAP	24J25081	1	

[1] Mount the cap.

169. PACKAGING

	Diagram symbol	Circuit symbol	Part name	Part number	Q'ty	Remarks
		K90001	CARTON BOX ASSY	24MV3061	1	
		K90002	LABEL(HDPE)	24L63251	4	
		K90003	LABEL(CARTON)T	24L69191	1	
		K90004	LABEL(CARTON)R	24L69182	1	
		K90005	LABEL(CARTON)L	24L69172	1	
		K90006	STOPPER	24282431	2	
		K90007	SHEET,PROTECTION(L=3500)	24M21161	2	
		K90008	BAND,P.PROPYLEN 15.5MM	92203857	0.0145	
		K90009	TAPE,SCOTCH NO.214	92203051	0.01	
			SERVICE BAG SASSY	82T19951	1	

This page is applicable only to the NC2000C(01154046).

170. PACKAGING

	Diagram symbol	Circuit symbol	Part name	Part number	Q'ty	Remarks
		K90001	CARTON BOX ASSY	24MV3061	1	
		K90002	LABEL(HDPE)	24L63251	4	
		K90003	LABEL(CARTON)T	24L69191	1	
		K90004	LABEL(CARTON)R	24L69182	1	
		K90005	LABEL(CARTON)L	24L69172	1	
		K90006	STOPPER	24282431	2	
		K90007	SHEET,PROTECTION(L=3500)	24M21161	2	
		K90008	BAND,P.PROPYLEN 15.5MM	92203857	0.0145	
		K90009	TAPE,SCOTCH NO.214	92203051	0.01	
		K90010	LABEL (+)	24L68361	2	
			SERVICE BAG SASSY	82T19951	1	

This page is applicable only to the NC2000C+(01154052).

Detailed packing diagram 1.

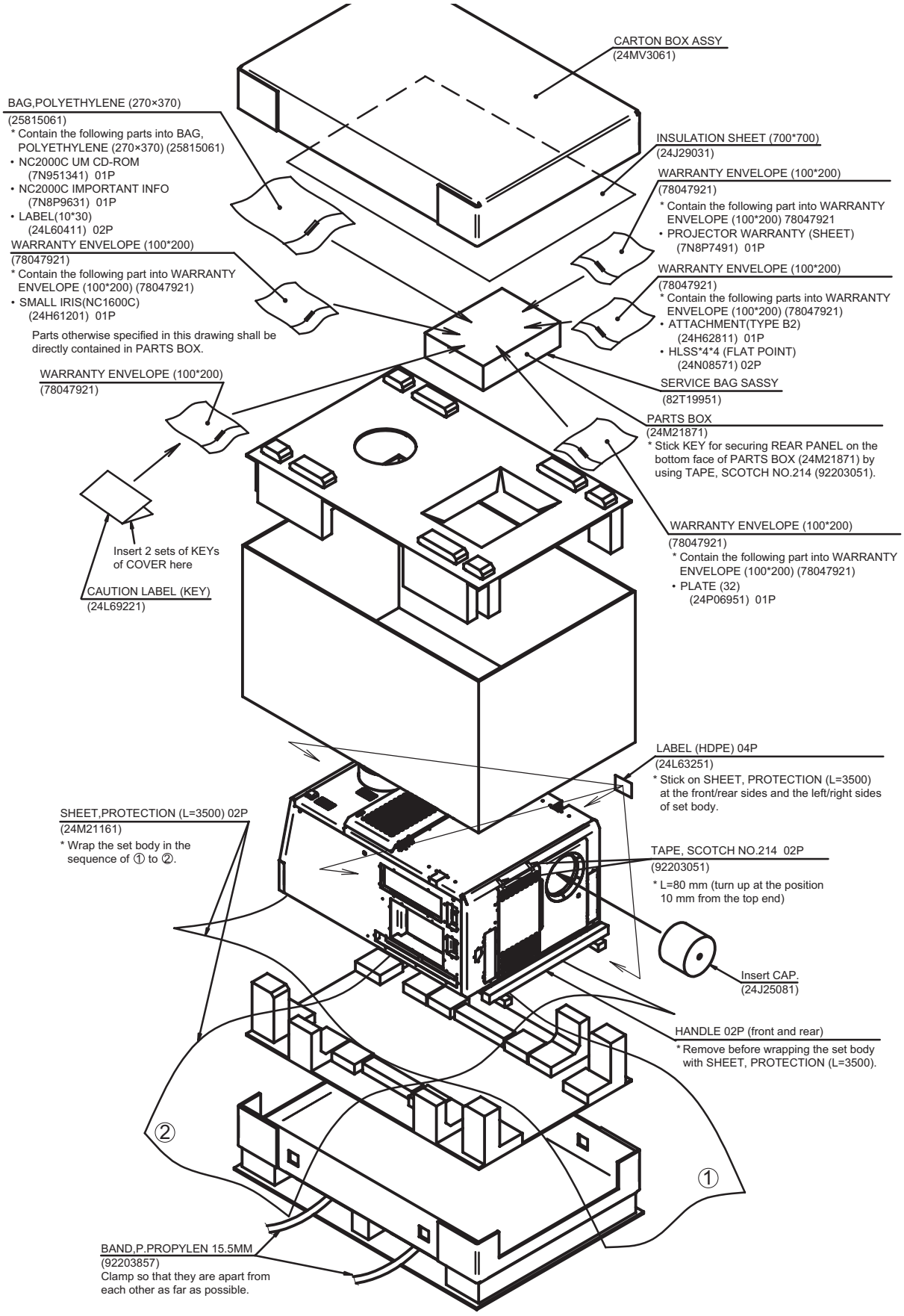

At the last, wind the set body with PP BAND and tighten by using STOPPER (24282431).

Detailed packing diagram 2.

LABEL Locations (Front side is defined as where the lens of set exists)

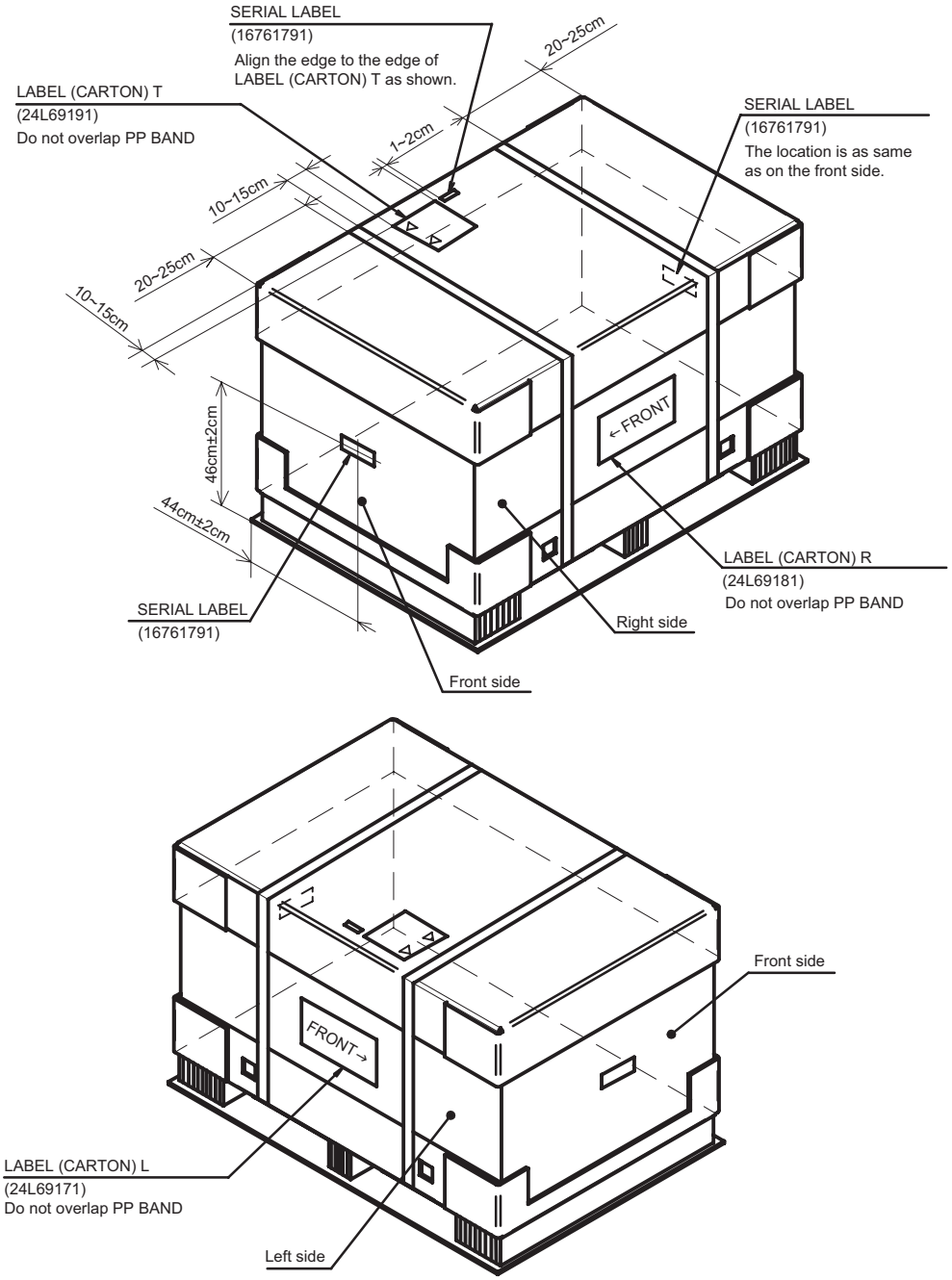

- SERIAL LABELs (16761791) shall have required information printed on it and shall be stuck on LABEL (CARTON) L and R which are stuck on side faces of CARTON.
  (Stick within the frames)
  They shall be stuck on the top, left and right face, and positioned as shown in the drawing above.

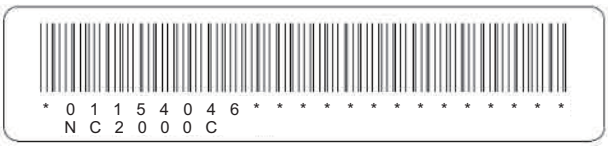

Spare parts list
NC2000C

ITEM	PART NO.	DESCRIPTION	REMARK
1	12JS0272	COLD MIRROR	
2	12JT1791	UV GLASS(PA67)	
3	12JT2301	REFLECTOR(PA67)	
4	24280701	BAND (L=100)	
5	24BS7795	LENS MOUNT(PA67)	
6	24BS7881	INSULATOR(NC2500S)	
7	24BS7941	OPT ENGINE(PA76)	
8	24BS7952	WATER COOLED UNIT(NC20)	
9	24BS8081	TRIAXIAL STAGE(NC1600C)	
10	24C02841	CABLE CLIP(FCA-10)	
11	24C06931	RIVET,PUSH(NRP-345)	
12	24C07621	PLUNGER(PH-48)	
13	24C07691	GROMMET(G-50)	
14	24C08381	STRAP(1K-57)	
15	24C08451	SPRING(WM6-10)	
16	24C08531	HANDLE(THA-31SUS-5)	
17	24C08881	FOOT(RP-70M14)	
18	24C09081	LOCK(TL-225)	
19	24C09131	LOCK(TL-96L)	
20	24C09141	CUSHION	
21	24C09721	ROLLER(TM-86-A-1)	
22	24C09731	SPRING(UF10-30)	
23	24C09761	LATCH(TL-304-2)	
24	24C09821	GASKET(STG1-3 L=280)	
25	24C09841	GASKET(STG10-10 L=85)	
26	24C09851	GASKET(STG3-5 L=120)	
27	24C09861	GASKET(STG3-5 L=100)	
28	24C09881	GASKET(STG10-10 L=120)	
29	24C09951	GASKET(STG0.5-8 L=250)	
30	24C09961	GASKET(STG6-10 L=100)	
31	24D15541	COVER(F-FILTER)	
32	24F45841	INDICATOR	
33	24H62811	ATTACHMENT(TYPE B2)	
34	24H63751	ADJUST SCREW	JIG
35	24H68231	SLIDE PLATE	
36	24H68241	BRACKET(GUIDE)L	
37	24H68251	BRACKET(GUIDE)R	
38	24H68262	SHAFT(LOCK)	
39	24HS4202	HANDLE(PRISM)ASSY	JIG
40	24HS4952	SLIDE(TOP)ASSY	
41	24J25081	CAP	
42	24J35391	CUSHION SHEET(RADIATOR)A	
43	24J35401	CUSHION SHEET(RADIATOR)B	
44	24L69111	INSTRUCTION NAME PLATE	
45	24L69121	CAUTION LABEL(AC POWER)	
46	24L69161	CAUTION LABEL(LAMP)	
47	24N05081	HHCS*3*6*3GF	
48	24N08431	SPECIAL SCREW(M4*18)	
49	24N08571	HLSS*4*4(FLAT POINT)	
50	24P06411	TOP PANEL R	
51	24P06461	COVER(REAR PANEL)	
52	24P06471	COVER(AT)	
53	24P06481	COVER(FILTER)F	
54	24P06501	COVER(FILTER)T	
55	24P06512	COVER(MM)	
56	24P06521	COVER(TOP)F	
57	24PS5801	FRONT PANEL ASSY	
58	24PS5812	SIDE PANEL R ASSY	
59	24PS5822	SIDE PANEL L ASSY	
60	24PS5831	TOP PANEL F ASSY	
61	24PS5841	REAR PANEL T ASSY	
62	24PS5851	REAR PANEL B ASSY	
63	24PS5861	SIDE PANEL RF(CABLE)ASSY	

64	24PS5871	COVER(LENS)ASSY	
65	24PS5881	COVER(TOP)ASSY	
66	24PS5892	DUCT(TOP) ASSY	
67	24V00111	SCREW,PL-CPIMS*3*8*3GF	
68	24V00151	PL-CPIMS*5*12*3KF	
69	24V00591	PL-CPIMS*4*8*3GF	
70	24V00661	PIWA*4*3GF	
71	24V00871	PIWA*6*3KF	
72	3N101251	IGNITER SS-140GMNE	
73	3N101401	POWER SUPPLY AC6-O2H2E-00	
74	3N170149	DCFAN 9G0824G105	
75	3N170150	DC FAN F0628-C12U	
76	3N170151	DC FAN 3610KL	
77	3N170152	DCFAN 4715KL	
78	3N170153	DC FAN 2004KL	
79	3N170154	DCFAN 2406KL-05W-B59-L54	
80	3N190011	POWER SUPPLY KSX-4001MPNE	
81	6N500027	1120-F150-P1T1-WB0000-10A	
82	79TDD021	SENSOR (H) PWB ASSY	LENS MOUNT(PA67) (24BS7795) CONFIGURATION PARTS
83	79TDD031	SENSOR (V) PWB ASSY	LENS MOUNT(PA67) (24BS7795) CONFIGURATION PARTS
84	79TDD042	MOTOR PWB ASSY	LENS MOUNT(PA67) (24BS7795) CONFIGURATION PARTS
85	79TDD051	SHUTTER ASSY	LENS MOUNT(PA67) (24BS7795) CONFIGURATION PARTS
86	79TDD081	MOTOR (LENS SHIFT V) ASSY	LENS MOUNT(PA67) (24BS7795) CONFIGURATION PARTS
87	79TDD091	MOTOR (LENS SHIFT H) ASSY	LENS MOUNT(PA67) (24BS7795) CONFIGURATION PARTS
88	79TDD101	PAD RUBBER	LENS MOUNT(PA67) (24BS7795) CONFIGURATION PARTS
89	7N120016	DFU-50X2P+MBT-60AEX1P	
90	7N520076	CABLE LAN JACK 0.70M (ACC	
91	7N8P9632	NC2000C IMPORTANT INFO	
92	7N951341	NC2000C UM CD-ROM	
93	7N951411	ICP 2509274-0004	INTEGRATED CINEMA PROCESSOR BOARD
94	7N951421	ENIGMA 2509488-0002	
95	7N970101	CONTROL PANEL	
96	7N970045	LCD MSC-C164DYLY-2N-E	
97	7N970083	BLHD50K-K6	
98	7N970091	BROADBAND ROUTER ETG-RN	
99	7N970103	THERMOSTAT CS-7SA-95A	
100	7NA5N002	CN5-WP(AC8)280W,1015-18	
101	7NN1N054	CN WIRE(FG1)170W,1283-8	
102	7NN2N011	CN2P(AC4)500W,1283-8	
103	7NN2N012	CN2P(AC5)1200W,1015-12	
104	7NWLV005	CN24-WP(PF)250X 1007-22	
105	7NWLW055	CN40P(IF)150W,1571-28	
106	7NWLW057	NC30P(SF)400W 1061-28	
107	7NWLW058	CN30P(SF1)400W 1061-28	
108	81N94B01	FSBB_PWB PWB ASSY	
109	81N94R01	FSBR_PWB PWB ASSY	
110	81T19C02	CPU PWB ASSY	
111	81T19L01	LEGACY PWB PWB ASSY	
112	81T19MA1	MOTHER PWB ASSY	
113	81T19MB1	INTERVENE PWB ASSY	
114	81T19Y01	PJDIV PWB ASSY	
115	81T19ZA1	KEY-I/O PWB ASSY	
116	81T19ZAA	TSENS-A PWB ASSY	same board #1
117	81T19ZAB	TSENS-B PWB ASSY	
118	81T19ZAC	TSENS-C PWB ASSY	
119	81T19ZAD	TSENS-D PWB ASSY	
120	81T19ZAE	TSENS-E PWB ASSY	
121	81T19ZAF	TSENS-F PWB ASSY	
122	81T19ZAG	TSENS-G PWB ASSY	
123	81T19ZAH	TSENS-H PWB ASSY	
124	81T19ZB1	AC PWB ASSY	
125	81T19ZBA	TAMPER-A PWB ASSY	same board #2
126	81T19ZBB	TAMPER-B PWB ASSY	
127	81T19ZBC	TAMPER-C PWB ASSY	
128	81T19ZBD	TAMPER-D PWB ASSY	
129	81T19ZBE	TAMPER-E PWB ASSY	

130	81T19ZC1	COVER PWB ASSY	
131	81T19ZD1	PEDE-A PWB ASSY	
132	81T19ZF1	SLED-A PWB ASSY	
133	81T19ZG1	SLED-B PWB ASSY	
134	81T19ZH1	LSENS PWB ASSY	
135	81T19ZJ1	INTER PWB ASSY	
136	81T19ZK1	LIGHT PWB ASSY	
137	81T19ZN1	ACS PWB ASSY	
138	82N94121	PRISM ASSY	
139	92201082	GLUE,SCREW LOCK	
140	92203051	TAPE,SCOTCH NO.214	
141	92203961	TAPE,SCOTCH SUPER10	
142	92339589	POLYCABONATE FACE GUARD	JIG
143	92339590	KEVLER GLOVE	JIG
144	9R020001	SILICON OIL COMPOUND G747	
145	9R030010	ACETATE CLOTH TAPE 570F	
146	9R030011	CONDUCTIVE CLOTH TAPE E05	

OPTIN

Model name	Product number	Product name	REMARK
NC-60LS13Z	01165145	Zoom Lens 1.30 to 1.75:1	Lens
NC-60LS14Z	01165167	Zoom Lens 1.40 to 2.05:1	
NC-60LS16Z	01165161	Zoom Lens 1.59 to 2.53:1	
NC-60LS19Z	01165162	Zoom Lens 1.90 to 3.25:1	
NC-60LS24Z	01165147	Zoom Lens 2.4 to 3.9:1	
NC-60LS39Z	01165168	Zoom Lens 3.9 to 6.52:1	
NC-80LS13F	01165169	Wide Converter Lens X 1.26	
NC-AT02	01165126	Anamorphic turret	Anamorphic lens motorized turret
NC-16LP401	01165148	4.0kW Lamp	Lamp
NC-16LP402	01165149	4.0kW Lamp (Long life type)	
NC-16LP401S	01165173	4.0kW Lamp	
NC-PD02	01165154	Pedestal	Dedicated base
NC-80AF01	01165176	Air Filter (For the lamp)	Replacement air filter
NC-80AF02	01165180	Air Filter (For the projector)	
NC-16RD02	01165157	Rear Duct Unit	Rear ventilation unit
MM3000B	01165160	Built-in type Multi-Media Switcher	Built-in type multi-media switcher
MM-70DV01	01165152	DVI (HDCP) Input Board	Interface board (DVI HDCP)
MM-SDI	01160092	SDI Input Board	Interface board (SDI)
MM-RGB	01160091	Analogue RGB Input Board	Interface board (RGB)
MM-VIDEO	01160098	Video Input Board	Interface board (VIDEO)

When you need P/O the OPTION PARTS.
Pleas contact to Sales Departument.

NC2000C Connection Diagrams

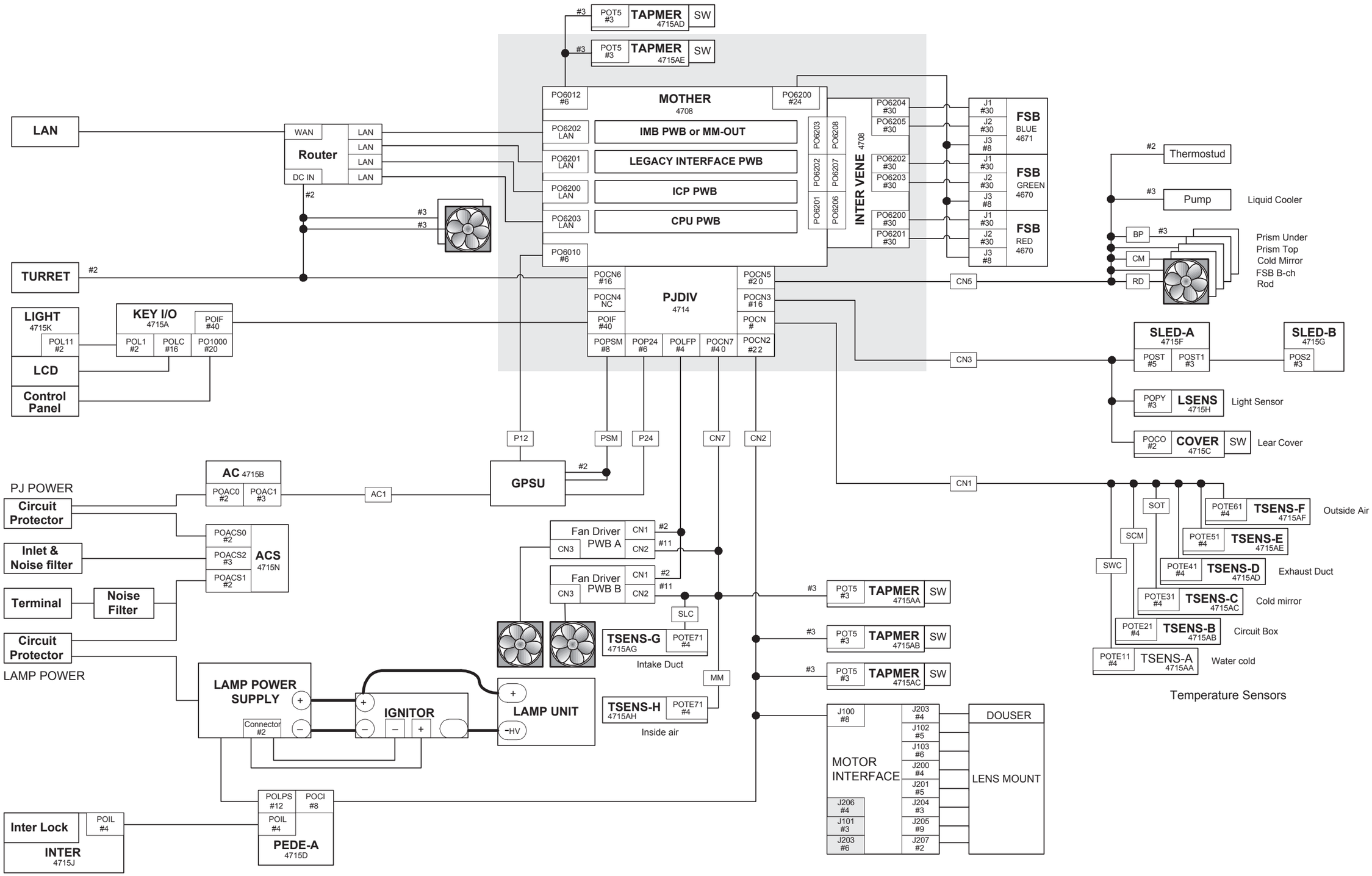

NC2000C Block Diagrams

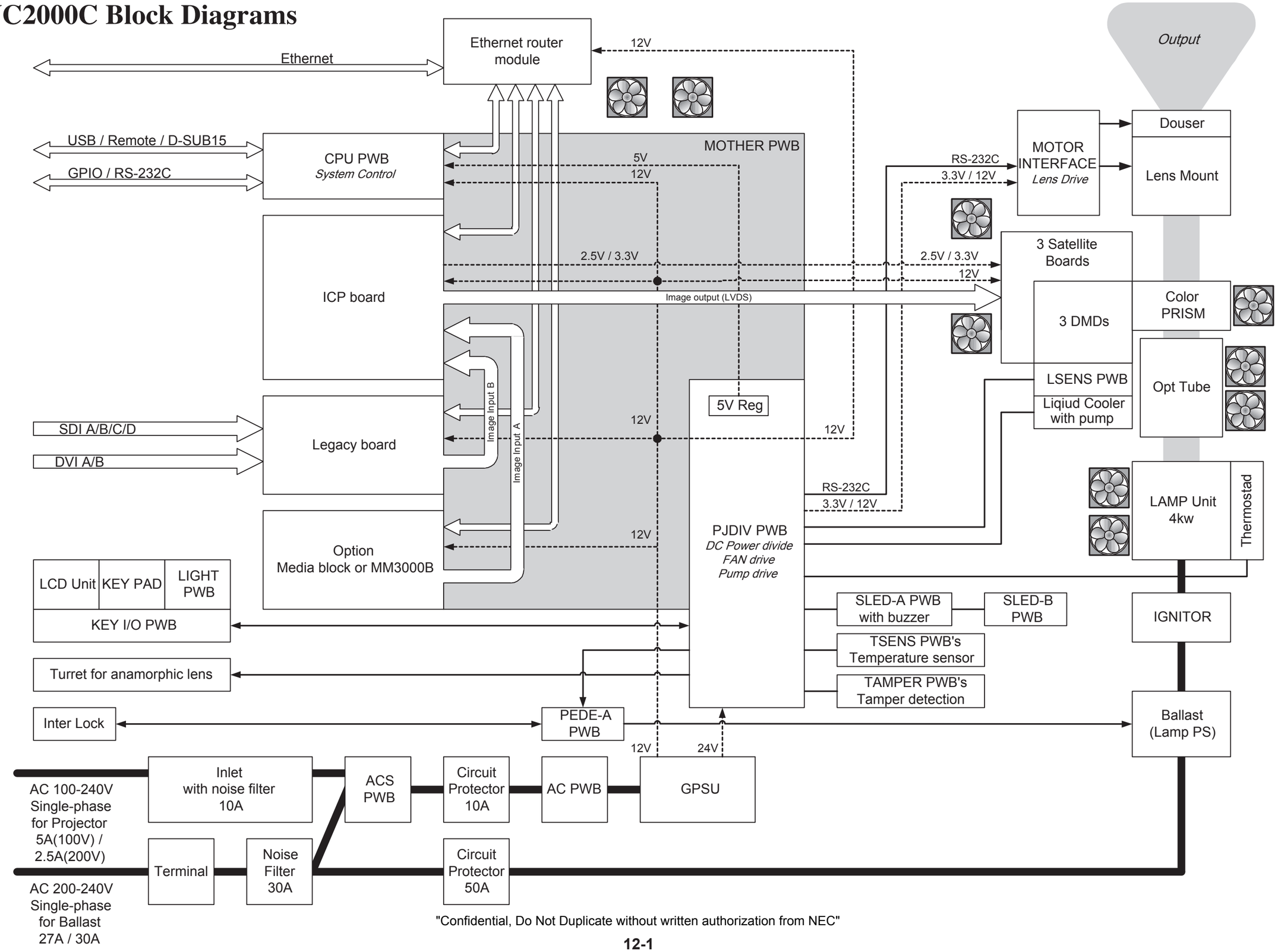

NC2000C Optional Lamp Bulb, Replacement Procedure and Cautions

Replacement of the LAMP bulb shall be carried out, without fail, by an authorized person.
Unauthorized persons are prohibited to carry out this work.

Be sure to follow the procedure below for replacement of NC2000C optional lamp bulb. Failure to observe these instructions may result in trouble including injuries, burns, and blindness. Therefore, adhere to the procedures without fail.
We shall have no liability for any damage of any kind caused by nonconformity with this instruction manual and the cautions.
Refer to the replacement procedure and cautions regarding each lamp bulb for replacing other lamp bulbs.

– Replacement Procedures –

Be sure to read the sections 1 and 2 below carefully before replacement of optional lamp bulbs.

■ Preparations and precautions

1. Preparations

(1) Protection

Constantly pressurized lamp bulb poses the risk of a burst. The risk increases regarding the lamp bulb lasting for more than the average life due to glass degradation. When the rear panel of the main unit is opened and the lamp bulb is connected or disconnected, be sure to wear a protection mask, protection gloves, and long-sleeved heavy clothes.
The protection mask and protection gloves are available as a service part with the product numbers shown below. Long-sleeved heavy clothes shall be prepared at user's side.

POLYCABONATE FACE GUARD : (92339589) PROTECTION GLOVE (KEVLER GLOVE) : (92339590)

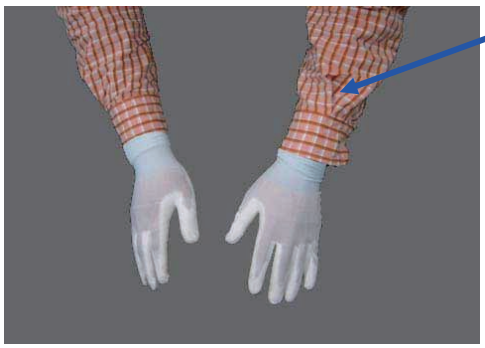

(2) Special tools

The following special tools are required for lamp bulb replacement.
Each special tool is available as a service part with the product number shown below.

Socket wrench (17 mm):
Ball driver (3 mm):
Ball driver (5 mm):
Phillips screwdriver

2. Cautions

(1) Transport and storage of lamp bulb

Put a lamp bulb in the specialized plastic protection case and then put it into the corrugated cardboard packaging box for transport and storage of lamp bulbs in a working space. Point the bigger electrode side downward as shown in the illustration on the packaging box. Be sure to keep the surface marked with "UP" up when the box is transported and stored.

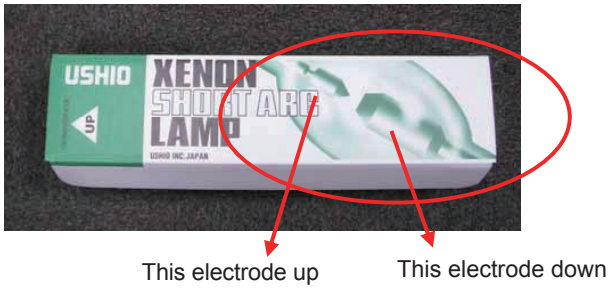

(2) Lamp bulb replacement

Warning 1:
Never turn on the lamp before closing the rear panel completely. Do not see the light of the lamp directly while the lamp is turned on for optical axis adjustment.

Warning 2:
To avoid electric shock, be sure to turn off the lamp and the power of the system before lamp bulb replacement.

Warning 3:
The lamp house in operation is considerably hazardous. Handle the lamp house after letting it cool to room temperature for burn prevention.
As a lamp bulb cooling guideline, wait for more than 60 minutes after fan stops by turning off the lamp, then handle the lamp house after ensuring that the lamp bulb and lamp house cool down sufficiently.
This electrode up This electrode down

Warning 4:
Constantly pressurized lamp bulb poses the risk of a burst. Lamp bulb dropping, even 10 cm in height, may result in a burst. In addition, the impact between the bulb and the metal part of the lamp cover or other hard parts may result in a burst.
When system maintenance is performed, be sure to wear a protection mask, protection gloves, and long-sleeved heavy clothes, and handle the lamp bulb after letting it cool to room temperature to avoid injuries and damages to the system.

Caution 1:
Never touch the glass parts of the lamp bulb. Failure to observe this may degrade the performance and life of the lamp bulb. In case of touching with hand or becoming dirty, wipe the part with clean MIRACLE CLOTH containing dehydrated alcohol. MIRACLE CLOTH is available as a service part with the product number shown below.
MIRACLE CLOTH: (92339585)

Caution 2:
The use of a lamp bulb other than specified one or an unauthorized modified lamp bulb may result in serious malfunctions or defects in safety and quality. Be sure to use the specified lamp bulb and follow this instruction manual and the cautions.

■ Replacement procedures

1. View the operating times of the lamp bulb and reflector on the display screen of the main unit and note down them (refer to the installation manual for how to call up operating time).

2. Open the rear panel of the main unit. Use the attached key.

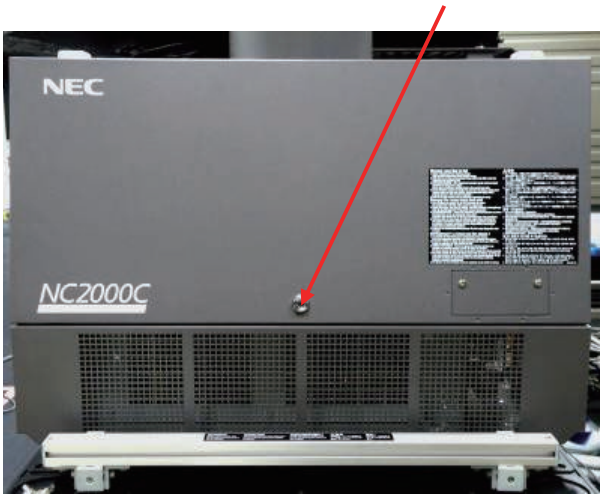

3. Loosen four screws of the lamp cover and remove the cover.

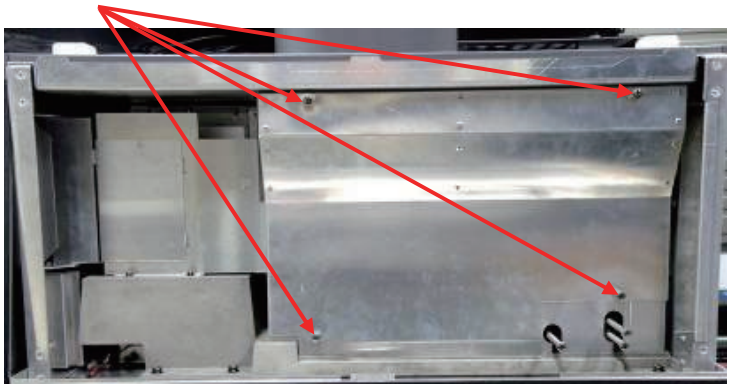

4. Pull out the cover glass toward you and take it out.

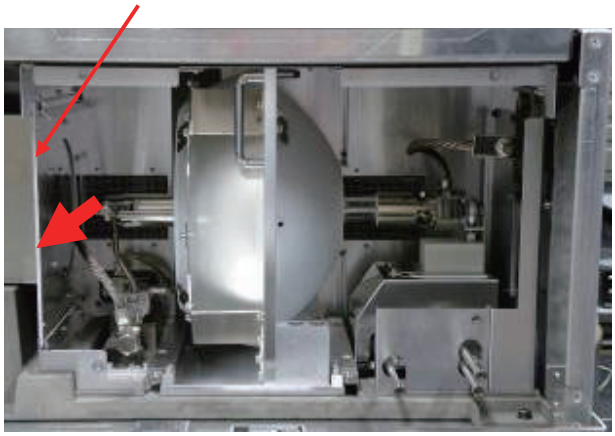

5. Fill in the operating time of the lamp bulb that you noted down on the "Lamp replacement time" label stuck to the front side of the lamp cover. If the total operating time on the label is more than 8,000 hours, this means the recommended replacing time for the reflector. In this case, replace the lamp bulb together with the reflector. However, if users manage the lamps independently in a movie theater or the like, for example, replace the reflector when the total operating time of the lamp bulb specified on the "Lamp operating time" management table or the "Lamp replacement time" label has exceeded 8,000 hours, whichever is earlier.
   We do not guarantee against any degradation in luminance and other performance if lamp house replacement is not performed after the lamp house has been used for more than 8000 hours.

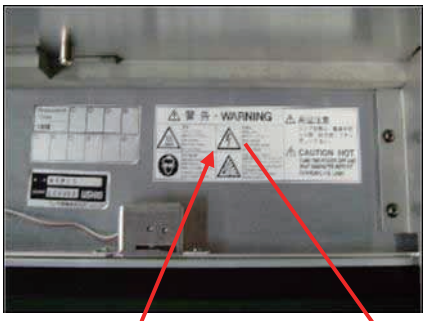

Lamp replacement time

Enlarged

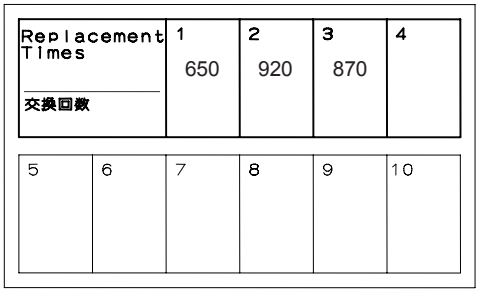

Replacement Times 交換回数	1	2	3	4
	650	920	870	

5	6	7	8	9	10

6. Remove the screw securing the core wire from the lamp bulb at the outlet side with a 17 mm socket wrench to remove the core wire from the lamp house.

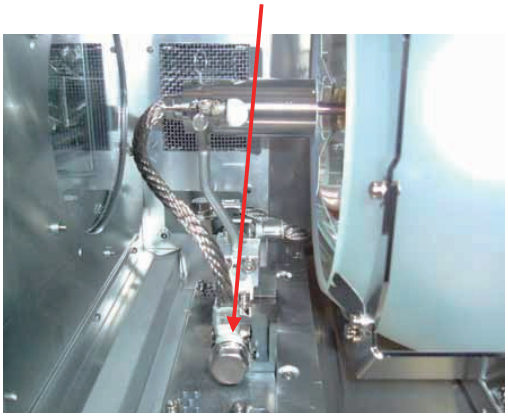

7. Loosen the hexagon socket head cap screws (4mm) at the lamp bulb connecting part with the ball driver (3 mm).

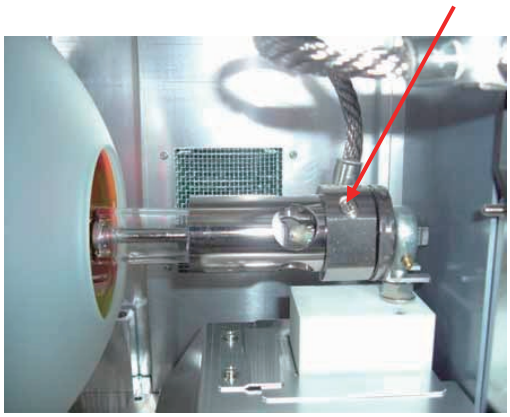

8. Remove the lamp bulb from the lamp bulb connecting part with holding the both metal parts of the bulb.

Remove the bulb from the reflector.
Exercise care to avoid hitting the bulb against the reflector, lamp cover, or other hard parts.

Never touch the glass parts of the lamp bulb and the reflector mirror surface. In case of touching them, wipe the parts as per Caution 1.

9. Put the removed lamp bulb in the specialized case (this case was used to contain the lamp bulb at the time of purchase) and lock the case.
   Then, put the case in the specialized packaging box.
   Follow the Caution 1 for packaging, transporting, and storing.

Specialized case

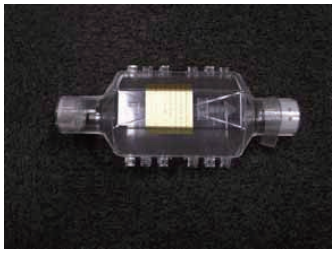

Specialized packaging box

10. Perform the procedure of new lamp bulb connection that is the reverse of the removal.
    Step order: 8 → 7 → 6 → 5 → 3 → 2 → 1
    (Caution in Step 8)
    Exercise care to avoid hitting the bulb against the reflector, lamp cover, or other hard parts.
    Never touch the glass parts of the lamp bulb and the reflector mirror surface.
    (Caution in Steps 6)
    Run the core wires carefully according to the notes below.
    (1) There is no contact between the core wire and lamp house.
    (2) The surface of the core wire shall seat below the head of the screw.

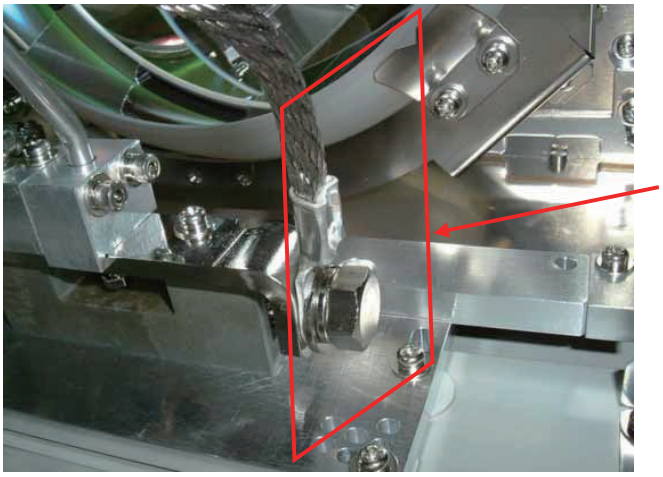

11. Make an entry of a new lamp bulb on the display screen of the main unit (refer to the installation manual for the method).

12. After lamp bulb replacement, turn on the power of the main unit and repeat 15-minute ON and 5-minute OFF twice to make sure that the replacement has been successfully performed.

13. Adjust the optical axis of the lamp bulb.
    Turn on the power of the main unit, and the lamp lights.
    (1) Remove the optical axis adjustment cover from the rear panel of the main unit (2 pieces of screws).

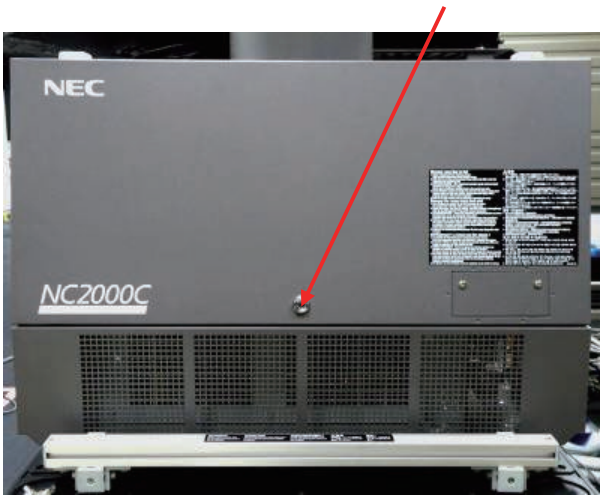

(2) Call up "Bulb Alignment" on the menu of the main unit (refer to the installation manual for the call-up method).
Turn the axis adjustment screws with a 5 mm balldriver to set the displayed value to the maximum. Adjust all of 3 adjustment screws (X-, Y-, and Z-axes).

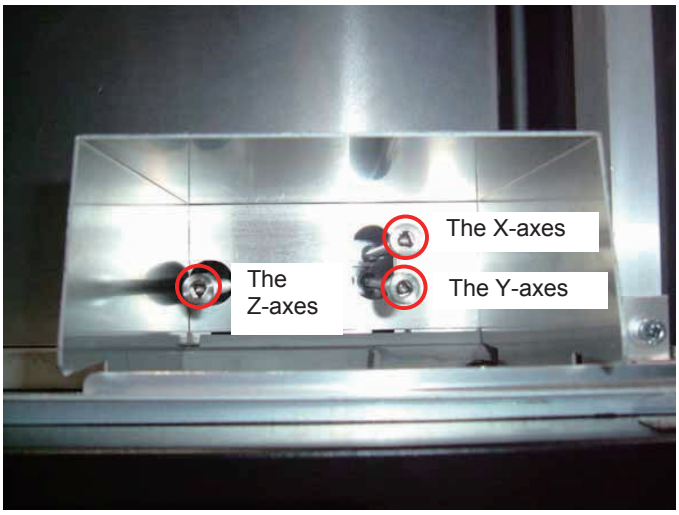

(3) Put the cover on and turn off the power of the main unit.

14. Disposal procedure
    Used lamp bulbs including high-pressurized xenon gas have the risk of a burst. Be sure to break the glass parts of the bulbs before disposal.
    The disposal procedure is described below.
    (1) Put a used lamp bulb in the specialized protection case and lock the case without fail.
    (2) Put the specialized protection case in the specialized packaging box, and tape it tightly to prevent the box from opening.
    (3) Hold the packaging box at a height of approximately 1 meter horizontally and drop it to the hard floor.
    (4) Shake the box to make sure that the lamp bulb is broken.
    (5) Dispose of the bulb as industrial waste. In this regard, follow your local rules and regulations as required.

That's all

How to Replace Air Filter (excerpt from operational instruction)

5-3. Replacing the Air Filter

Air filters are attached over the air inlet of the projector to prevent dust. Replace air filters periodically to maintain the projector's performance.

⚠ WARNING:

- When replacing air filters, turn off the projector and shut down the AC power to the projector using a circuit breaker.
- Dust in air filters will hinder ventilation of the projector, lead to a rise of the internal temperature and may cause a fire or malfunction.

NOTE Please purchase the replacement air filter at your dealer/distributor. Specify NC-80AF01 (for the air inlet of the lamp) or NC-80AF02 (for the air inlet of the projector electric circuit) when you order.

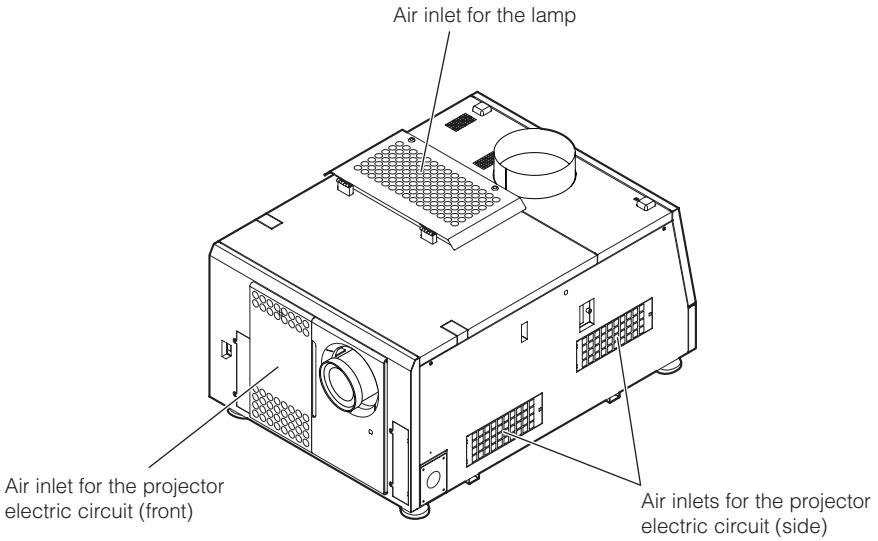

Air inlet	Model number	Replacement frequency
Lamp air inlet	NC-80AF01	When replacing the lamp
Projector air inlet	NC-80AF02	Every 2,000 hours of usage or 6 months, whichever is earlier

5-3-1. Replacing air filters for the lamp air inlet

Prepare the optional NC-80AF01 to replace air filters for the lamp air inlet. The NC-80AF01 contains six replacement air filters. Two air filters are required for the lamp air inlet.

1 Turn off the power to the projector.

2 Open the air inlet cover.

The air inlet cover is fastened by a leg on the top left corner of the cover when the project is facing towards you. Lift the leg up to open the air inlet cover.

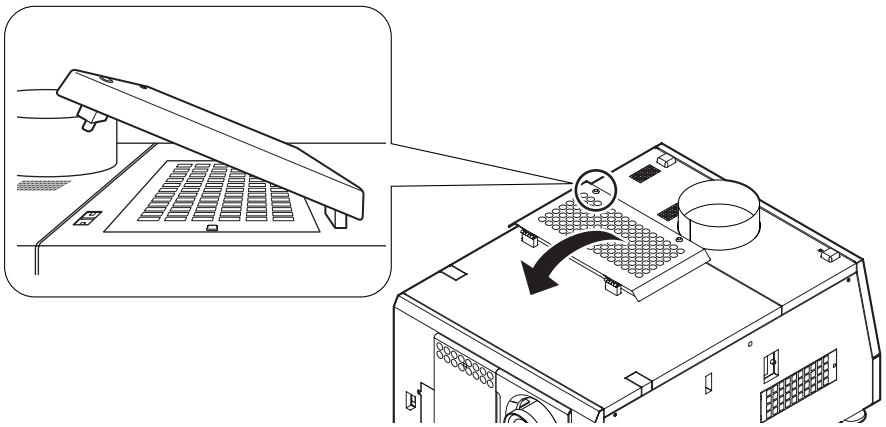

NOTE Take care not to damage the upper surface of the projector when opening the air inlet cover.

3 Remove the filter cover.

Push the latch until it clicks to unlock the filter cover.

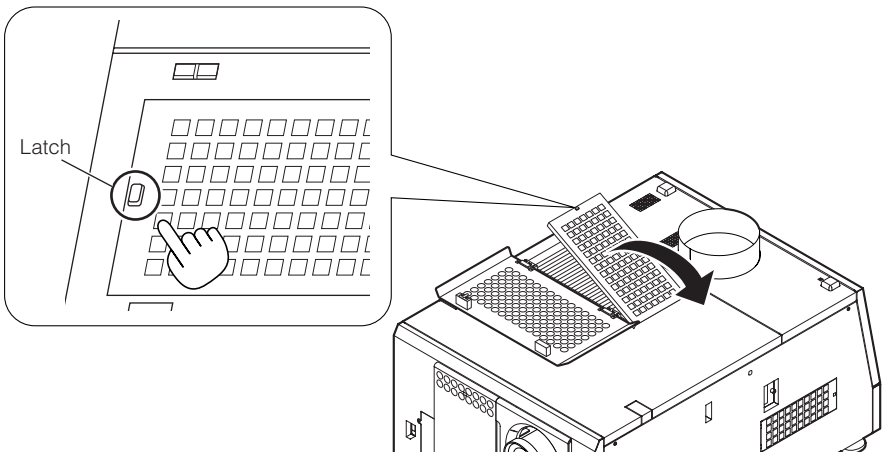

4 Replace with new air filters.

Look for an arrow indicating the installation direction on the side of the air filter. Place the filter so that the arrow is pointing down at the projector.

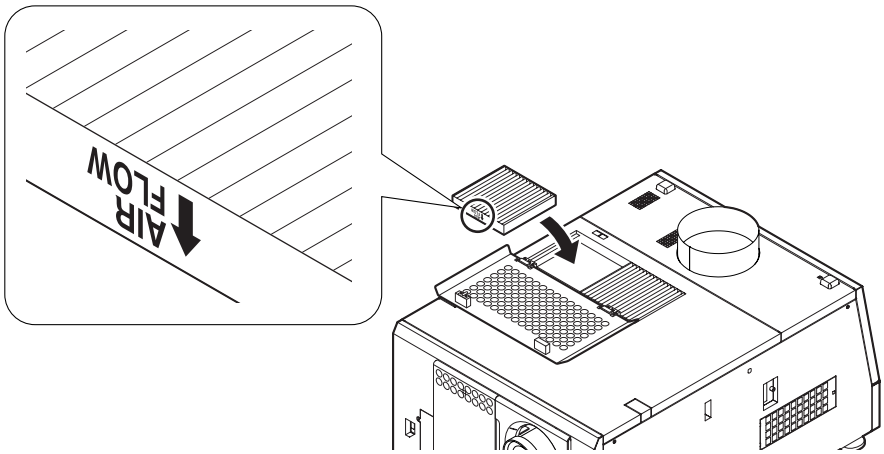

5 Mount the filter cover.

Align two fasteners on the filter cover to holes on the projector, and push in until the latch clicks to mount the filter cover.

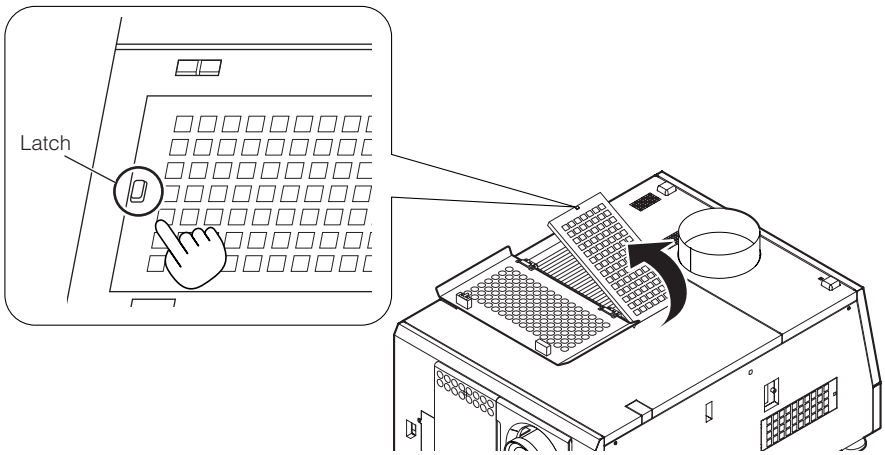

6 Close the air inlet cover.

Fasten the air inlet cover by inserting the protrusion on the top left leg into the hole on the projector when the projector is facing towards you.

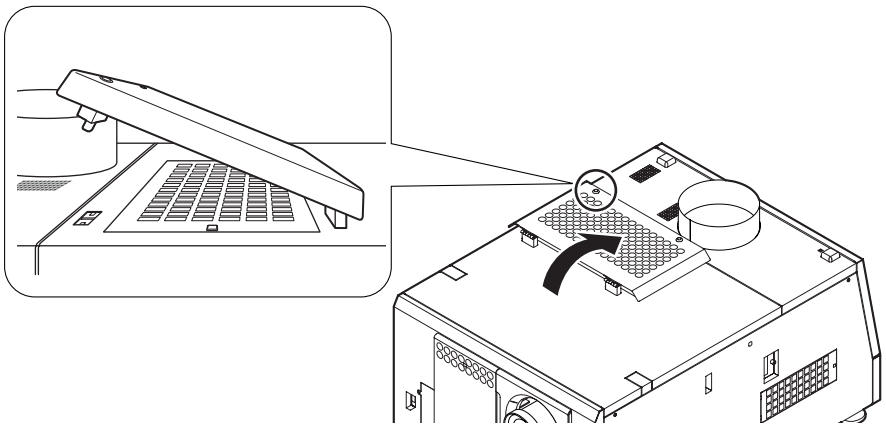

This completes replacement of the air filters for the lamp air inlet.

5-3-2. Replacing air filters for the projector air inlet on the front

Prepare the optional NC-80AF02 to replace air filters for the projector air inlet on the front. The NC-80AF02 contains four replacement air filters. Two air filters are required for the projector air inlet on the front.

1 Turn off the power to the projector.

2 Remove the air inlet cover.

Push the latch until it clicks to unlock the air inlet cover. The air inlet cover is attached to the projector by the bottom edge.

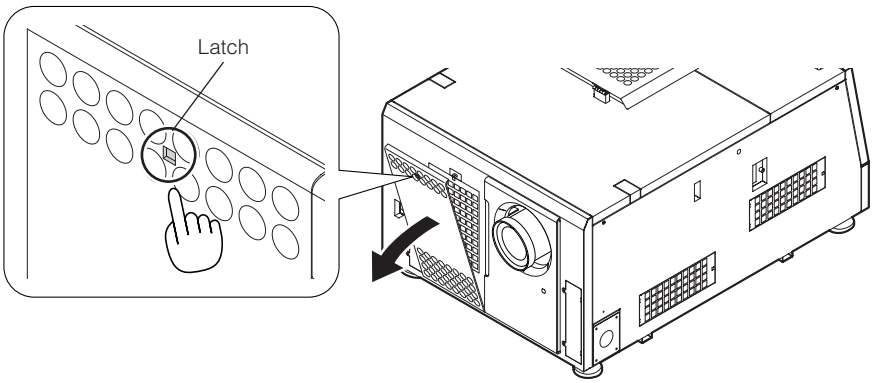

NOTE Take care not to drop the cover when removing the air inlet cover.

3 Remove the filter cover.

Push the latch until it clicks to unlock the filter cover.

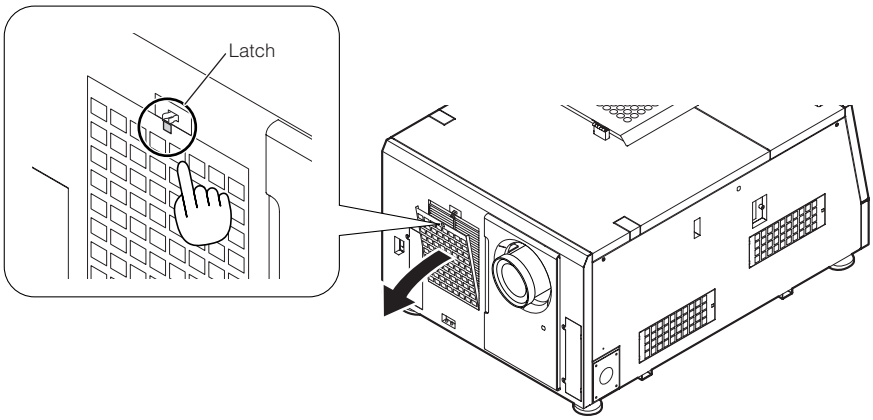

4 Replace with new air filters.

Look for an arrow indicating the installation direction on the side of the air filter. Place the filter so that the arrow is pointing down at the projector.

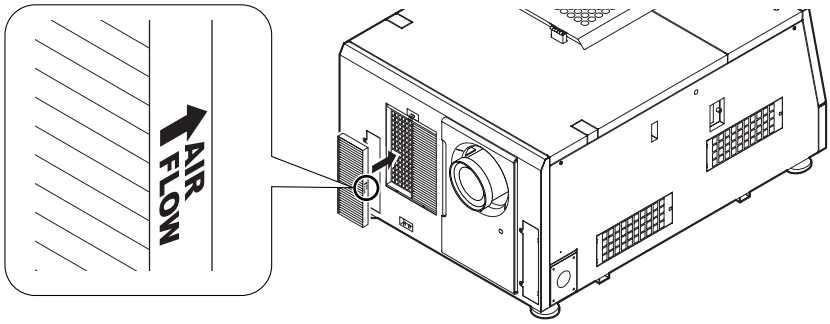

5 Mount the filter cover.

Align two fasteners on the filter cover to the holes on the projector, and push in until the latch clicks.

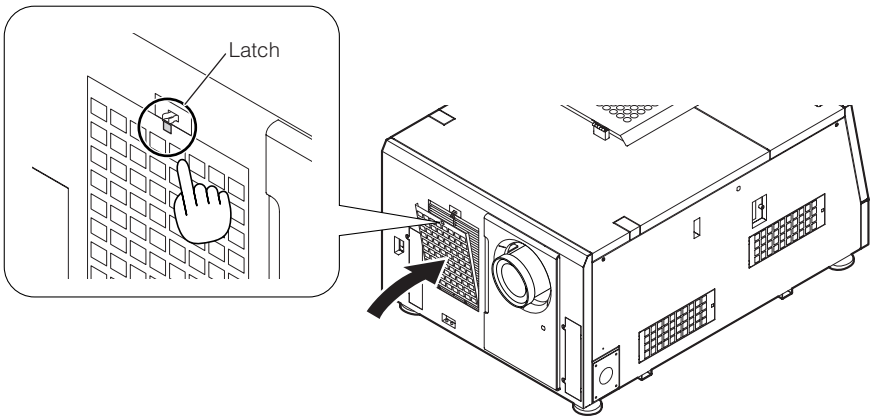

6 Mount the air inlet cover.

Align the catches on the bottom of the air inlet cover with the protrusions on the projector, and push in until the latch clicks to mount the air inlet cover.

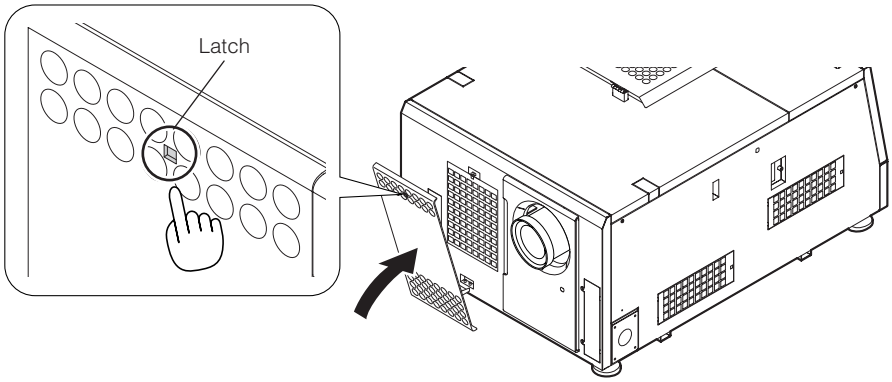

This completes replacement of the air filters for the projector air inlet on the front.

5-3-3. Replacing air filters for the projector air inlets on the side

Prepare the optional NC-80AF02 to replace air filters for the projector air inlets on the side. The NC-80AF02 contains four replacement air filters. Two air filters (one each for two air inlets) are required for the projector air inlets on the side.

1 Turn off the power to the projector.

2 Remove the filter cover.

Push the latch until it clicks to unlock the filter cover.

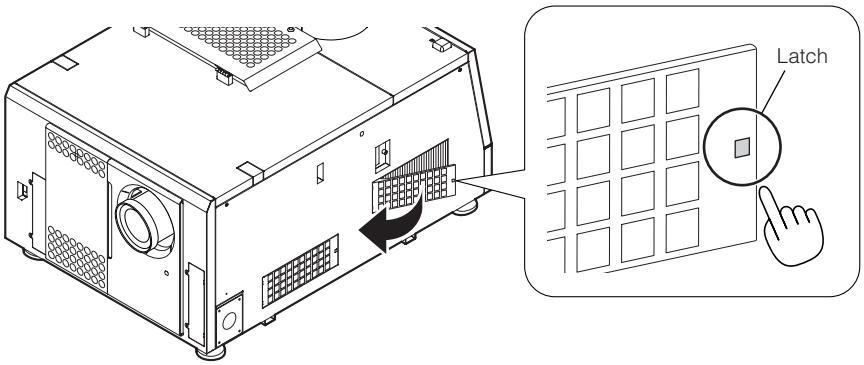

3 Replace with new air filters.

Look for an arrow indicating the installation direction on the side of the air filter. Place the filter so that the arrow is pointing down at the projector.

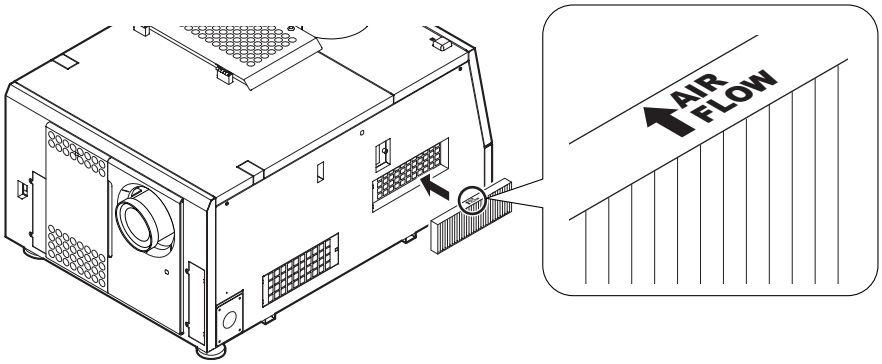

4 Mount the filter cover.

Align two fasteners on the filter cover to the holes on the projector, and push in until the latch clicks.

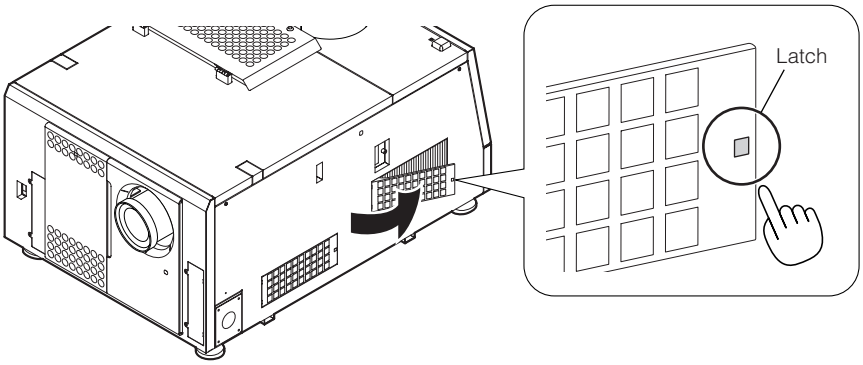

5 Repeat Step 2 to 4 to replace one more air filter.

This completes replacement of the air filters for the projector air inlets on the side.

NEC